DRAWER BOX CONSTRUCTION

All wood, very durable.

The four-sided drawer box is constructed of ⅝" hardwood with dovetail corner joints. All surfaces are sealed and topcoated. A captive nominal ¼" plywood drawer bottom is surfaced with durable, easy-to-clean melamine.

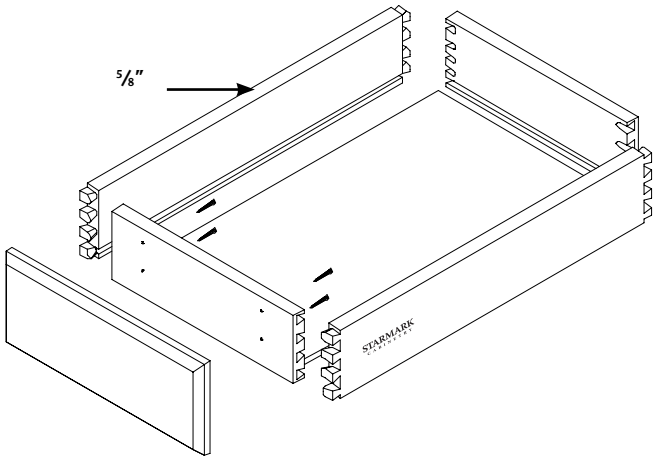

The perfect complement to full extension undermount runners, soft close steers even fully loaded drawers to a smooth, silent closure. No rattle of silverware. No crash and thud each time the utensil drawer shuts. **Just a smooth, silent operation where the drawer closes itself the final two inches and rests securely in place.**

DRAWER GLIDE SYSTEM

Full extension, self-closing, and so-o-o quiet.

Drawer glides are soft close, featuring full extension and quiet, self-closing track system. The drawer glides are undermounted to the drawer box to virtually eliminate any drawer hardware from being visible.

Each glide includes ball-bearing movement and an automatic closing feature to ensure smooth and positive operation. Glides are mounted to the rear of each cabinet with mounting sockets, automatically centering the drawer for proper drawer alignment. Release triggers are located under the drawer box for detaching a drawer from the glides.

Each drawer glide system is rated at 100 pounds.

undermount full extension
⅝" drawer material
soft close

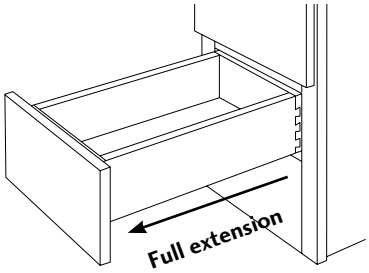

FULL EXTENSION ROLL TRAYS

The four-sided roll tray is constructed of nominal ⅝" hardwood with dovetail corner joints. All surfaces are sealed and topcoated. A captive nominal ¼" plywood bottom is surfaced with durable, easy-to-clean melamine.

Roll tray glides are soft close, featuring full extension and quiet, self-closing track system. The roll tray glides are undermounted to virtually eliminate any hardware from being visible.

Each glide includes ball-bearing movement and an automatic closing feature to ensure smooth and positive operation. This roll tray system is rated at 100 pounds.

Trimmer pilasters means an inch more storage in each tray. Pilasters are predrilled every 1½" for adjustment with just a screwdriver.

© Copyright StarMark Cabinetry FEBRUARY 2022

1. END PANELS

¾" thick unfinished veneer core plywood glued and stapled into face frame dadoes for rigidity. Wall, base, and utility cabinets are bored to receive adjustable shelf supports. There is a ¼" reveal behind the frame: see top view diagram on page S-3.

OPTIONS

- Finished end panels: block 9020. When you specify a Tinted Varnish, a Tinted Varnish with glaze, and specialty colors that have a Tinted Varnish base, for example, Homestead or Amaretto, the end panel will have MDF crossband as the exterior ply. This material assures the best possible finish. To create a Finished end panel, in all species, we use an end panel that has MDF crossband as the secondary ply. This material assures the best surface for the exterior veneer to be applied to, and this in turn results in the best possible finish.
- Furniture end panels: block 9030. This eliminates the ¼" reveal. When you specify a Tinted Varnish, a Tinted Varnish with glaze, and specialty colors that have a Tinted Varnish base, for example, Homestead or Amaretto, the end panel will have MDF crossband as the exterior ply. This material assures the best possible finish.
- Flush end panels: block 9040. This eliminates the ¼" reveal. When you specify a Tinted Varnish, a Tinted Varnish with glaze, and specialty colors that have a Tinted Varnish base, for example, Homestead or Amaretto, the end panel will have MDF crossband as the exterior ply. This material assures the best possible finish.
- Beaded Flush end panels: block 9045. This modification replaces a cabinet's standard end panel with ¾" veneer MDF core to eliminate the ¼" reveal. The end panel features decorative beads.

2. TOPS & BOTTOMS

Cabinet tops and bottoms are nominal ½" veneer core plywood. They are surfaced with natural birch melamine (for added moisture resistance and cleanability) on the interior and exterior. They are glued to the face frame dado and end panel dado, then glued and stapled into the backrail for rigidity.

3. BACKS

Backs are nominal ¼" plywood with veneer exterior and natural birch melamine interior. Backs are secured to the backrail rabbet and end panel rabbet with staples and glue.

OPTIONS

- Finished Back block 9410. The standard back is replaced with a ¾" veneer core plywood panel that has been finished. Perfect for when the back of the cabinet will be visible, such as island and peninsula applications.
- Finished Panel Back block 9420. The standard back is replaced with an Authentic Desk Island panel (wainscot).

4. BACKRAIL

Backrails are nominal ½" thick veneer core plywood rabbeted to receive tops, bottoms and backs.

5. FACE FRAMES

Face frames are ¾" thick select solid hardwood. Rails and stiles are joined with concealed screws and glue. Rails and stiles are dadoed to receive end panels, tops and bottoms.

6. SHELVES

Wall and base shelves are ¾" thick hardwood plywood surfaced with natural birch melamine. Wall shelves are full depth. Base shelves are two-thirds depth.

All wall cabinet shelves and base cabinet shelves are adjustable. Matching edge banding is attached to front of shelf.

Cabinets ordered with Finished Veneer interiors receive ¾" thick plywood shelves with veneer on both sides. The shelves receive finish, sealer and top coat.

OPTIONS

- Full depth shelves: block 9460

7. TOE BOARDS

Toe boards are unfinished nominal ½" thick veneer core plywood, stapled to and located between the end panels. Plywood (veneer) toe board trim (block 12200) is recommended to cover the toe boards.

- Toe Kick height is 4"
- Toe Kick recess is 2⅝"

8. INTERIOR

Cabinet interiors are surfaced with natural birch melamine.

OPTIONS

- Cabinets ordered with Finished Veneer interiors (block 9480) have hardwood veneer on the interior. It is finished, sealed and topcoated. The shelves are plywood veneer.
- Cabinets ordered with Maple Natural Veneer Interior (block 9470) have maple natural veneer on all interior surfaces—top, bottom, shelves, side panels, back panel and drawer bottom. Tops and bottoms of wall cabinets have maple natural veneer on the exterior.

9. HINGES

A six-way adjustable concealed hinge with soft close is standard on all Modern and Traditional overlay doors. The hinge has a quick and easy cam adjustment. It adjusts up and down, left and right, and in and out. The door will have a 106 degree swing.

10. SUPPORT RUNNERS

Support Runners (not corner blocks) are used on standard base cabinets for added stability.

StarMark Cabinetry uses veneer core hardwood plywood for end panels, tops and bottoms. Compare our material to other cabinetry companies.

© Copyright StarMark Cabinetry FEBRUARY 2022

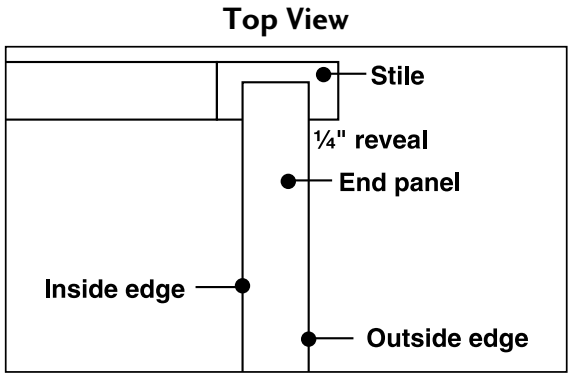

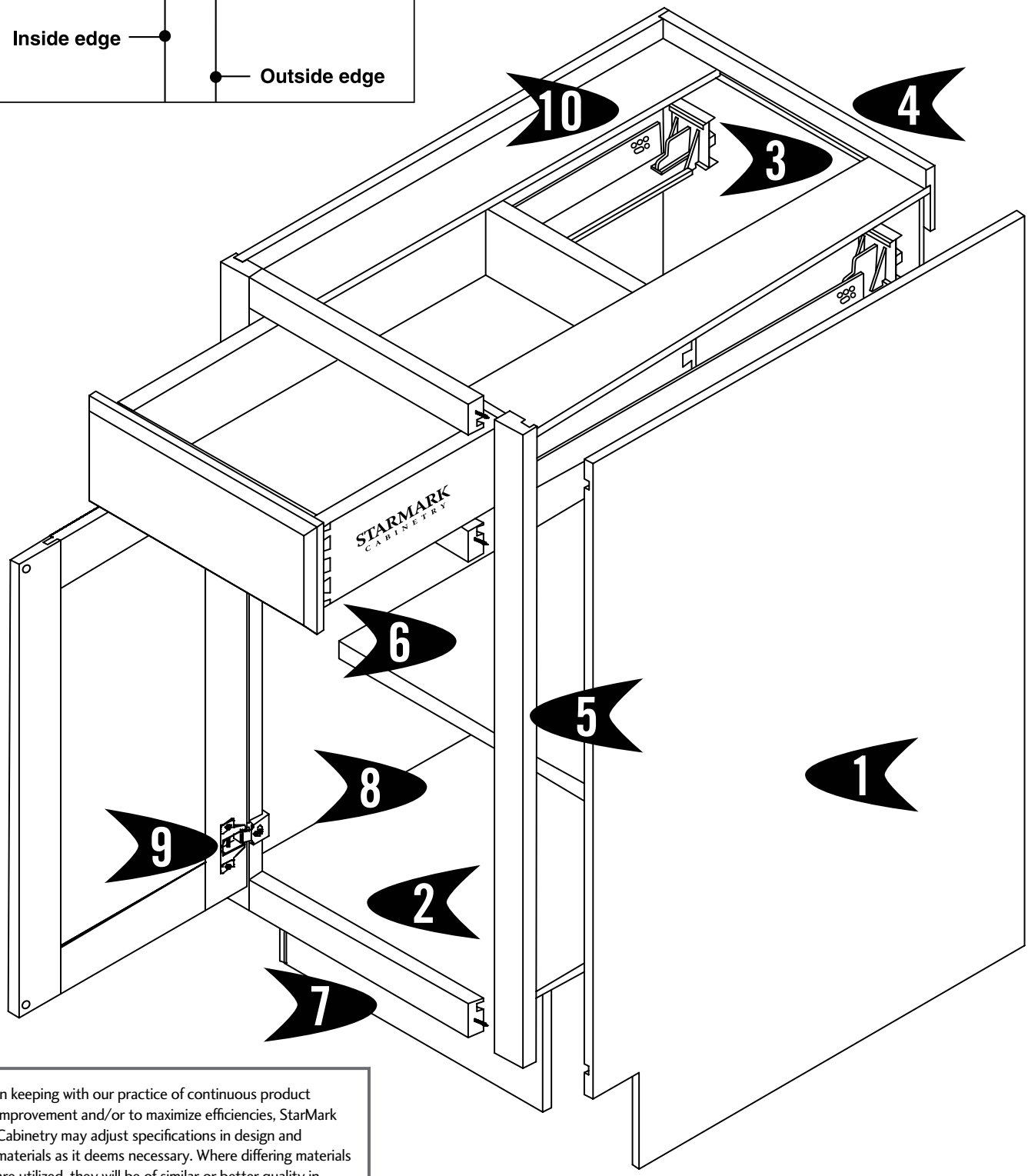

In keeping with our practice of continuous product improvement and/or to maximize efficiencies, StarMark Cabinetry may adjust specifications in design and materials as it deems necessary. Where differing materials are utilized, they will be of similar or better quality in keeping with StarMark Cabinetry's commitment to quality.

© Copyright StarMark Cabinetry FEBRUARY 2022

SPECIES CHARACTERISTICS

All woods will darken and mellow with age. Also, variation is one of the inherent beauties of wood. Because of this, the grain, texture and color of any sample will vary from any other sample. Variations will be more apparent when viewing larger samples, displays, and entire rooms of cabinetry.

Alder

Alder is a soft hardwood with a fine, straight grain and even texture. Color is light brown with a yellow or reddish tinge. When you compare alder's heartwood with its sapwood, there is insignificant color difference. Alder does not evolve in color or darken when exposed to light or heat as other woods do. Alder takes stains and finishes well. It is one of the softest hardwoods so it can be damaged easily. Some small tight knots can be found with standard Alder.

Door Styles	See charts on pages S-145–147.
NOTE	See box below for information on Modifications and Accessories when used in an Alder order.

NOTE THIS ABOUT ALDER CABINETRY
Many accessories are available in Alder. If an accessory is not available in Alder, in many cases Cherry can be successfully substituted. We will note that in the DESIGN CONSIDERATIONS section of the item. In very few cases, there is no Alder option, and we don't recommend Cherry as a substitute.

Rustic Alder

Rustic Alder will have "character" spots (knot, burl, blemish, etc.) on the center panels, and they may also be on the stiles and rails of the door, and on the drawer header, which could impact hardware placement. Knots, if they appear, will be sound and will be closed. At certain angles, light could be visible through the knot. Alder is one of the softest hardwoods so it can be damaged easily.

Door Styles	See charts on pages S-145–147.
NOTE	See box above for information on Modifications and Accessories when used in a Rustic Alder order.

NOTES/CAUTIONS

1. A Finish Expectations form, signed by you and the client, should be secured at the time of sale and kept in your files for possible future use. The Finish Expectations form is found on OneTouch in Forms, within the Orders section.
2. PLEASE NOTE: On Rustic orders, the doors and drawer headers are Rustic. Cabinets without doors (including hoods and bookcases) are built with standard Alder.

Cherry

Cherry displays a distinctive grain pattern and warm color shadings, ranging from nearly white to dark reddish brown. Dark pockets, pin knots and random streaks are common. More than most woods, cherry will darken when exposed to light, especially in light stains.

Door Styles	See charts on pages S-139–140.

Hickory

Hickory is a heavy, strong hardwood known for flowing, vibrant grain patterns and dramatic color variation. Hickory can also exhibit random pecks, burls and mineral streaks. Hickory's color ranges across a wide spectrum, from nearly white to dark brown.

Door Styles	See charts on pages S-141–142.

Rustic Hickory

Doors created from Rustic Hickory will have "character" spots (knot, burl, blemish, etc.) on the center panels. Character spots may also be on the stiles and rails of the door, and on the drawer header, which could impact hardware placement. Knots, if they appear, will be sound and will be closed. At certain angles, light could be visible through the knot.

Door Styles	See charts on pages S-141–142.

NOTES/CAUTIONS

1. A Finish Expectations form, signed by you and the client, should be secured at the time of sale and kept in your files for possible future use. The Finish Expectations form is found on OneTouch in Forms, within the Orders section.
2. PLEASE NOTE: On Rustic orders, the doors and drawer headers are Rustic. Cabinets without doors (including hoods and bookcases) are built with standard Hickory.

© Copyright StarMark Cabinetry FEBRUARY 2022

Maple

Maple is a versatile hardwood with a fine, smooth grain. Maple varies in color from nearly white to a slightly reddish brown. Mineral or sugar streaks occur naturally in maple and can vary from piece to piece. This is more noticeable in lighter stains.

Door Styles	See charts on pages S-136–138.

MDF

NEW!

Medium-density fiberboard (MDF) is an engineered wood product made by breaking down hardwood or softwood residuals into wood fibers, often in a defibrator, combining it with wax and a resin binder, and forming it into panels by applying high temperature and pressure. MDF is generally more dense than plywood. It is made up of separated fibers, but can be used as a building material similar in application to plywood. It is stronger, and more dense, than particle board.

Door Style	Tama
	See chart on page S-156.

Oak

Oak is a strong hardwood with a long, linear grain, often displaying tiny rays. Oak, at times, has small pinholes and tight knots. Oak coloration can range from a golden blond to deeper tones. This is known as Flat Sawn, which shows a different grain pattern than Quarter Sawn Oak even though they are the same species.

Door Styles	See charts on pages S-148–151.

Quarter Sawn Oak

Quarter Sawn Oak is milled at an angle 60 to 90 degrees from the grain allowing rays and flecks to become visible, giving the wood unique character and dimension. Oak coloration can range from a golden blond to deeper tones.

Door Styles	See charts on pages S-152–154.
NOTE	See page S-7 for information on Modifications and Accessories when used in a Quarter Sawn Oak order

Walnut

Walnut is a strong, stable American hardwood known for wide color variation. It ranges in color from creamy white to a medium purplish brown. Walnut cabinetry will have both flowing grain and straight grain. This combination is a treasured characteristic of Walnut, and is showcased when Walnut is finished in Natural. However, Walnut takes all available stains well. Walnut is a favorite choice for furniture and furniture grade cabinetry, such as StarMark Cabinetry.

Door Styles	See charts on page S-155.
Upcharge	25%

NOTES/CAUTIONS

1. A Finish Expectations form, signed by you and the client, should be secured at the time of sale and kept in your files for possible future use. The Finish Expectations form is found on OneTouch in Forms, within the Orders section.

© Copyright StarMark Cabinetry FEBRUARY 2022

CONSTRUCTION OF QUARTER SAWN OAK CABINETRY

- The cabinet will be built with Quarter Sawn Oak face frame.
- If Finished Veneer Interior (STIN, block 9480) is specified, an open cabinet will be built with Quarter Sawn Oak veneer on the inside of cabinet as well as on the shelves.
- Please make note of the construction of these cabinets:
  - on the Criss Cross Wine Rack, the lattice work will be Flat Sawn Oak
  - on the Plate Rack, the plate ladder will be Flat Sawn Oak

CABINET MODIFICATIONS IN QUARTER SAWN OAK CABINETRY

DESIGN CONSIDERATIONS

- If you modify a Quarter Sawn Oak cabinet with these options

MDP	9050
IMDP	9060
P	9280
Finished Ends	9020
Flush Ends	9040
Furniture Ends	9030
Beaded Flush End	9045

the modification will be manufactured in Quarter Sawn Oak.

- Any modification that is integral to the Face Frame will be accomplished with Quarter Sawn Oak. All of those modifications are found in section 9000. Examples include: WTR, WBR, VTR, ES, WS, TT, BESSD and FLV.

ACCESSORIZING QUARTER SAWN OAK CABINETRY

The following items will be built with Quarter Sawn Oak.

Nomenclature	Block #
ACCM8	12280
LC8	12410
LCCM8	12400
LFLAT8	12690
ACCORB	13450
TBT	12200
All Valances	12000/12010
All Hoods	2500
Stanisci Hoods	2530
in block 2670	2535
by Custom	2600
Quote	2650

The following products are not available in Quarter Sawn Oak; however, because of the size and cut of these items, they will work well with Quarter Sawn Oak cabinetry.

Nomenclature	Block #
SHOE8	12550
COVE8	12420
CORN8	12650
FLAT8	12680
SCM8	12220
TAPFT	13490
TAPLG	13500

DOOR AND DRAWER MODIFICATIONS IN QUARTER SAWN OAK CABINETRY

DESIGN CONSIDERATIONS

- If you modify a Quarter Sawn Oak door with these blocks

ID	9500
THORID	9520
GD	9590

the stiles and rails will be Quarter Sawn Oak.

- If you modify a Quarter Sawn Oak door with these options

MD	9530
MS2	9540
MS3	9550
4 LITE	9560
PMD	9570
MQ	9527
CUSTOM MULLION DOORS	9580

the stiles and rails will be Quarter Sawn Oak and the mullions will be Flat Sawn Oak.

© Copyright StarMark Cabinetry FEBRUARY 2022

Finish Characteristics

Palette Information

The Glaze palette is Chocolate, Ebony, Latte and Nickel.

The Tinted Varnish palette is Black, Blueberry, Bottle Green, Breeze, Buttercream, Capri, Creekstone, Crystal Fog, Currant, Dove, Frost, Graphite, Ivory Cream, Macadamia, Marshmallow Cream, Mineral Gray, Moon Bay, Moss Green, Mushroom, Pearl, Pebble Gray, Peppercorn, Portabella, Repose Grey, Sage, Shale, Simply White, Stone, White, Wild Honey and Wings.

The Antiquity palette is Fog, Driftwood, Oregano, Peppercorn and Slate.

The Chateaux palette is Brittany, Cappuccino, Nutmeg, Oregano and Toffee.

The Homestead palette is Blueberry and Fog.

The Villa palette is Black, Breeze Ebony, Capri Ebony, Green, Ivory, Marshmallow, Marshmallow Nickel, Mushroom and Pearl.

The Weathered/Weathered Snow palette is listed on page S-19.

Specialty finishes have characteristics that cannot be captured on a color chip, so color chips are not available in Amaretto, Antiquity, Chateaux, Cottage, Homestead, Old World Distressing, Villa and Weathered/Weathered Snow. Please request a door sample to view these unique, beautiful finishes.

SPECIALTY FINISHES NEW!

Always review all finish characteristics. Pay close attention to those shaded in gray!

Standard Characteristics	Stain	Stain with Glaze	Tinted Varnish	Tinted Varnish with Glaze	Cottage	Amaretto	Villa	Chateaux	Old World Distressing	Homestead	Antiquity	Weathered/Weathered Snow
Furniture Finish	•	•	•	•	•	•	•	•	•	•	•	•
No Spattering			•	•	•	•	•	•	•	•	•	•
Distressing						•		•	•	•		
No Distressing			•				•				•	•
Rounded Corners /Worn Edges					•	•		•	•	•		
Rub Through on Flat Surfaces						•						
Wire Brushing												•
Worm Holes								•	•	•		
Rasping								•	•	•		
Dips								•	•	•		
Knife Cuts								•	•	•		
Chiseling										•		
Speckling								•				
Padding								•				
Options												
Matte Top Coat	•	•			•†			•	•†		•†	•†
Spattering	•	•										
No Spattering	•	•										
Distressing	•	•	•	•	•							
No Distressing	•	•		•	•							

Your order **will** receive standard characteristics unless you specify otherwise.

These SPECIALTY FINISHES have features that are a "package." The characteristics cannot be deleted or added to.

† Matte Top Coat only available on Stain-based finishes.

Finish Characteristics of Doors and Drawer Headers

Characteristics described below apply to these cabinetry products:

Doors, Drawer headers, Insert doors, Mission doors, Mullion doors, Prairie Mullion doors, Thornton doors, any door applied to a panel, and Appliance Panels.

Characteristic	Application to door and drawer header
A. Spattering	Randomly applied to the face and edges of doors and drawer headers.
B. Distressing	Light chain distressing is randomly hand-applied to the face and edges of doors and drawer headers.
C. Glaze	Hand-applied to the face and edges of doors and drawer headers.
D. Speckling	Randomly applied to the face and edges of doors and drawer headers.
E. Rounded Corners/ Worn Edges	The corners of doors and drawer headers and the edges of raised panel doors and five piece headers are sanded to expose wood and the base color. The effect and amount of sanding will vary according to the door's profile. A clear top coat is applied.
F. Rub Through on Flat Surfaces	Areas of the door's center panel, stiles and rails, and areas of the drawer header's center panel are randomly selected for sanding. The sanding will expose the base color. A clear top coat is applied.
G. Wire Brushing	Applied to the face of doors and drawer headers. Mullion strips on Mullion Doors do **not** receive wire brushing.

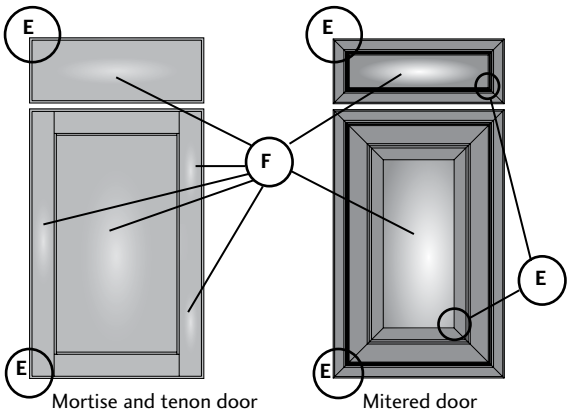

Mortise and tenon door

Mitered door

! A sample door remains the best way to illustrate door and drawer header finish characteristics.
We encourage you to order a 13x16 sample door, FF&D sample door or strapped sample door.

© Copyright StarMark Cabinetry FEBRUARY 2022

FINISH CHARACTERISTICS

Room Characteristics

Cabinetry Item	Stain		Stain with Glaze			Tinted Varnish with Glaze		SPECIALTY FINISHES								
								Amaretto			Cottage			Villa	Antiquity	Weathered/Weathered Snow NEW
	Light Chain Distressing*	Spattering*	Light Chain Distressing*	Glazing	Spattering*	Light Chain Distressing*	Glazing	Light Chain Distressing	Rounded Corners/Worn Edges	Rub Through	Light Chain Distressing	Glazing	Rounded Corners/Worn Edges	Villa Treatment	Glazing	Wire Brushing
1. ADIP	X	X	X	X	X	X	X	X	X	X	X	X	X	X	X	X
2. Arch Valance: Raised Panel	X	X	X	X	X	X	X	X	X	X	X	X	X	X	X	
3. Bracket Feet		X		X	X		X	X		X	X	X		X	X	
Face Frames for Inset	X	X	X	X	X	X	X	X		X	X	X		X	X	
Face Frames		X		X	X		X					X		X	X	
4.Finished & Furniture End Panels		X		X	X		X					X		X	X	X
5. Flushed End Panels		X		X	X		X					X		X	X	
Filler Caps	X	X	X	X	X	X	X	X	X	X	X	X	X	X	X	X
Fillers		X		X	X		X					X		X	X	
6. Fireplace Surrounds	X	X	X	X	X	X	X	X	X	X	X	X	X	X	X	X
7. Furniture Skirt		X		X	X		X	X		X	X	X		X	X	X
8. Hoods	X	X	X	X	X	X	X	X	X	X	X	X	X	X	X	
9. Insert and Mullion Doors**	X	X	X	X	X	X	X	X	X	X	X	X	X	X	X	X
10. IMDP	X	X	X	X	X	X	X	X	X	X	X	X	X	X	X	X
11. MDP	X	X	X	X	X	X	X	X	X	X	X	X	X	X	X	X
12. Moulding	X	X	X	X	X	X	X	X		X	X	X		X	X	X†
13. Decorative Accents	X	X	X	X	X	X	X	X	X	X	X	X	X	X	X	
14. Finished Veneer Interiors		X		X	X		X			X		X		X	X	X
15. Stained Interior Shelves		X		X	X		X			X		X		X	X	X
16. Turned Posts	X	X	X	X	X	X	X	X	X	X	X	X	X	X	X	
17. Columns	X	X	X	X	X	X	X	X	X	X	X	X	X	X	X	
18. Valances	X	X	X	X	X	X	X	X		X	X	X		X	X	
19. Wood Tops ■	X	X	X	X	X	X	X	X	X	X	X	X	X	X	X	X
20. PSH ■	X	X	X	X	X	X	X	X	X	X	X	X	X	X	X	X
21. FPWS ■	X	X	X	X	X	X	X	X	X	X	X	X	X	X	X	X
22. WFS ■	X	X	X	X	X	X	X	X	X	X	X	X	X	X	X	X

* Optional Finish Characteristics

Glazing is applied to the front only of all doors, including mullion doors and insert doors and all drawer headers.

Numbered cabinetry items (at left) shown in room layout on page S-10.

† Not all mouldings are available in Weathered. See page S-19.

** Mullion strips on Mullion Doors finished in Weathered do **not** receive wire brushing.

■ Solid trim/edging only (if applicable).

© Copyright StarMark Cabinetry FEBRUARY 2022

FINISH CHARACTERISTICS

Room Characteristics

	SPECIALTY FINISHES (continued)																										
	Chateaux									Old World Distressing									Homestead								
Cabinetry Item	Dips	Light Chain Distressing	Knife Cuts	Padding	Rasping	Rounded Corners/Worn Edges	Speckling	Worm Holes		Dips	Light Chain Distressing	Glazing Glaze Finishes Only	Knife Cuts	Rasping	Rounded Corners/Worn Edges	Rub Through Amaretto Only	Worm Holes		Dips	Light Chain Distressing	Glazing	Knife Cuts	Rasping	Rounded Corners/Worn Edges	Rub Through	Abundant Worm Holes	Chiseling
1. ADIP	X	X	X	X	X	X	X	X		X	X	X	X	X	X	X	X		X	X	X	X	X	X	X	X	X
2. Arch Valance: Raised Panel	X	X	X	X	X	X	X	X		X	X	X	X	X	X	X	X		X	X	X	X	X	X	X	X	X
3. Bracket Feet	X	X		X	X		X	X		X	X	X		X		X	X		X	X	X		X		X	X	
Face Frames for Inset		X					X				X	X								X	X						
Face Frames							X					X									X						
4. Finished End Panels							X					X									X						
5. Flushed Finished End Panels							X					X									X						
Filler Caps	X	X	X	X	X	X	X	X		X	X	X	X	X	X	X	X		X	X	X	X	X	X	X	X	X
Fillers							X					X									X						
6. Fireplace Surrounds	X	X		X	X	X	X	X		X	X	X		X	X	X	X		X	X	X		X	X	X	X	X
7. Furniture Skirt	X	X		X	X		X	X		X	X	X		X		X	X		X	X	X		X		X	X	
8. Hoods	X	X		X	X	X	X	X		X	X	X		X	X	X	X		X	X	X		X	X	X	X	X
9. Insert and Mullion Doors	X	X	X	X	X	X	X	X		X	X	X	X	X	X	X	X		X	X	X	X	X	X	X	X	X
10. IMDP	X	X	X	X	X	X	X	X		X	X	X	X	X	X	X	X		X	X	X	X	X	X	X	X	X
11. MDP	X	X	X	X	X	X	X	X		X	X	X	X	X	X	X	X		X	X	X	X	X	X	X	X	X
12. Moulding		X		X			X				X	X				X				X	X				X		
13. Decorative Accents	X	X		X	X	X	X	X		X	X	X		X		X	X		X	X	X		X		X	X	
14. Finished Veneer Interiors				X			X					X				X					X				X		
15. Stained Interior Shelves				X			X					X				X					X				X		
16. Turned Posts	X	X	X	X	X	X	X	X		X	X	X	X	X	X	X	X		X	X	X	X	X	X	X	X	X
17. Columns	X	X	X	X	X	X	X	X		X	X	X	X	X	X	X	X		X	X	X	X	X	X	X	X	X
18. Valances	X	X		X	X		X	X		X	X	X		X		X	X		X	X	X		X		X	X	
19. Wood Tops ■	X	X	X	X	X	X	X	X		X	X	X	X	X	X	X	X		X	X	X	X	X	X	X	X	X
20. PSH ■	X	X	X	X	X	X	X	X		X	X	X	X	X	X	X	X		X	X	X	X	X	X	X	X	X
21. FPWS ■	X	X	X	X	X	X	X	X		X	X	X	X	X	X	X	X		X	X	X	X	X	X	X	X	X
22. WFS ■	X	X	X	X	X	X	X	X		X	X	X	X	X	X	X	X		X	X	X	X	X	X	X	X	X

Glazing is applied to the front only of all doors, including mullion doors and insert doors and all drawer headers.

Numbered cabinetry items (above) shown in room layout on page S-10.

■ Solid trim/edging only (if applicable).

© Copyright StarMark Cabinetry FEBRUARY 2022

FINISH CHARACTERISTICS

Room Characteristics

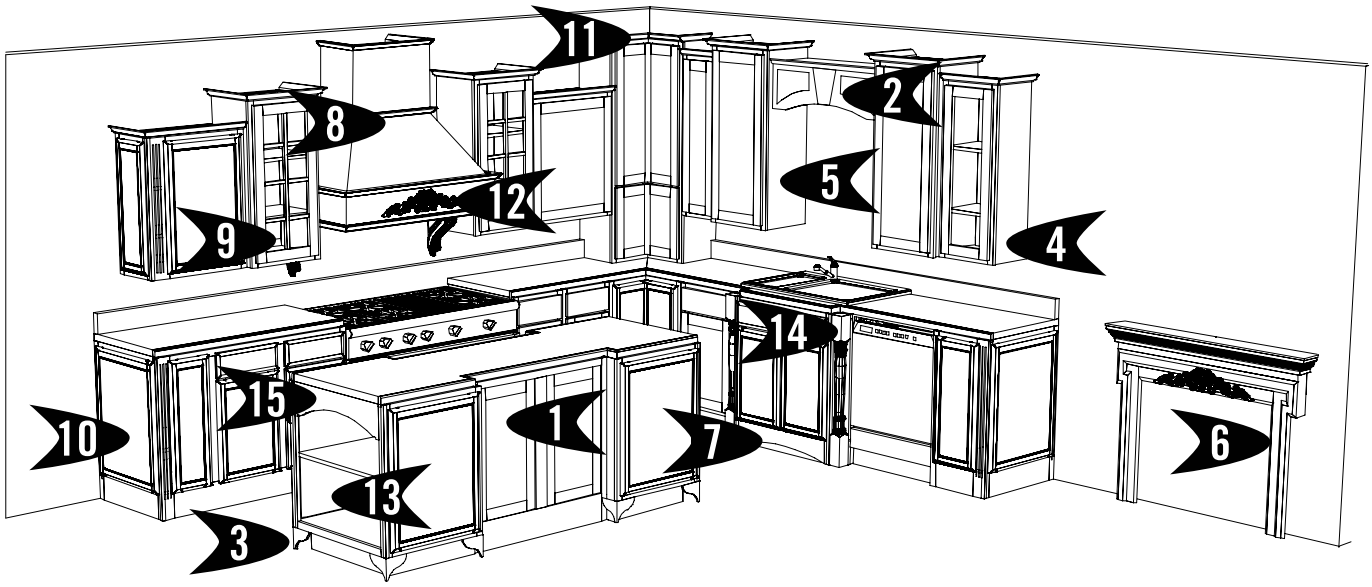

1. ADIP

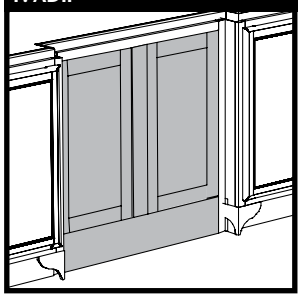

2. Arched Valance: Raised Panel

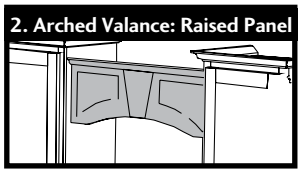

3. Bracket Feet

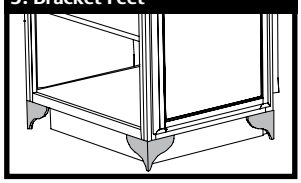

4. Finished End Panels

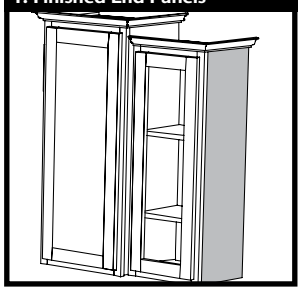

5. Flushed & Furniture End Panels

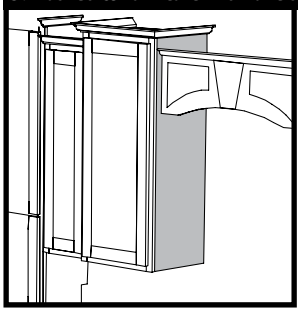

6. Fireplace Surrounds

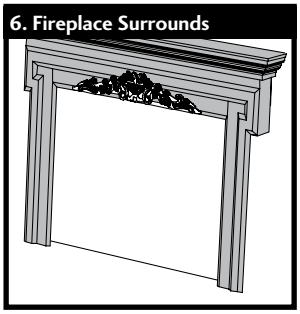

7. Furniture Skirt

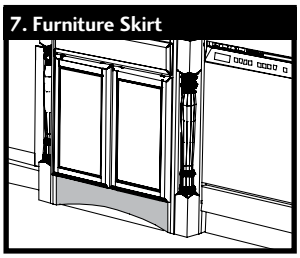

8. Hoods

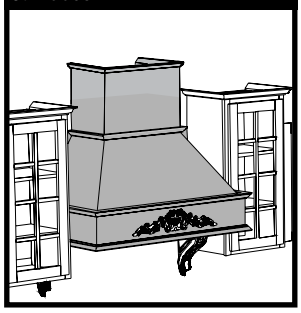

9. Insert and Mullion Doors

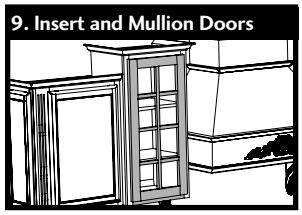

10. MDP

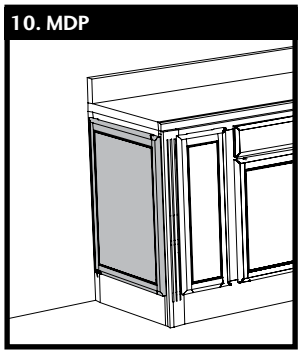

11. Moulding

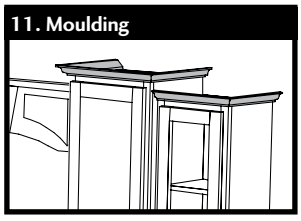

12. Decorative Accents

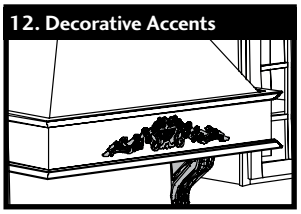

13. Finished Veneer Interiors

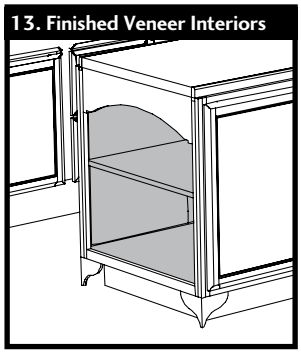

14. Turned Posts

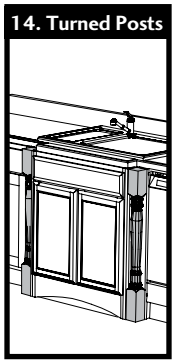

15. Valances

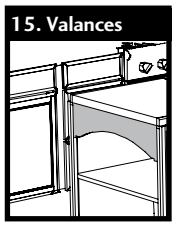

© Copyright StarMark Cabinetry FEBRUARY 2022

FINISH CHARACTERISTICS OLD WORLD DISTRESSING

To achieve the appearance of randomly worn cabinetry, not all components will receive all of the available distressing techniques.

	Distressing Techniques						Finish Characteristics
Fronts	Light Chain Distressing	Rounded Corners/ Worn Edges	Worm Holes	Rasping	Dips	Knife Cuts*	Rub Through**
All Doors ID/MD	X	X	X	X	X	X	X
Headers	X	X	X	X	X	X	X
Standard Frames							
Standard Frames Inset only	X						
Frame Modifications							
Wide Stiles WS	X†		X				
Extended Stiles ES	X†		X				
Valance Top Rail VTR	X†		X				X
Valance Bottom Rail VBR	X†		X				X
Fluting Treatment FLUT	X		X				X
Wide Top Rail WTR	X		X				X
Wide Bottom Rail WBR	X		X				X
Toe Treatment TT-SKT	X		X				X
Base Extend Stile Side Down BESSD							
Flush Void FLV							
Interior Modifications							
Finished Veneer Interior STIN							X
Beaded Back BBACK							X
End Panel Options							
Standard End Panel							
Flush End Panel FFL/FFR							
Furniture End Panel FNL/FNR							
Matching Decorator Panel MDP	X	X	X	X	X	X	X
Integrated Matching Decorator Panel IMDP	X	X	X	X	X	X	X
Authentic Desk Island Panel ADIP	X	X	X	X	X	X	X
Accessories							
Filler Caps	X	X	X	X	X	X	X
Raised Panel Arch Valance	X	X	X	X	X	X	X
Turned Post	X	X	X	X	X	X	X
Solid Stock	X		X	X	X		X
Mantel	X	X	X	X	X		X
Fireplace Surround	X	X	X	X	X		X
Wood Top (edging only)			X	X	X		X
Decorative Accents	X		X	X	X		X
Hoods	X	X	X	X	X		X
Valances	X		X	X	X		X
BIU/BIA - Turned Posts and Valance	X	X	X	X	X		X
Bun Feet	X	X	X	X	X	X	X
Bracket Feet	X		X	X	X		X
Furniture Skirt	X		X	X	X		X
Beaded Panel							X
Columns/Panel Boxes - Face	X	X	X	X	X	X	X
1. Standard Moulding	X						X
2. Accent Moulding							X
Fillers							

***Knife Cuts may be located at joints to simulate cracks; be assured that structural integrity is maintained.**
****Amaretto Only**
† Inset Only
1. Standard moulding blocks 12220-12440, 12550-12650, 12660-12750.
2. Accent moulding blocks 12200, 12460, 12655, 12760-12950.

FINISH CHARACTERISTICS CHATEAUX

To achieve the appearance of randomly worn cabinetry, not all components will receive all of the available distressing techniques.

	Distressing Techniques						Finish Characteristics	
Fronts	Light Chain Distressing	Rounded Corners/ Worn Edges	Worm Holes	Rasping	Dips	Knife Cuts*	Padding	Speckling
All Doors ID/MD	X	X	X	X	X	X	X	X
Headers	X	X	X	X	X	X	X	X
Standard Frames								
Standard Frames Inset only	X						X	X
Frame Modifications								
Wide Stiles WS	X†		X					
Extended Stiles ES	X†		X					
Valance Top Rail VTR	X†		X				X	X
Valance Bottom Rail VBR	X†		X				X	X
Fluting Treatment FLUT	X		X				X	X
Wide Top Rail WTR	X		X				X	X
Wide Bottom Rail WBR	X		X				X	X
Toe Treatment TT-SKT	X		X				X	X
Base Extend Stile Side Down BESSD								
Flush Void FLV								
Interior Modifications								
Finished Veneer Interior STIN							X	X
Beaded Back BBACK							X	X
Open Cabinets								
Frame	X		X				X	X
Interior - End Panel and Back								
Plywood Finished Veneer Interior Shelving								
Shelving with Decorative Edge (Edge Only)			X	X	X		X	X
End Panel Options								
Standard End Panel								
Flush End Panel FFL/FFR								
Furniture End Panel FNL/FNR								
Matching Decorator Panel MDP	X	X	X	X	X	X	X	X
Integrated Matching Decorator Panel IMDP	X	X	X	X	X	X	X	X
Authentic Desk Island Panel ADIP	X	X	X	X	X	X	X	X
Accessories								
Filler Caps	X	X	X	X	X	X	X	X
Raised Panel Arch Valance	X	X	X	X	X	X	X	X
Turned Post	X	X	X	X	X	X	X	X
Solid Stock	X		X	X	X		X	X
Mantel	X	X	X	X	X		X	X
Fireplace Surround	X	X	X	X	X		X	X
Wood Top (edging only)			X	X	X		X	X
Decorative Accents	X		X	X	X		X	X
Hoods	X	X	X	X	X		X	X
Valances	X		X	X	X		X	X
BIU/BIA - Turned Posts and Valance	X	X	X	X	X		X	X
Bun Feet	X	X	X	X	X	X	X	X
Bracket Feet	X		X	X	X		X	X
Furniture Skirt	X		X	X	X		X	X
Beaded Panel							X	X
Columns/Panel Boxes - Face	X	X	X	X	X	X	X	X
1. Standard Moulding	X						X	X
2. Accent Moulding							X	X
Fillers							X†	X†

***Knife Cuts may be located at joints to simulate cracks; be assured that structural integrity is maintained.**
† Inset Only
1. Standard moulding blocks 12220-12440, 12550-12650, 12660-12750.
2. Accent moulding blocks 12200, 12460, 12655, 12760-12950.

© Copyright StarMark Cabinetry FEBRUARY 2022

FINISH CHARACTERISTICS

Stains

Stains are a semi-transparent penetrating alkyd stain that is applied and hand-wiped into the wood. A high-solids, catalyzed sealer is applied. It is air-dried and oven-dried and hand-sanded to a smooth finish. A clear top coat is applied. The finish is oven cured for durability.

Species	Alder	Rustic Alder	
	Cherry		
	Hickory	Rustic Hickory	
	Maple		
	Oak	Quarter Sawn Oak	
	Walnut		
Options	Light Chain Distressing		
	No Light Chain Distressing		
	Spattering		
	No Spattering		
	Matte Top Coat		
Palette	See charts on pages S-136–155		
Door Styles	Available on all wood door styles		
Upcharges	Light Chain Distressing	10%	page S-13
	Spattering	10%	page S-13
	Matte Top Coat	5%	page S-13

NEW!

HOW TO ORDER A STAIN

- Specify the Stain in the Finish Box on the first page of the Order Form.
- To price, enter each upcharge as a separate line item and apply any upcharges to the entire order.
- Check the options you want in the STYLING OPTIONS box, found on the first page of the Order Form.

★ Spattering and Distressing are available with any stain. These options dramatically increase the number of "looks" you can offer your clients.

Glaze over a Stain

Glazes are hand-applied. Glazing is most apparent in contours where "hang-up" can occur. Doors with less detailed profiles will show less hang-up. A clear top coat is applied. The finish is oven cured for durability.

Compare our glazing coverage to other cabinet companies. We apply glaze to the ENTIRE door front, the face frame, drawer header, all finished ends and finished veneer interiors in the order for just one upcharge.

Chocolate Glaze Generally darker than unglazed wood, Chocolate Glaze creates warm brown tones and highlights the door's detailing.

Ebony Glaze Ebony Glaze provides a subtle unifying black tone in the grain, in door details and in moulding elements for the cool color palette.

Latté Glaze Latté Glaze washes the entire wood surface with a creamy taupe tone and highlights detailing with a taupe hang-up.

Nickel Glaze Nickel Glaze adds a cool, subdued pewter tone.

Species	Alder	Rustic Alder	
	Cherry		
	Hickory	Rustic Hickory	
	Maple		
	Oak	Quarter Sawn Oak	
Options	Light Chain Distressing		
	No Light Chain Distressing		
	Spattering		
	No Spattering		
	Matte Top Coat		
Palette	See charts on pages S-136–155.		
Door Styles	Available on all wood door styles		
Upcharges	Glazing	10%	page S-12
	Light Chain Distressing	10%	page S-13
	There is no upcharge for Matte Top Coat or Spattering on a Stain with Glaze.		page S-13

NEW!

HOW TO ORDER A GLAZED STAIN

- Check the options you want in the STYLING OPTIONS box.
- Specify the Glazed Stain as a separate line item.
- To price, apply the upcharge to the entire order.
- A Finish Expectations form, signed by you and the client, should be secured at the time of sale and kept in your files for possible future use. The Finish Expectations form is found on OneTouch in Forms, within the Orders section.

© Copyright StarMark Cabinetry FEBRUARY 2022

FINISH CHARACTERISTICS

Light Chain Distressing

Light chain distressing is randomly applied, primarily to fronts and edges of doors and drawer headers. Light chain distressing is done prior to applying finish. Light chain distressing promotes an "aged" look, and offers another place for glaze to hang up.

Species	Alder	Rustic Alder
	Cherry	
	Hickory	Rustic Hickory
	Maple	
	Oak	Quarter Sawn Oak
	Walnut	
Palette	All stains, all glazed stains, all Tinted Varnish and all Tinted Varnish glaze.	
Door Styles	Available on all wood door styles	
Upcharge	10%	
	There is no upcharge for Light Chain Distressing on a Tinted Varnish with Glaze.	

HOW TO ORDER DISTRESSING

- Check DISTRESSING in the STYLING OPTIONS box, found on the first page of the Order Form.
- Specify DISTRESSING as a separate line item.
- To price, apply the upcharge to the entire order.

Spattering

Spattering is a dark stain, hand applied randomly to the cabinet. The best way to describe the effect of spattering is to imagine lightly coating a toothbrush's bristles with dark paint, and then running your thumb over it to spatter the paint.

Species	Alder	Rustic Alder
	Cherry	
	Hickory	Rustic Hickory
	Maple	
	Oak	Quarter Sawn Oak
	Walnut	
Palette	All stains and all glazed stains	
Door Styles	Available on all wood door styles	
Upcharge	10%	
	There is no upcharge for Spattering on a Stain with Glaze.	

HOW TO ORDER SPATTERING

- Check SPATTERING in the STYLING OPTIONS box, found on the first page of the Order Form.
- Specify SPATTERING as a separate line item.
- To price, apply the upcharge to the entire order.

Matte Top Coat

NEW!

Matte Top Coat is a less reflective finish than our standard sheen. One way to describe Matte Top Coat is to use terms from the paint industry. A satin or flat option is comparable to Matte Top Coat, and semi-gloss is comparable to our standard sheen.

Species	Alder	Rustic Alder
	Cherry	
	Hickory	Rustic Hickory
	Maple	
	Oak	Quarter Sawn Oak
	Walnut	
Palette	Stains Stain with Glaze Stain with Glaze with Old World Distressing Stain with Glaze with Cottage Distressing Weathered Stain with Glaze combinations Chateaux Brittany Chateaux Cappuccino Chateaux Nutmeg Chateaux Oregano Chateaux Toffee Antiquity Driftwood Antiquity Oregano Antiquity Slate	
Door Styles	Available on all wood door styles	
Upcharge	5%	
	There is no upcharge for Matte Top Coat on a Stain with Glaze or on any finish with an upcharge already applied.	

HOW TO ORDER SPATTERING

- Check MATTE TOP COAT in the STYLING OPTIONS box, found on the first page of the order form.
- Specify MATTE TOP COAT as a separate line item
- To price, apply the upcharge to the entire order

© Copyright StarMark Cabinetry FEBRUARY 2022

FINISH CHARACTERISTICS

Tinted Varnish

Three tinted coats of catalyzed material are uniformly applied to Maple, Oak and Quarter Sawn Oak cabinetry. Light sanding between coats assures a smooth finish. The finish is oven cured for durability.

Species	Maple, Oak, Quarter Sawn Oak
Standard	No spattering
Options	No light chain distressing Light Chain Distressing
Palette	See charts on pages S-137, S-149, S-153, S-156
Door Styles	Available on Maple, Oak and Quarter Sawn Oak door styles.
Upcharge	5%

NOTES/CAUTIONS

1. To get the best possible finish, we use an end panel with an exterior layer of MDF crossband on Flush end panels (block 9040), Finished end panels (block 9020) and Furniture end panels (block 9030). In addition, veneered center panels in doors are replaced with HDO material, solid 3/8" reverse flat panels and solid 5/8" raised panels in doors are replaced with 100% MDF, and the Tabor door is constructed with 100% MDF. If you specify STIN (block 9480), the back panel will be HDO material. Toe Board Trim (block 12200) will also be HDO material. These materials assure the best possible finish.

HOW TO ORDER TINTED VARNISH

- Specify the finish as a separate line item.
- To price, apply the upcharge to the entire order.
- A Finish Expectations form, signed by you and the client, should be secured at the time of sale and kept in your files for possible future use. The Finish Expectations form is found on OneTouch in Forms, within the Orders section.

★ Compare our glazing coverage to other cabinet companies. We apply glaze to the ENTIRE door front, the face frame, drawer header, all finished ends and finished veneer interiors in the order for just one upcharge.

Glazes over Tinted Varnish

Glazes are hand-applied. Glazing is most apparent in contours where "hang-up" can occur. Doors with less detailed profiles will show less hang-up. A clear top coat is applied. The finish is oven cured for durability.

Chocolate Glaze Generally darker than unglazed wood, Chocolate Glaze creates warm brown tones and highlights the door's detailing.
Latté Glaze Latté Glaze washes the entire wood surface with a creamy taupe tone and highlights detailing with a taupe hang-up.
Nickel Glaze Nickel glaze adds a cool, subdued pewter tone.

Species	Maple, Oak, Quarter Sawn Oak
Standards	No spattering
Options	Light Chain Distressing No Light Chain Distressing
Palette	See charts on pages S-137–138, S-149–150, S-153–154
Door Styles	Available on Maple, Oak and Quarter Sawn Oak door styles.
Upcharge	15% There is no upcharge for Distressing on a Tinted Varnish with Glaze.

NOTES/CAUTIONS

1. To get the best possible finish, we use an end panel with an exterior layer of MDF crossband on Flush end panels (block 9040), Finished end panels (block 9020) and Furniture end panels (block 9030). In addition, veneered center panels in doors are replaced with HDO material, solid 3/8" reverse flat panels and solid 5/8" raised panels in doors are replaced with 100% MDF, and the Tabor door is constructed with 100% MDF. If you specify STIN (block 9480), the back panel will be HDO material. Toe Board Trim (block 12200) will also be HDO material. These materials assure the best possible finish.

HOW TO ORDER TINTED VARNISH WITH GLAZE

- Specify the finish as a separate line item.
- To price, apply the upcharge to the entire order.
- Check the options you want in the STYLING OPTIONS box on the Order Form.
- A Finish Expectations form, signed by you and the client, should be secured at the time of sale and kept in your files for possible future use. The Finish Expectations form is found on OneTouch in Forms, within the Orders section.

© Copyright StarMark Cabinetry FEBRUARY 2022

FINISH CHARACTERISTICS

AMARETTO

Amaretto is black tinted varnish. The finish is rubbed to expose the wood. A Butterscotch tone is applied to accent the wood and door profiles. There are rounded corners and worn edges on center panels. A clear top coat is applied. The finish is oven cured for durability.

Species	Maple
Standards	No spattering Light chain distressing Rounded Corners/Worn Edges Rub Through
Options	None available
Maple Door Styles	See charts on pages S-137–138 for doors styles available in Maple.
Upcharge	15%

NOTES/CAUTIONS

1. Because it's a hand-rubbed technique, there will be variations in the intensity of the rub-through and the distressing. To sell this finish, we recommend showing your customer a sample door. A color chip is not available.
2. There is an extended lead time for orders containing Amaretto. See your Cycle Ship for more information. We distribute Cycle Ship approximately every four weeks.
3. To get the best possible finish, we use an end panel with an exterior layer of MDF crossband on Flush end panels (block 9040), Finished end panels (block 9020) and Furniture end panels (block 9030). In addition, veneered center panels in doors are replaced with HDO material, solid 3/8" reverse flat panels and solid 5/8" raised panels in doors are replaced with 100% MDF. If you specify STIN (block 9480), the back panel will be HDO material. Toe Board Trim (block 12200) will also be HDO material. These materials assure the best possible finish.

HOW TO ORDER AMARETTO

- Specify AMARETTO as a separate line item.
- To price, apply the upcharge to the entire order.
- A Finish Expectations form, signed by you and the client, should be secured at the time of sale and kept in your files for possible future use. The Finish Expectations form is found on OneTouch in Forms, within the Orders section.

ANTIQUITY

Antiquity is available on Alder and Rustic Alder. Ebony glaze is applied, wiped by hand and brushed. A clear top coat is applied. This finish is oven cured for durability.

Species	Alder Rustic Alder
Standards	No distressing No spattering
Options	Matte Top Coat available on Antiquity Driftwood, Oregano and Slate.
Palette	Driftwood Fog Oregano Peppercorn Slate
Alder Door Styles	See chart on S-145 for door styles available in Alder.
Upcharge	15%

NOTES/CAUTIONS

1. Because it's a hand-applied technique, there will be variations in the intensity and look of the glazing. To sell this finish, we recommend showing your customer a sample door.
2. There is an extended lead time for orders containing Antiquity. See your Cycle Ship for more information. We distribute Cycle Ship approximately every four weeks.

HOW TO ORDER ANTIQUITY

- Specify ANTIQUITY as a separate line item.
- To price, apply the upcharge to the entire order.
- A Finish Expectations form, signed by you and the client, should be secured at the time of sale and kept in your files for possible future use. The Finish Expectations form is found on OneTouch in Forms, within the Orders section.

© Copyright StarMark Cabinetry FEBRUARY 2022

FINISH CHARACTERISTICS

CHATEAUX

Chateaux is created by randomly applying several distressing techniques, softening all edges, padding the edges to create shadowing, and adding speckling to accentuate the distressing. A clear top coat is applied. The finish is oven cured for durability.

Species	Cherry
Standards	Dips Light Chain Distressing Knife Cuts Padding Rasping Rounded Corners/Worn Edges Speckling Worm Holes No spattering
Options	Matte Top Coat
Palette	Brittany Cappuccino Nutmeg Oregano Toffee
Cherry Door Styles	See chart on page S-139 for door styles available in Cherry.
Upcharge	15%

NOTES/CAUTIONS

1. Occasionally there will be a knife mark on a joint. The structural integrity of the joint is not affected by the knife mark.
2. There is an extended lead time for Chateaux orders. See your Cycle Ship for more information. We distribute Cycle Ship approximately every four weeks.

HOW TO ORDER CHATEAUX

- Specify the CHATEAUX finish in the Finish Box on the first page of the Order Form.
- To price, enter the CHATEAUX upcharge as a separate line item and apply to the entire order.
- Include a floor plan with your order. A floor plan will help us achieve the overall look of CHATEAUX in the room. See page S-11 for Chateaux Room Finish Characteristics.
- Because it's a hand-applied technique, there will be variations. To sell this finish, we recommend that you show your customer a door and header sample (Strapped or SAMPB) of the style and finish. Each sample door will contain all the distressing techniques; however, not every door in a kitchen will contain all the distressing techniques.
- A Finish Expectations form, signed by you and the client, should be secured at the time of sale and kept in your files for possible future use. The Finish Expectations form is found on OneTouch in Forms, within the Orders section.

To speckle the Chateaux finish, a subtle stain in dark brown is randomly applied across the surface of the finish. These spots will be no larger than the diameter of a pencil eraser.

COTTAGE

Cottage is created by sanding through the finish to expose the raw wood underneath and adding glaze to bring out the wood's unique texture. There are rounded corners and worn edges on center panels. Cottage is available with or without light chain distressing and this must be specified on the Cabinetry Order Form. A clear top coat is applied. The finish is oven cured for durability.

Species	Alder Cherry Hickory Maple Oak Quarter Sawn Oak Rustic Alder Rustic Hickory	
Standards	No spattering Rounded Corners/Worn Edges	
Options	Light Chain Distressing No Light Chain Distressing Matte Top Coat available on Stain with Glaze.	
Palette	Tinted Varnish with Glaze Stain with Glaze	
Door Styles	Available on all wood door styles with the exception of Tabor.	
Upcharge	Tinted Varnish with Glaze Stain with Glaze	15% 15%

NOTES/CAUTIONS

1. Because it's a hand-rubbed technique, there will be variations in the intensity of the rub-through and the distressing. To sell this finish, we recommend showing your customer a sample door.
2. There is an extended lead time for orders containing Cottage. See your Cycle Ship for more information. We distribute Cycle Ship approximately every four weeks.
3. When specifying Cottage without a glaze, we highly recommend showing your customer a sample door, to illustrate the exposed raw wood look.

HOW TO ORDER COTTAGE

- Specify COTTAGE as a separate line item.
- To price, apply the upcharge to the entire order.
- On the Cabinetry Order form, you must specify Cottage with Distressing or Cottage w/o Distressing.
- A Finish Expectations form, signed by you and the client, should be secured at the time of sale and kept in your files for possible future use. The Finish Expectations form is found on OneTouch in Forms, within the Orders section.

© Copyright StarMark Cabinetry FEBRUARY 2022

FINISH CHARACTERISTICS

HOMESTEAD

Homestead is available on Alder and Rustic Alder door styles. Several distressing techniques are applied randomly and heavily. A glaze is applied, wiped and brushed. Drawer and door corners are rounded. A clear top coat is applied. This finish is oven cured for durability.

Species	Alder Rustic Alder
Standards	Dips Light Chain Distressing Knife Cuts Chiseling Rasping Rounded Corners/Worn Edges Abundant Worm Holes No spattering
Options	None available
Palette	Blueberry Fog
Alder Door Styles	See chart on page S-147 for Alder door styles available in Homestead.
Upcharge	15%

NOTES/CAUTIONS

1. Occasionally there will be a knife mark on a joint. The structural integrity of the joint is not affected by the knife mark.
2. Please note that the amount of worm holes is considerably more than the amount found on Chateaux or Old World Distressing.
3. There is an extended lead time for Homestead orders. See your Cycle Ship for more information. We distribute Cycle Ship approximately every four weeks.
4. To get the best possible finish, we use an end panel with an exterior layer of MDF crossband on Flush end panels (block 9040), Finished end panels (block 9020) and Furniture end panels (block 9030). In addition, veneered center panels in doors are replaced with HDO material, solid 3/8" reverse flat panels and solid 5/8" raised panels in doors are replaced with 100% MDF. If you specify STIN (block 9480), the back panel will be HDO material. Toe Board Trim (block 12200) will also be HDO material. These materials assure the best possible finish.

HOW TO ORDER HOMESTEAD

- Specify the HOMESTEAD finish in the Finish Box on the first page of the Order Form.
- To price, enter the HOMESTEAD upcharge as a separate line item and apply to the entire order.
- Because it's a hand-applied technique, there will be variations. To sell this finish, we recommend that you show your customer a door and header sample (Strapped or SAMPB) of the style and finish. Each sample door will contain all the distressing techniques; however, not every door in a kitchen will contain all the distressing techniques.
- A Finish Expectations form, signed by you and the client, should be secured at the time of sale and kept in your files for possible future use. The Finish Expectations form is found on OneTouch in Forms, within the Orders section. For many homeowners, Homestead, because of the heavy distressing, would best be used as an accent color in a design (island, hood, etc), instead of being the main color. If it is being used as the main color, please note, a room of heavily distressed cabinetry is a rustic/primitive look, and may not be what the homeowner wants to achieve.

FINISH CHARACTERISTICS HOMESTEAD

To achieve the appearance of randomly worn cabinetry, not all components will receive all of the available distressing techniques.	Distressing Techniques						
	Light Chain Distressing	Rounded Corners/Worn Edges	Abundant Worm Holes	Rasping	Dips	Knife Cuts*	Chiseling
Fronts							
All Doors ID/MD	X	X	X	X	X	X	X
Headers	X	X	X	X	X	X	X
Standard Frames							
Standard Frames Inset only	X						
Frame Modifications							
Wide Stiles WS	X†		X				X
Extended Stiles ES	X†		X				X
Valance Top Rail VTR	X†		X				X
Valance Bottom Rail VBR	X†		X				X
Fluting Treatment FLUT	X		X				X
Wide Top Rail WTR	X		X				X
Wide Bottom Rail WBR	X		X				X
Toe Treatment TT-SKT	X		X				X
Base Extend Stile Side Down BESSD							
Flush Void FLV							
Interior Modifications							
Finished Veneer Interior STIN							
Beaded Back BBACK							
End Panel Options							
Standard End Panel							
Flush End Panel FFL/FFR							
Furniture End Panel FNL/FNR							
Matching Decorator Panel MDP	X	X	X	X	X	X	X
Integrated Matching Decorator Panel IMDP	X	X	X	X	X	X	X
Authentic Desk Island Panel ADIP	X	X	X	X	X	X	X
Accessories							
Filler Caps	X	X	X	X	X	X	X
Raised Panel Arch Valance	X	X	X	X	X	X	X
Turned Post	X	X	X	X	X	X	X
Solid Stock	X		X	X	X		X
Mantel	X	X	X	X	X		X
Fireplace Surround	X	X	X	X	X		X
Wood Top (edging only)			X	X	X		X
Decorative Accents	X		X	X	X		X
Hoods	X	X	X	X	X		X
Valances	X		X	X	X		X
BIU/BIA - Turned Posts and Valance	X	X	X	X	X		X
Bun Feet	X	X	X	X	X	X	X
Bracket Feet	X		X	X	X		X
Furniture Skirt	X		X	X	X		X
Beaded Panel							
Columns/Panel Boxes - Face	X	X	X	X	X	X	X
1. Standard Moulding	X						
2. Accent Moulding							
Fillers						X†	X†

***Knife Cuts may be located at joints to simulate cracks; be assured that structural integrity is maintained.**

† Inset Only

1. Standard moulding blocks 12220-12440, 12550-12650, 12660-12750.

2. Accent moulding blocks 12200, 12460, 12655, 12760-12950.

© Copyright StarMark Cabinetry FEBRUARY 2022

OLD WORLD DISTRESSING

Old World is created by randomly applying several distressing techniques, softening all edges, and adding a glaze to accentuate the distressing. A clear top coat is applied. The finish is oven cured for durability.

Species	Alder Cherry Hickory Maple Oak Quarter Sawn Oak Rustic Alder Rustic Hickory
Options	Matte Top Coat available on Stain with Glaze.
Standards	Dips Knife Cuts Light Chain Distressing No spattering Rasping Rounded Corners/Worn Edges Worm Holes
Palette	See charts on pages S-138, S-140, S-142, S-144, S-146, S-151, S-154
Door Styles	Available on all wood door styles, with the exception of Tabor
Upcharge	15%

NOTES/CAUTIONS

1. Occasionally there will be a knife mark on a joint. The structural integrity of the joint is not affected by the knife mark.
2. There is an extended lead time for Old World Distressing orders. See your Cycle Ship for more information. We distribute Cycle Ship approximately every four weeks.

HOW TO ORDER OLD WORLD DISTRESSING

- In addition to specifying a finish, write OLD WORLD DISTRESSING in the Finish Box on the first page of the Order Form.
- To price, enter the OLD WORLD DISTRESSING upcharge as a separate line item and apply to the entire order.
- Include a floor plan with your order. A floor plan will help us achieve the overall look of Old World in the room. See page S-11 for Old World Distressing Room Finish Characteristics.
- Because it's a hand-applied technique, there will be variations. To sell this finish, we recommend that you show your customer a door and header sample (Strapped or SAMPB) of the style, finish and wood specie. Each sample door will contain all the distressing techniques; however, not every door in a kitchen will contain all the distressing techniques.
- A Finish Expectations form, signed by you and the client, should be secured at the time of sale and kept in your files for possible future use. The Finish Expectations form is found on OneTouch in Forms, within the Orders section.

VILLA

The process used to create the Villa finish results in a look that suggests brush strokes along the face of the doors and drawers and any other finished part of the order. Variation of color and brush stroke technique will appear from door to door and will blend throughout the kitchen. To create Villa, the base coat is tinted varnish and a coat of glaze is applied in such a way to suggest brush strokes. A clear top coat is applied. The finish is oven cured for durability.

Species	Maple
Standards	No distressing No spattering
Options	None available
Palette	Black Breeze Ebony NEW! Capri Ebony NEW! Green Ivory Marshmallow Marshmallow Nickel Mushroom Pearl
Maple Door Styles	See chart on page S-137 for doors styles available in Maple.
Upcharge	15%

NOTES/CAUTIONS

1. Because it's a hand-applied technique, there will be variations in the intensity and look of the brush stroke. To sell this finish, we recommend showing your customer a sample door.
2. There is an extended lead time for orders containing Villa. See your Cycle Ship for more information. We distribute Cycle Ship approximately every four weeks.
3. To get the best possible finish, we use an end panel with an exterior layer of MDF crossband on Flush end panels (block 9040), Finished end panels (block 9020) and Furniture end panels (block 9030). In addition, veneered center panels in doors are replaced with HDO material, solid 3/8" reverse flat panels and solid 5/8" raised panels in doors are replaced with 100% MDF, and the Tabor door is constructed with 100% MDF. If you specify STIN (block 9480), the back panel will be HDO material. Toe Board Trim (block 12200) will also be HDO material. These materials assure the best possible finish.
4. Brush stroke is horizontal on slab drawer headers and on the center panel of five-piece drawer headers. Brush stroke is vertical on Hampton and Lafayette five-piece drawer header center panels.

HOW TO ORDER VILLA

- Specify VILLA as a separate line item.
- To price, apply the upcharge to the entire order.
- A Finish Expectations form, signed by you and the client, should be secured at the time of sale and kept in your files for possible future use. The Finish Expectations form is found on OneTouch in Forms, within the Orders section.

© Copyright StarMark Cabinetry FEBRUARY 2022

WEATHERED/ WEATHERED SNOW

NEW!

Weathered is available on Oak, on select door styles. Weathered is a wire brush technique that removes soft grain, resulting in substantial texture on the door and drawer header. The Weathered texture is applied to the face of doors, drawer headers and finished end panels. When a Stain with Glaze or Tinted Varnish with Glaze is specified, glaze is applied and wiped by hand. A clear top coat is applied. The finish is oven cured for durability.

Species	Oak		
Standards	Wire brushing No spattering No distressing		
Options	Matte Top Coat		
Palette	See charts on pages S-150 and S-156		
Oak Door Styles	Accord Breckenridge Coralville Hanover Lehigh Ridgeville Stockton Ventura	Bonita Clifton Fullerton Harrison Renwick Roanoke Tipton	
MDF Door Style	Tama (available in Weathered only)		
Mouldings	ACCM STOP MCM MBRM BCE LSCRS LFLAT	CM MBMB MBFM DCE FLAT LSCRL MTBT	TACM LCM SHOE LSMBD LSMPW LSML
Upcharge	15%		

NOTES/CAUTIONS

- When a Stain with Glaze or Tinted Varnish with Glaze is specified, glazing is hand applied, so expect artistic variations in the intensity and look when glaze is applied in conjunction with the Weathered texture. To sell this finish, we recommend showing your customer a sample door.
- When applied to moulding, wire brushing results depend on the type of moulding. Wire brushing will be visible on the flat surface of moulding such as Arts & Craft Crown Moulding (ACCM). On moulding that has raised profiles, such as Crown Moulding (CM), wire brushing will be evident on the raised portions, but not on the scooped portions.
- Some installations include a variety of Finished Ends and Panels. Wire brushing is applied to some, not all, Finished Ends and Panels. Please refer to the list above and make sure to educate your homeowner that not all components will have visible wire brushing texture. In addition, 48" is the maximum panel width to receive wire brushing texture.

HOW TO ORDER WEATHERED/WEATHERED SNOW

- Specify WEATHERED/WEATHERED SNOW as a separate line item.
- To price, apply the upcharge to the entire order.
- A Finish Expectations Form, signed by you and the client, should be secured at the time of sale and kept in your files for possible future use. The Finish Expectations form is found on OneTouch in Forms, within the Orders section.

WEATHERED/WEATHERED SNOW

Finished Ends with Wire Brushing

Block 9020	Finished Ends
Block 9030	Furniture Ends
Block 9050	Matching Decorator Panel
Block 9070	Face Frame and Door on Cabinet End

Panels with Wire Brushing

Block 11030	Authentic Desk Island Panel
Block 11035	FFD Back Panel
Block 11070	Panel
Block 11380	End Panel
Block 11384	FFD End Panel
Block 11504	FFD Panel Box Plain
Block 11850	Tapered Vanity End Panel

Panels (maximum width of 48") with Wire Brushing

Block 11040	Plywood Panel
Block 11045	Vertical Grain Finish Panel

© Copyright StarMark Cabinetry FEBRUARY 2022

CUSTOM STAIN

WITH OR WITHOUT GLAZE

BEFORE YOU BEGIN, YOU NEED TO KNOW:

1. Custom stain is available on all wood species.
2. Custom stain is on standard Cycle Ship, unless there are extended lead time items on the order. The time period starts at the time we enter the order (STEP FIVE). It does not start at STEP ONE.
3. There are costs.
   - Absolutely no custom finish cabinetry order is entered until we have a door sample on file that has been approved by the homeowner. A minimum of two door samples is required for order processing. The cost to finish a 13x16 door sample in a custom color is $200 Net. The cost to finish a FF&D door sample in a custom color is $300 Net.
   - Note that more than one door sample may be produced until the homeowner approves the color. We charge for every door sample produced.
   - If the cabinetry order does not total $20,000 list, a set up fee of $900 Net will apply.
   - When the cabinetry order is placed, applicable finish upcharges apply to the entire cabinetry order:

Custom Stain Upcharge	**10%**	**Custom Chateaux**	**25%**
Custom Stain with Glaze Upcharge	**20%**	**Custom Weathered (Oak only)**	**25%**
Custom Cottage on Stain with Glaze Upcharge	**25%**		
Custom Old World on Stain with Glaze Upcharge	**25%**		
Custom Distressing Upcharge	**Call**		

STEP ONE

Prepare a Sample.

Work with the homeowner to create a sample that depicts the color they desire. Color matching a stain or stain with glaze is a manual process completed by humans, not machines. This affects how useful your submitted sample will be when we use it to produce a door sample for the homeowner to approve.

❏ The optimum sample is a 3"x3" (minimum size) piece of the desired wood species finished in the desired stain. The first door sample our color technicians produce will most likely reflect what the homeowner desired. Occasionally a second door sample is needed. We charge for each door sample.

❏ Any other color samples—fabric, wallpaper, non-wood substrates, paper, flooring, tile—are open to interpretation. The first door sample our color technicians produce may accurately reflect what the homeowner desired, but more likely, it won't. Multiple door samples may be necessary to achieve what the homeowner has in mind. We charge for each door sample.

❏ Specify which of StarMark Cabinetry's glazes is to be used.

❏ Chocolate ❏ Latte
❏ Nickel ❏ Ebony ❏ **No** glaze

❏ Specify which finish is to be used.

❏ Standard ❏ Matte Top Coat

THIS IS IMPORTANT TO KNOW and to COMMUNICATE TO THE HOMEOWNER

Color matching a stain or stain with glaze is a manual process completed by humans, not machines. This affects how useful your submitted color sample will be when we use it to produce a door sample for the homeowner to approve. Multiple door samples may be necessary to achieve what the homeowner has in mind. We charge for each door sample.

STEP TWO

Determine the distressing techniques the homeowner wants.

❏ No distressing

❏ Cottage Distressing

Cottage Distressing includes 1. worn edges and 2. rounded corners. Light chain distressing is optional with Cottage Distressing. If Cottage Distressing is the homeowner's choice, please check **one** below:

❏ Light chain distressing
❏ **No** light chain distressing

❏ Old World Distressing

Old World Distressing includes 1. rounded corners 2. rasping 3. dips 4. knife cuts 5. worm holes 6. worn edges 7. light chain distressing

❏ Custom distressing. Apply only certain distressing characteristics from the list below.

❏ Dips
❏ Chiseling* (as seen in Homestead)
❏ Knife cuts
❏ Light chain distressing
❏ Padding (as seen in Chateaux)
❏ Rasping
❏ Rounded Corners/Worn Edges
❏ Rub through on flat surfaces
❏ Spattering
❏ Speckling (dark brown, as seen in Chateaux)
❏ Worm holes
❏ Wire brushing (as seen in Weathered)

* Chiseling is only available on Alder and Rustic Alder doors styles with a solid wood center panel.

© Copyright StarMark Cabinetry FEBRUARY 2022

CUSTOM STAIN

WITH OR WITHOUT GLAZE

STEP THREE

Communicate with us.

Please ship to us these two items:

1. The color sample from STEP ONE, and indicate glaze choice and distressing instructions. The shipping address is:
   TECHNICAL ASSISTANCE
   StarMark Cabinetry
   600 E. 48th Street North
   Sioux Falls, SD 57104

Shipping label files are available for print are posted on OneTouch in Forms, within the Orders section.

2. A completed Custom Quote Request Form (posted on OneTouch in Forms, within the Orders section.)

Now StarMark Cabinetry has work to do.

3a When StarMark receives your color sample and completed Custom Quote Request Form, we create a Custom Quote Number. Technical Assistance then shares that Custom Quote Number with you, so you can include it on your sample door order.

You can order either

- 13x16" sample doors ($200 Net)

–OR–

- FFD Face Frame and Door sample doors ($300 Net)

3b StarMark formulates a stain and toner.
3c StarMark will produce two door samples.
3d StarMark signs and dates two door samples.
3e StarMark ships one door sample to you. The other is retained in our color library for future reference.

NOTE: Steps 3a through 3e take two weeks from receipt of your color sample.

STEP FOUR

Review the sample door with the homeowner and have them sign the Custom Color approval form. Send the form in with the cabinetry order.

- We do not process the order until we receive the signed Custom Color approval form.
- The form must be signed and returned within 90 days of sample date.
- Due to the natural aging process of wood and finishes, Custom Color samples are only retained in our library for six months. After six months, a new sample is required.

STEP FIVE

StarMark Cabinetry enters the order. Finish upcharges are applied (see chart below), and if the order was less than $20,000 list, a custom finish set up fee of $900 Net applies.

- Promotional discounts cannot be applied to a custom finish order.
- Custom finish orders cannot be placed on rush.

Custom Stain Upcharge	**10%**
Custom Stain with Glaze Upcharge	**20%**
Custom Cottage on Stain with Glaze Upcharge	**25%**
Custom Old World on Stain with Glaze Upcharge	**25%**
Custom Chateaux	**25%**
Custom Distressing Upcharge	**Call**
Custom Weathered (Oak only)	**25%**

STEP SIX

We formulate the custom stain after the cabinetry order is released into production. StarMark Cabinetry then produces and ships the order.

Use this chart to review the characteristics you can add to your custom color.	CUSTOM COLORS			
	Custom Stain	Custom Stain with Glaze	Custom Tinted Varnish	Custom Tinted Varnish with Glaze
Distressing Packages				
Cottage with light chain distressing	•	•	•	•
Cottage without light chain distressing	•	•	•	•
Old World Distressing	•	•	•	•
Custom distressing				
Brush stroke (as seen in Villa)			•	•
Chiseling (as seen in Homestead)	•	•	•	•
Dips	•	•	•	•
Knife cuts	•	•	•	•
Light chain distressing	•	•	•	•
Padding (as seen in Chateaux)	•	•		
Rasping	•	•	•	•
Rounded corners/Worn Edges	•	•	•	•
Rub through on flat surfaces	•	•	•	•
Spattering	•	•	•	•
Speckling (with dark brown, as seen in Chateaux)	•	•		
Worm holes	•	•	•	•
Wire brushing (as seen in Weathered)	•	•		

© Copyright StarMark Cabinetry FEBRUARY 2022

CUSTOM TINTED VARNISH

WITH OR WITHOUT GLAZE

BEFORE YOU BEGIN, YOU NEED TO KNOW:

1. Custom Tinted Varnish is available on all wood species.
2. Custom Tinted Varnish is on standard Cycle Ship, unless there are extended lead time items on the order. The time period starts at the time we enter the order (STEP FIVE). It does not start at STEP ONE.
3. There are costs.
   - Absolutely no custom finish cabinetry order is entered until we have a door sample on file that has been approved by the homeowner. A minimum of two door samples is required for order processing. The cost to finish a 13x16 door sample in a custom color is $200 Net. The cost to finish a FF&D door sample in a custom color is $300 Net.
   - Note that more than one door sample may be produced until the homeowner approves the color. We charge for every door sample produced.
   - If the cabinetry order does not total $20,000 list, a set up fee of $900 Net will apply.
   - When the cabinetry order is placed, applicable finish upcharges apply to the entire cabinetry order:

Custom Tinted Varnish Upcharge	**15%**	**Custom Villa**	**25%**
Custom Tinted Varnish with Glaze Upcharge	**25%**	**Custom Distressing Upcharge**	**Call**
Custom Cottage on Tinted Varnish with Glaze Upcharge	**25%**	**Custom Weathered (Oak only)**	**25%**
Custom Homestead (Alder and Rustic Alder only)	**25%**		
Custom Old World on Tinted Varnish with Glaze Upcharge	**25%**		

STEP ONE

Obtain a color number or prepare a sample.

❏ Indicate paint brand _____
and color number _____

❏ It's highly unlikely, but a homeowner's retail paint color choice may not be stored in our computer. In that case, send the actual swatch from the fan deck. Make sure it is in good condition.

❏ If the desired color is not an existing paint, the best sample for us to work from is a 3"x3" (minimum size) piece of the desired species finished in the desired color. The first door sample our color technicians produce will most likely reflect what the homeowner desired. Occasionally a second door sample is needed. We charge for each door sample.

❏ Any other color samples—fabric, wallpaper, non-wood substrates, paper, flooring, tile—are open to interpretation. The first door sample our color technicians produce may accurately reflect what the homeowner desired, but more likely, it won't. Multiple door samples may be necessary to achieve what the homeowner has in mind. We charge for each door sample.

❏ Specify which of StarMark Cabinetry's glazes is to be used.

❏ Chocolate ❏ Latte
❏ Nickel ❏ Ebony ❏ **No** glaze

THIS IS IMPORTANT TO KNOW and to COMMUNICATE TO THE HOMEOWNER

Any color sample that is not a paint color or fan deck swatch—fabric, wallpaper, non-wood substrates, paper, flooring, tile—is open to interpretation. The first door sample our color technicians produce may accurately reflect what the homeowner desired, but more likely, it won't. Multiple door samples may be necessary to achieve what the homeowner has in mind. We charge for each door sample.

STEP TWO

Determine the distressing techniques the homeowner wants.

❏ No distressing

❏ Cottage Distressing
Cottage Distressing includes 1. worn edges and 2. rounded corners. Light chain distressing is optional with Cottage Distressing. If Cottage Distressing is the homeowner's choice, please check **one** below:
❏ Light chain distressing
❏ **No** light chain distressing

❏ Old World Distressing
Old World Distressing includes 1. rounded corners 2. rasping 3. dips 4. knife cuts 5. worm holes 6. worn edges 7. light chain distressing

❏ Custom distressing. Apply only certain distressing characteristics from the list below.
❏ Brush stroke (as seen in Villa)
❏ Chiseling* (as seen in Homestead)
❏ Dips
❏ Knife cuts
❏ Light chain distressing
❏ Rasping
❏ Rounded Corners/Worn Edges
❏ Rub through on flat surfaces
❏ Spattering
❏ Worm holes

* Chiseling only available on Alder and Rustic Alder door styles with a solid wood center panel.

PLEASE NOTE

The gloss/sheen level of the sample produced by StarMark Cabinetry may differ from the sample submitted by the homeowner.

© Copyright StarMark Cabinetry FEBRUARY 2022

CUSTOM TINTED VARNISH

WITH OR WITHOUT GLAZE

STEP THREE

Communicate with us.

Please ship to us these two items:

1. Send us the paint information, the fan deck swatch, or the color sample from STEP ONE, and indicate glaze choice and distressing instructions. The shipping address is:
   TECHNICAL ASSISTANCE
   StarMark Cabinetry
   600 E. 48th Street North
   Sioux Falls, SD 57104

Shipping label files are available for print are posted on OneTouch in Forms, within the Orders section.

2. A completed Custom Quote Request Form (posted on OneTouch in Forms, within the Orders section.)

Now StarMark Cabinetry has work to do.

3a When StarMark receives your color sample and completed Custom Quote Request Form, we create a Custom Quote Number. Technical Assistance then shares that Custom Quote Number with you, so you can include it on your sample door order.

You can order either

- 13x16" sample doors ($200 Net)

–OR–

- FFD Face Frame and Door sample doors ($300 Net)

3b When StarMark receives your color sample, Customer Service enters an order for two sample doors.
3c StarMark formulates a primer and enamel.
3d StarMark will produce two door samples.
3e StarMark signs and dates two door samples.
3f StarMark ships one door sample to you. The other is retained in our color library for future reference.

NOTE: Steps 3a through 3f take two weeks from receipt of your color sample.

STEP FOUR

Review the sample door with the homeowner and have them sign the Custom Color approval form. Send the form in with the cabinetry order.

- We do not process the order until we receive the signed Custom Color approval form.
- The form must be signed and returned within 90 days of sample date.
- Due to the natural aging process of wood and finishes, Custom Color samples are only retained in our library for six months. After six months, a new sample is required.

STEP FIVE

StarMark Cabinetry enters the order. Finish upcharges are applied (see chart below), and if the order was less than $20,000 list, a custom finish set up fee of $900 Net applies.

- Promotional discounts cannot be applied to a custom finish order.
- Custom finish orders cannot be placed on rush.

Custom Tinted Varnish Upcharge	**15%**
Custom Tinted Varnish with Glaze Upcharge	**25%**
Custom Cottage on Tinted Varnish with Glaze Upcharge	**25%**
Custom Homestead (Alder and Rustic Alder only)	**25%**
Custom Old World on Tinted Varnish with Glaze Upcharge	**25%**
Custom Villa	**25%**
Custom Distressing Upcharge	**Call**
Custom Weathered (Oak only)	**25%**

STEP SIX

We formulate the custom Tinted Varnish after the cabinetry order is released into production. StarMark Cabinetry then produces and ships the order.

Use this chart to review the characteristics you can add to your custom color.	CUSTOM COLORS			
	Custom Stain	Custom Stain with Glaze	Custom Tinted Varnish	Custom Tinted Varnish with Glaze
Distressing Packages				
Cottage with light chain distressing	•	•	•	•
Cottage without light chain distressing	•	•	•	•
Old World Distressing	•	•	•	•
Custom distressing				
Brush stroke (as seen in Villa)			•	•
Chiseling (as seen in Homestead)	•	•	•	•
Dips	•	•	•	•
Knife cuts	•	•	•	•
Light chain distressing	•	•	•	•
Padding (as seen in Chateaux)	•	•		
Rasping	•	•	•	•
Rounded corners/Worn Edges	•	•	•	•
Rub through on flat surfaces	•	•	•	•
Spattering	•	•	•	•
Speckling (with dark brown, as seen in Chateaux)	•	•		
Worm holes	•	•	•	•
Wire brushing (as seen in Weathered)	•	•		

© Copyright StarMark Cabinetry FEBRUARY 2022

FINISH EXPECTATIONS

StarMark Cabinetry is committed to the satisfaction of our customers. Therefore, it is important to us that you have realistic expectations of StarMark's fine wood cabinetry and fashion finishes, and fully understand the characteristics of the species and finishes outlined below. Your StarMark Cabinetry Dealer will review the following wood species and finish characteristics with you.

FACTORS that affect ALL WOODS and FINISHES

- **Hygroscopicity:** Wood is hygroscopic, meaning it absorbs and gives off moisture according to the humidity surrounding it, even when a finish has been applied. Because of moisture, wood shrinks and swells; this process may cause hairline fractures in the finish at the joints. (This is especially apparent with Tinted Varnish finishes.) This shrinking and swelling is normal and does not affect the structural stability or integrity of the joint construction.
- **Mellowing:** When exposed to light, most woods darken and mellow with age. Some species, especially cherry, change in color more than others. Mellowing changes the look of cabinetry. When your new cabinetry arrives for installation, the color will vary from the samples viewed in the showroom due to this aging process. Please view an updated sample, and discuss the finish, the species and your expectations with the cabinetry professional at this location. On warranty replacements, StarMark cannot guarantee an exact color match because of the mellowing process.

WOOD SPECIES CHARACTERISTICS

- The building blocks of StarMark Cabinetry products are select hardwoods and veneers in Alder, Rustic Alder, Oak, Quarter Sawn Oak, Maple, Cherry, Hickory, Rustic Hickory and Walnut. Each species has its own beauty and elegance, and, as it is machined, joined and finished into fine cabinetry, each piece reveals its individual appeal.
- Just as no two trees are alike, no two pieces of wood are alike. How and where the tree grows can affect the frequency of mineral deposits, light and dark wood, and grain patterns. This natural process will result in variations in grain and color throughout your cabinetry. The grain, texture and color of any sample will vary from another sample. Variations will be more apparent when viewing larger samples, such as entire rooms of cabinetry.
- Some species have more variation than others. Please see the descriptions for more details.
- If you desire total uniformity and perfect grain patterns, we recommend not purchasing solid wood cabinetry. If it is character, warmth and unique effects you prefer, then traditional wood cabinetry from StarMark Cabinetry should be your choice.
- StarMark Cabinetry manufactures our cabinets using an all-wood plywood box. If your order contains a Finished end panel (dealer, this is block 9020), we use an end panel with a layer of MDF. This is a superior substrate for achieving a consistent, quality finish. If you have questions about the materials used in StarMark Cabinetry, we encourage you to discuss with your dealer.

RUSTIC WOOD SPECIES ACKNOWLEDGEMENT

Rustic Alder will have "character" spots (knot, burl, blemish, etc.) on the center panels, and they may also be on the stiles and rails of the door, and on the drawer front, which could impact hardware placement. Knots, if they appear, will be sound and will be closed. At certain angles, light could be visible through the knot.

Rustic Hickory has a wide variation in color, ranging from nearly white to dark brown. There will be "character" spots (knot, burl, blemish, etc.) on the center panels, and they may also be on the stiles and rails of the door, and on the drawer front, which could impact hardware placement. Knots, if they appear, will be sound and will be closed. At certain angles, light could be visible through the knot.

StarMark Cabinetry reserves the right to change the specifications of species and finishes at any time without notice.

SPECIES ACKNOWLEDGEMENT

Alder is a soft hardwood with a fine, straight grain and even texture. Color is light brown with a yellow or reddish tinge. When you compare alder's heartwood with its sapwood, there is insignificant color difference. Alder does not evolve in color or darken when exposed to light or heat as other woods do. Alder takes stains and finishes well. It is one of the softest hardwoods so it can be damaged easily. Some small tight knots can be found with standard Alder.

Cherry displays a distinctive grain pattern and warm color shadings, ranging from nearly white to dark reddish brown. Dark pockets, pin knots and random streaks are common. More than most woods, Cherry will darken when exposed to light, especially in light stains.

Hickory is a heavy, strong hardwood known for flowing, vibrant grain patterns and dramatic color variation. Hickory can also exhibit random pecks, burls and mineral streaks. Hickory's color ranges across a wide spectrum, from nearly white to dark brown.

Maple is a versatile hardwood with a fine, smooth grain. Maple varies in color from nearly white to a slightly reddish brown. Mineral or sugar streaks occur naturally in Maple and can vary from piece to piece. This is more noticeable in lighter stains.

Medium-density fiberboard (MDF) is an engineered wood product made by breaking down hardwood or softwood residuals into wood fibers, often in a defibrator, combining it with wax and a resin binder, and forming it into panels by applying high temperature and pressure. MDF is generally more dense than plywood. It is made up of separated fibers, but can be used as a building material similar in application to plywood. It is stronger, and more dense, than particle board.

Oak is a strong hardwood with a long, linear grain, often displaying tiny rays. Oak, at times, has small pinholes and tight knots. Oak coloration can range from a golden blond to deeper tones.

Quarter Sawn Oak is milled at an angle 60 to 90 degrees from the grain allowing rays and flecks to become visible, giving the wood unique character and dimension.

Walnut is a strong, stable American hardwood known for wide color variation. It ranges in color from creamy white to a medium purplish brown. Walnut cabinetry will have both flowing grain and straight grain. This combination is a treasured characteristic of Walnut, and is showcased when Walnut is finished in Natural. However, Walnut takes all available stains well. Walnut is a favorite choice for furniture and furniture grade cabinetry, such as StarMark Cabinetry.

Continued on next page

© Copyright StarMark Cabinetry FEBRUARY 2022

LIGHT STAINS and NATURAL FINISHES FINISH ACKNOWLEDGEMENT

- Light stains and natural finishes—those with no stain applied—are translucent and magnify the natural characteristics of wood. The infinite variation in grain patterns, color and particular markings are inherent to wood and its different species. These variations are a product of nature and comprise the fundamental beauty of real wood.

DARK STAINS FINISH ACKNOWLEDGEMENT

- Dark stains—like Java and Mocha—have heavily pigmented toners that reflect light. This draws attention to finishing inconsistencies, substrate inconsistencies and the infinite variety of grain patterns and markings inherent to all species of wood.

GRAY STAINS FINISH ACKNOWLEDGEMENT

- Gray stains—like Driftwood and Slate—have heavily pigmented toners that reflect light. This draws attention to finishing inconsistencies, substrate inconsistencies and the infinite variety of grain patterns and markings inherent to all species of wood.

UNFINISHED WOOD FINISH ACKNOWLEDGEMENT

- StarMark Cabinetry will supply, upon request, unfinished product with no stain, sealer or top coat applied. We will not warranty any unfinished parts, including claims made for warpage, finish and color variation. StarMark Cabinetry and authorized StarMark Cabinetry dealers cannot be held responsible for any unfinished materials supplied.
- Even though we do not warranty unfinished items, this document does not invalidate our standard warranty for all other items on your order.

GLAZE FINISH ACKNOWLEDGEMENT

- The process of glazing begins with the hand-application of stain to bring out the beauty of the wood grain. After curing, the glaze compound is applied to several components of the cabinets in your order.
- Because of the techniques used in achieving this special finish, glaze buildup will occur around the door and drawer front edges, door panels, end grain and, to a lesser extent, flat surfaces such as some drawer overlays and center panels.
- The buildup of the glazing compound will vary from one piece to another and the variations may be dramatic. The broad variations inherent to glaze finishes are considered to be the beauty of this finish.
- Glazing is most apparent in contours where “hang-up” can occur. Doors with less detailed profiles will show less hang-up.
- We call your attention to the characteristics of glazed finishes because the effect of the variations in an entire kitchen may be different from what you witness in viewing displays or a finish sample. These variations are common in glazed finishes and will not be reason for replacement.

TINTED VARNISH FINISH ACKNOWLEDGEMENT

- Tinted Varnish finishes are distinctly different from standard finishes you may be familiar with. The best way to describe Tinted Varnish is to say it gives a painted finish. When applied to fine maple cabinetry, the grain of the wood will not show through. When applied to oak and quarter sawn oak cabinetry, the grain of the wood is visible, especially when a glaze is applied. Tinted Varnish is available on Maple, Oak and Quarter Sawn Oak door styles.
- Like other finishes, tinted varnish finishes have a coating of catalyzed varnish.
- Tinted Varnish finishes are susceptible to wear and tear from normal residential use. Solid color finishes intensify nicks, chips, dents and rub-through especially on sharp corners and edges.
- As the wood expands and contracts, hairline cracks will appear at the joints of the cabinets. The Tinted Varnish finish will also crack. (The integrity of the joints is not affected by expansion and contraction.) This cracking is a normal characteristic of Tinted Varnish finishes and will not be considered a reason for product replacement.
- Joint separation may be extreme on mitered doors and applied moulding doors, therefore Tinted Varnish finishes are not recommended for use in environments of high humidity.
- StarMark Cabinetry manufactures our cabinets using an all-wood plywood box. To get the best possible finish quality when creating cabinetry finished in Tinted Varnish, we use an end panel with a layer of MDF to create Flush end panels (dealer, this is block 9040), Finished end panels (dealer, this is block 9020), and Furniture end panels (dealer, this is block 9030). This is a superior substrate for achieving a consistent, quality finish. In addition, if the door you selected has a veneered center panel, it is replaced with a center panel made of HDO material and the Tabor door is constructed with 100% MDF. If you specify that the interior back panel of a cabinet should receive color (dealer, this is modification STIN, block 9480), the material used will be HDO material. Toe Board Trim (block 12200) will also be HDO material. These materials assure the best possible finish. If you have questions about the materials used in StarMark Cabinetry, we encourage you to discuss with your dealer.

TINTED VARNISH WITH GLAZE FINISH ACKNOWLEDGEMENT

- Tinted Varnish finishes are distinctly different from standard finishes you may be familiar with. The best way to describe Tinted Varnish is to say it gives a painted finish. When applied to fine maple cabinetry, the grain of the wood will not show through. When applied to oak and quarter sawn oak cabinetry, the grain of the wood is visible, especially when a glaze is applied. Tinted Varnish is available on Maple, Oak and Quarter Sawn Oak door styles.
- Like other finishes, tinted varnish finishes have a coating of catalyzed varnish.
- Tinted Varnish Glaze finishes are susceptible to wear and tear from normal residential use. Solid color finishes intensify nicks, chips, dents and rub-through especially on sharp corners and edges.
- As the wood expands and contracts, hairline cracks will appear at the joints of the cabinets. The Tinted Varnish Glaze finish will also crack. (The integrity of the joints is not affected by expansion and contraction.) This cracking is a normal characteristic of Tinted Varnish Glaze finishes and will not be considered a reason for product replacement.
- Joint separation may be extreme on mitered doors and applied moulding doors, therefore Tinted Varnish Glaze finishes are not recommended for use in environments of high humidity.
- StarMark Cabinetry manufactures our cabinets using an all-wood plywood box. To get the best possible finish quality when creating cabinetry finished in Tinted Varnish with Glaze, we use an end panel with a layer of MDF to create Flush end panels (dealer, this is block 9040), Finished end panels (dealer, this is block 9020), and Furniture end panels (dealer, this is block 9030). This is a superior substrate for achieving a consistent, quality finish. In addition, if the door you selected has a veneered center panel, it is replaced with a center panel made of HDO material and the Tabor door is constructed with 100% MDF. If you specify that the interior back panel of a cabinet should receive color (dealer, this is modification STIN, block 9480), the material used will be HDO material. Toe Board Trim (block 12200) will also be HDO material. These materials assure the best possible finish. If you have questions about the materials used in StarMark Cabinetry, we encourage you to discuss with your dealer.
- StarMark Cabinetry reserves the right to change the specifications of species and finishes at any time without notice.

Continued on next page

© Copyright StarMark Cabinetry FEBRUARY 2022

AMARETTO FINISH ACKNOWLEDGEMENT

- The Amaretto finish is created by 1) light chain distressing of the wood and 2) sanding and distressing through the finish to expose the raw wood underneath and rounding corners
- Because it is a hand-rubbed technique, there will be variations in the intensity of the rub-through and the distressing.
- The Amaretto finish is susceptible to wear and tear from normal residential use. Nicks, chips, dents and rub-through will be more obvious, especially on sharp corners and edges.
- We call your attention to the characteristics of Amaretto because the effect of the variations in an entire kitchen may be different from what you witness in viewing displays or a finish sample. These variations are common from door to door in an installation and will not be reason for replacement. IN ADDITION, the characteristics of Amaretto change significantly from door style to door style.
- StarMark Cabinetry manufactures our cabinets using an all-wood plywood box. To get the best possible finish quality when creating cabinetry finished in Amaretto, we use an end panel with a layer of MDF to create Flush end panels (dealer, this is block 9040), Finished end panels (dealer, this is block 9020), and Furniture end panels (dealer, this is block 9030). This is a superior substrate for achieving a consistent, quality finish. In addition, if the door you selected has a veneered center panel, it is replaced with a center panel made of HDO material. If you specify that the interior back panel of a cabinet should receive color (dealer, this is modification STIN, block 9480), the material used will be HDO material. Toe Board Trim (block 12200) will also be HDO material. These materials assure the best possible finish. If you have questions about the materials used in StarMark Cabinetry, we encourage you to discuss with your dealer.
- StarMark Cabinetry reserves the right to change the specifications of species and finishes at any time without notice.

ANTIQUITY FINISH ACKNOWLEDGEMENT

- Antiquity is available on Alder and Rustic Alder. Ebony glaze is applied, wiped by hand and brushed. A clear topcoat is applied. The finish is oven-cured for durability.
- Because of this unique hand applied glaze technique, there will be variations in the intensity of the glazing and color.
- The Antiquity is susceptible to wear and tear of normal residential use.
- We call your attention to the characteristics of Antiquity because the effect of the variations in an entire kitchen may be different from what you witness in viewing displays or a finish sample. These variations are common from door to door in an installation and will not be reason for replacement. IN ADDITION, the characteristics of Antiquity can change significantly from door style to door style.
- StarMark Cabinetry reserves the right to change the specifications of species and finishes at any time without notice.

CHATEAUX FINISH ACKNOWLEDGEMENT

- Chateaux is created by randomly applying several distressing techniques, softening all edges, padding the edges to create shadowing, and adding speckling to accentuate the distressing. A clear top coat is applied. The finish is oven-cured for durability.
- To achieve the appearance of randomly worn cabinetry, not all components in a room of cabinetry will receive all of the available distressing techniques. These techniques are:

  Light Chain Distressing
  Rounded Corners/ Worn Edges
  Worm Holes
  Rasping
  Dips
  Knife Cuts

- Because each component is distressed by hand, each component will exhibit variances in the intensity of the characteristics used on the component.
- Knife Cuts may be located at joints to simulate cracks. Structural integrity of the joint is maintained.
- We call your attention to the characteristics of Chateaux because the effect of the variations in an entire kitchen may be different from what you witness in viewing displays or a door sample. These variations are common from door to door in an installation and will not be reason for replacement. IN ADDITION, the characteristics of Chateaux change significantly from door style to door style.
- StarMark Cabinetry reserves the right to change the specifications of species and finishes at any time without notice.

COTTAGE FINISH ACKNOWLEDGEMENT

- The Cottage finish is created by 1) optional light chain distressing of the wood, 2) sanding and distressing through the finish to expose the raw wood underneath and rounding corners and then 3) adding glaze to bring out the wood's unique textures.
- Because it is a hand-rubbed technique, there will be variations in the intensity of the rub-through and the distressing.
- The Cottage finish is susceptible to wear and tear from normal residential use. Nicks, chips, dents and rub-through will be more obvious, especially on sharp corners and edges.
- We call your attention to the characteristics of Cottage because the effect of the variations in an entire kitchen may be different from what you witness in viewing displays or a finish sample. These variations are common from door to door in an installation and will not be reason for replacement. IN ADDITION, the characteristics of Cottage change significantly from door style to door style.
- StarMark Cabinetry reserves the right to change the specifications of species and finishes at any time without notice.

© Copyright StarMark Cabinetry FEBRUARY 2022

HOMESTEAD FINISH ACKNOWLEDGEMENT

For many homeowners, Homestead, because of the heavy distressing, would best be used as an accent color in a design (island, hood, etc), instead of being the main color. If it is being used as the main color, please note, a room of heavily distressed cabinetry is a rustic/primitive look, and may not be what the homeowner wants to achieve.

- Homestead is available on Alder and Rustic Alder door styles. Several distressing techniques are applied randomly and heavily. A glaze is applied, wiped and brushed. Drawer and door corners are rounded. A clear top coat is applied. This finish is oven cured for durability.
- To achieve the appearance of randomly worn cabinetry, not all components in a room of cabinetry will relieve all of the available distressing techniques. These techniques are:

  Light Chain Distressing
  Rounded Corners/ Worn Edges
  Abundant Worm Holes
  Rasping
  Dips
  Knife Cuts
  Chiseling

- Because each component is distressed by hand, each component will exhibit variances in the intensity of the characteristics used on the component.
- Knife Cuts may be located at joints to simulate cracks. Structural integrity of the joint is maintained.
- The amount of worm holes is considerably more than the amount found on Chateaux or Old World Distressing.
- We call your attention to the characteristics of Homestead because the effect of the variations in an entire kitchen may be different from what you witness in viewing displays or a door sample. These variations are common from door to door in an installation and will not be reason for replacement. IN ADDITION, the characteristics of Homestead change significantly from door style to door style.
- StarMark Cabinetry manufactures our cabinets using an all-wood plywood box. To get the best possible finish quality when creating cabinetry finished in Homestead, we use an end panel with a layer of MDF to create Flush end panels (dealer, this is block 9040), Finished end panels (dealer, this is block 9020), and Furniture end panels (dealer, this is block 9030). This is a superior substrate for achieving a consistent, quality finish. In addition, if the door you selected has a veneered center panel, it is replaced with a center panel made of HDO material. If you specify that the interior back panel of a cabinet should receive color (dealer, this is modification STIN, block 9480), the material used will be HDO material. Toe Board Trim (block 12200) will also be HDO material. These materials assure the best possible finish. If you have questions about the materials used in StarMark Cabinetry, we encourage you to discuss with your dealer.
- StarMark Cabinetry reserves the right to change the specifications of species and finishes at any time without notice.

OLD WORLD DISTRESSING FINISH ACKNOWLEDGEMENT

- Old World is created by randomly applying several distressing techniques, softening all edges, and adding a glaze to accentuate the distressing. A clear top coat is applied. The finish is oven-cured for durability.
- To achieve the appearance of randomly worn cabinetry, not all components in a room of cabinetry will relieve all of the available distressing techniques. These techniques are:

  Light Chain Distressing
  Rounded Corners/ Worn Edges
  Worm Holes
  Rasping
  Dips
  Knife Cuts
  Rub Through (on Amaretto finish only)

- Because each component is distressed by hand, each component will exhibit variances in the intensity of the characteristics used on the component.
- Knife Cuts may be located at joints to simulate cracks. Structural integrity of the joint is maintained.
- We call your attention to the characteristics of Old World because the effect of the variations in an entire kitchen may be different from what you witness in viewing displays or a door sample. These variations are common from door to door in an installation and will not be reason for replacement. IN ADDITION, the characteristics of Old World change significantly from door style to door style.
- StarMark Cabinetry reserves the right to change the specifications of species and finishes at any time without notice.

NOTE: The conditions described in this FINISH EXPECTATIONS form are NOT considered defects or reasons for replacement.

Dealers, a copy of this form (with signature fields) is found on OneTouch in Forms, within the Orders section.

© Copyright StarMark Cabinetry FEBRUARY 2022

VILLA FINISH ACKNOWLEDGEMENT

- The Villa finish is created with a combination of tinted varnish, glaze and a unique hand rubbed technique.
- Because of this unique hand rubbed technique, there will be variations in the intensity of the "brush marks" and color.
- Brush stroke is horizontal on slab drawer headers and on the center panel of five-piece drawer headers. Brush stroke is vertical on Hampton and Lafayette five-piece drawer header center panels.
- The Villa finish is susceptible to wear and tear of normal residential use. This finish intensifies nicks, chips and dents, especially on sharp corners.
- We call your attention to the characteristics of Villa because the effect of the variations in an entire kitchen may be different from what you witness in viewing displays or a finish sample. These variations are common from door to door in an installation and will not be reason for replacement. IN ADDITION, the characteristics of Villa can change significantly from door style to door style.
- StarMark Cabinetry manufactures our cabinets using an all-wood plywood box. To get the best possible finish quality when creating cabinetry finished in Villa, we use an end panel with a layer of MDF to create Flush end panels (dealer, this is block 9040), Finished end panels (dealer, this is block 9020), and Furniture end panels (dealer, this is block 9030). This is a superior substrate for achieving a consistent, quality finish. In addition, if the door you selected has a veneered center panel, it is replaced with a center panel made of HDO material and the Tabor door is constructed with 100% MDF. If you specify that the interior back panel of a cabinet should receive color (dealer, this is modification STIN, block 9480), the material used will be HDO material. Toe Board Trim (block 12200) will also be HDO material. These materials assure the best possible finish. If you have questions about the materials used in StarMark Cabinetry, we encourage you to discuss with your dealer.
- StarMark Cabinetry reserves the right to change the specifications of species and finishes at any time without notice.

WEATHERED/WEATHERED SNOW FINISH ACKNOWLEDGEMENT

- Weathered is available on Oak, on select door styles. Weathered is a wire brush technique that removes soft grain, resulting in substantial texture on the door and drawer header. Wire brushing is applied to the face of doors and drawer headers and to finished end panels. When a Stain with Glaze or Tinted Varnish with Glaze is specified, glaze is applied and wiped by hand. A clear top coat is applied. The finish is oven cured for durability.
- When a Stain with Glaze or Tinted Varnish with Glaze is specified, the glazing is hand applied, so expect artistic variations in the intensity and look when glaze is applied in conjunction with the Weathered texture.
- Weathered is susceptible to wear and tear of normal residential use.
- We call your attention to the characteristics of Weathered because the effect of the variations in an entire kitchen may be different from what you witness in viewing displays or a finish sample. These variations are common from door to door in an installation and will not be reason for replacement. IN ADDITION, the characteristics of Weathered can change significantly from door style to door style.
- When applied to moulding, wire brushing results depend on the type of moulding. Wire brushing will be visible on the flat surface of moulding such as Arts & Craft Crown Moulding (ACCM). On moulding that has raised profiles, such as Crown Moulding (CM), wire brushing will be evident on the raised portions, but not on the scooped portions.
- Some installations include a variety of Finished Ends and Panels. Wire brushing is applied to some, not all, Finished Ends and Panels. Refer to the list in this section and make sure to educate your homeowner that not all components will have visible wire brushing texture. In addition, 48" is the maximum panel width to receive wire brushing texture.
- StarMark Cabinetry reserves the right to change the specifications of species and finishes at any time without notice.

NOTE: The conditions described in this FINISH EXPECTATIONS form are NOT considered defects or reasons for replacement.

Dealers, a copy of this form (with signature fields) is found on OneTouch in Forms, within the Orders section.

© Copyright StarMark Cabinetry FEBRUARY 2022

REVEAL
TWO LOOKS FOR WALL, TALL AND BASE CABINETS

StarMark overlay doors will have one of two styles:

- Modern
- Traditional, also called "partial" and "half inch."

The "reveal" measures how much of the cabinet's face frame shows when the doors/drawers are in a closed position.
A Modern door style will show less of the face frame than a Traditional door style. A Traditional door style shows the most of the cabinet's face frame.

MODERN

REVEAL MEASUREMENTS

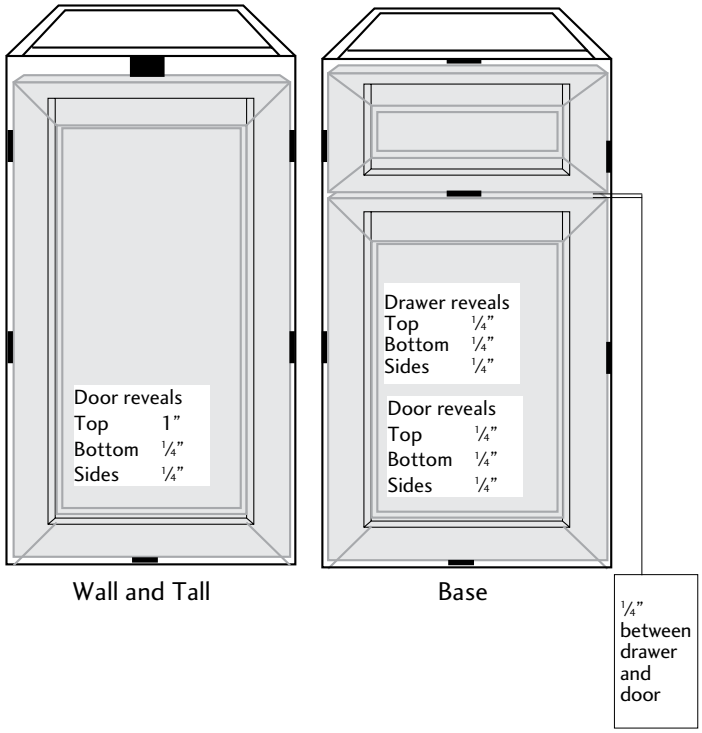

REVEAL BETWEEN TWO DOORS

Butt doors

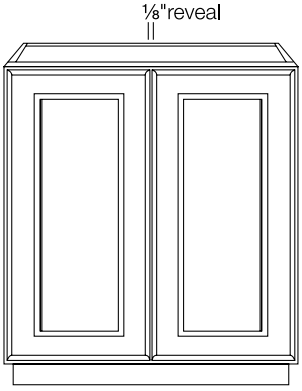

Fixed mullion

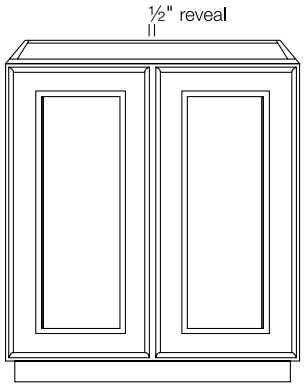

TRADITIONAL (PARTIAL)

REVEAL MEASUREMENTS

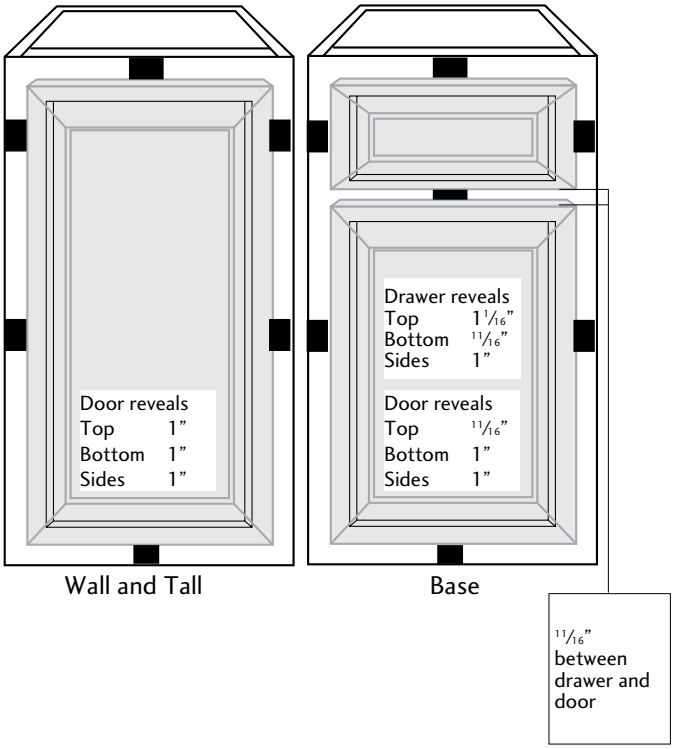

REVEAL BETWEEN TWO DOORS

Butt doors

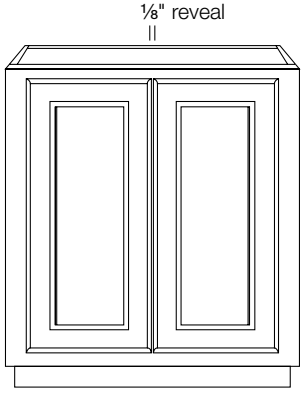

Fixed mullion

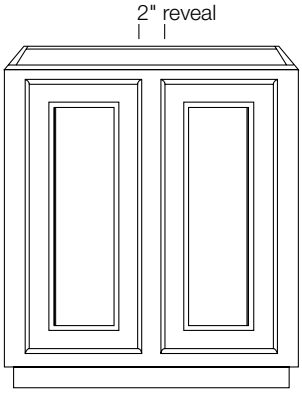

© Copyright StarMark Cabinetry FEBRUARY 2022

DOOR STYLES

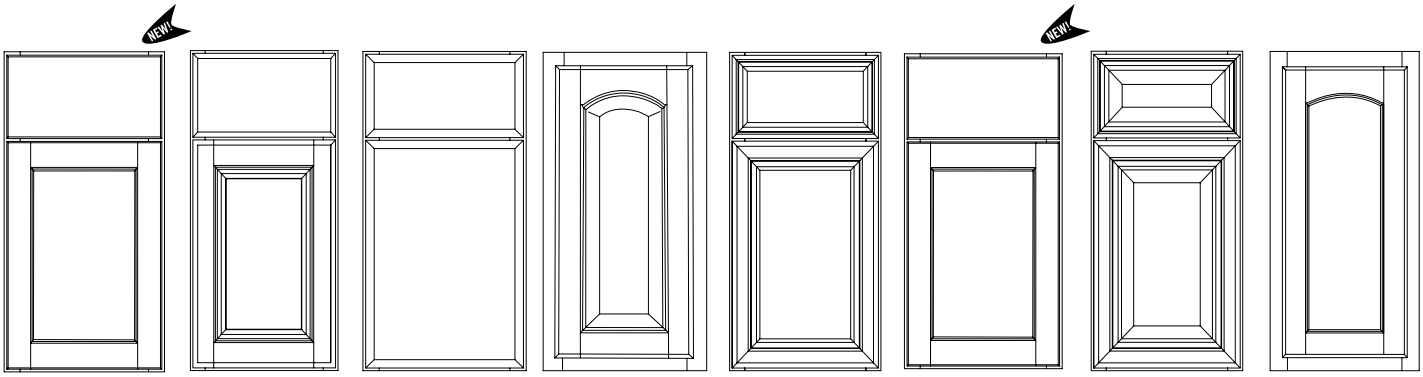

Abilene Modern | Accord Modern | Aero Modern | Alite Traditional | Altamonte Modern | Anita Modern | Arlington Modern | Ashford Traditional

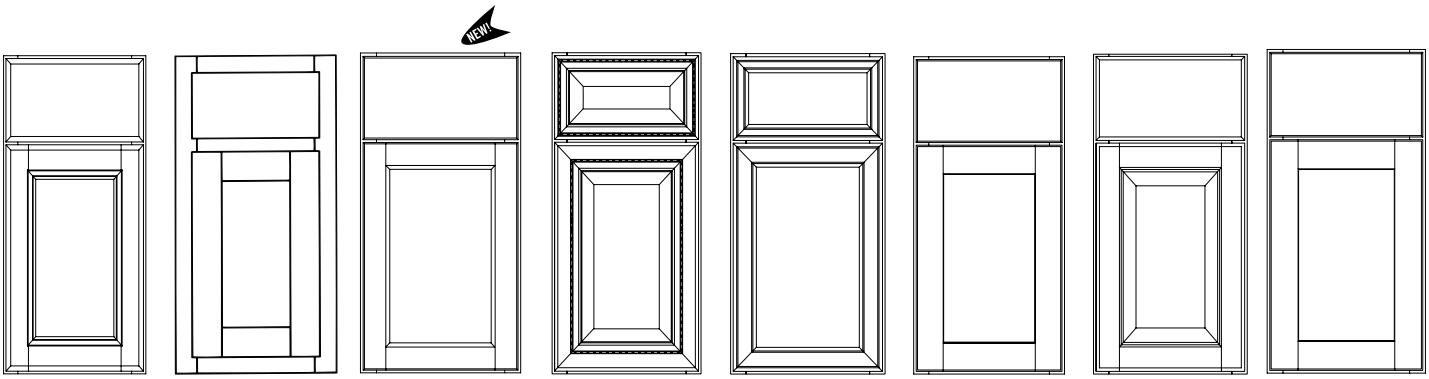

Avendale Modern | Bedford Traditional | Belfonte Modern | Bell Gardens Modern | Bethany Modern | Bonita Modern | Breckenridge Modern | Bridgeport Modern

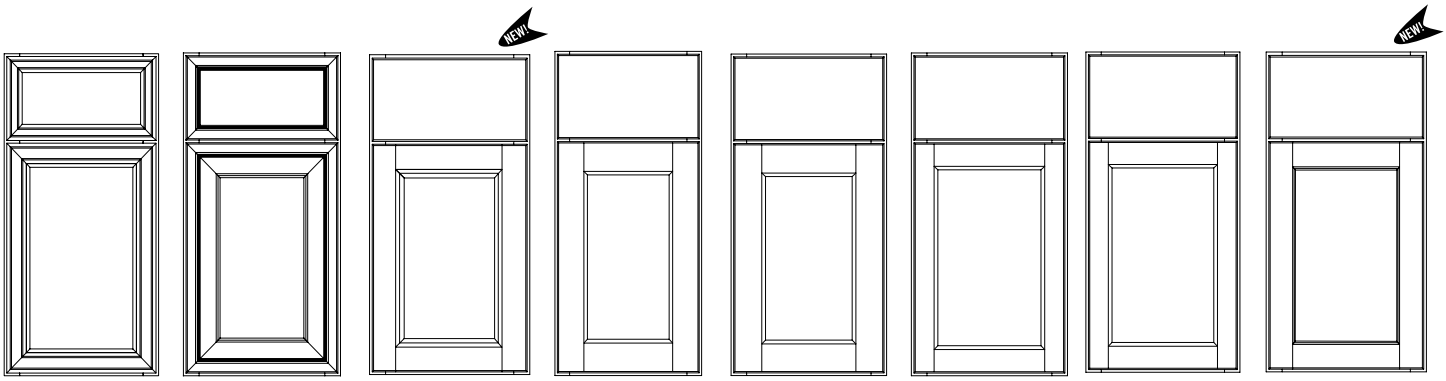

Brisbane Modern | Calais Modern | Chappell Modern | Chesapeake Modern | Clifton Modern | Coralville Modern | Cosmopolitan Modern | Edgemore Modern

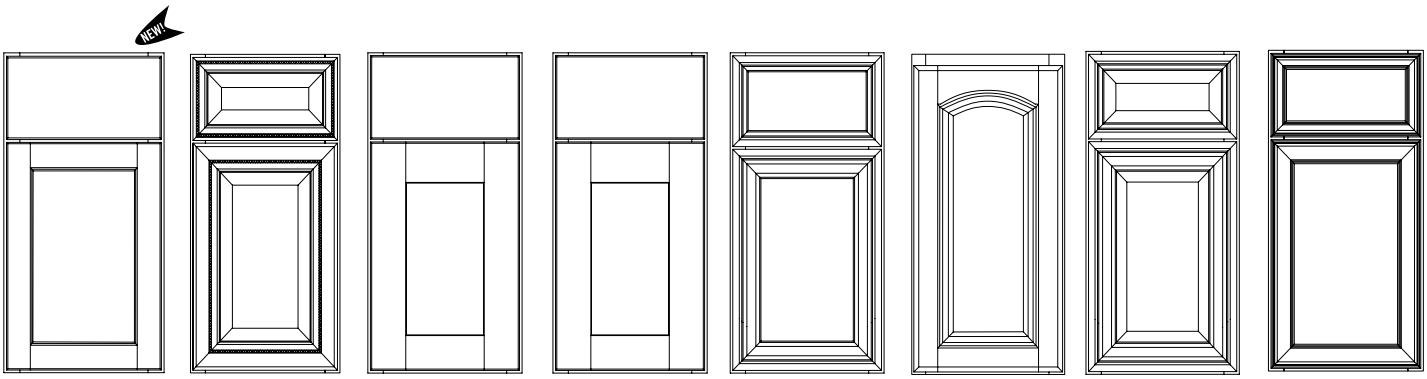

Edinburgh Modern | Ellington Modern | Farmington Modern | Fullerton Modern | Gallant Modern | Georgetown Modern | Glendale Modern | Griffon Modern

© Copyright StarMark Cabinetry FEBRUARY 2022

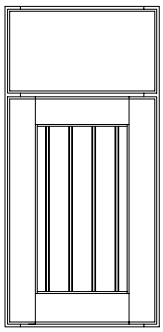
Hampton Modern

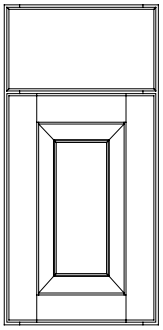
Hanover Modern

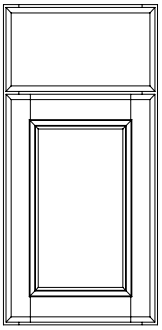
Harbor Modern

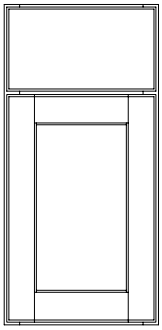
Harrison Modern

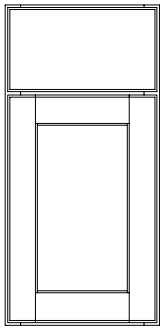
Hudson Modern

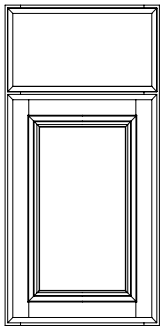
Huntingford Modern

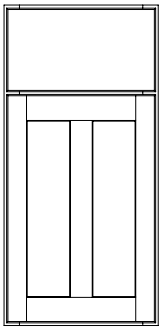
Laguna Modern

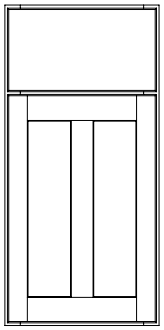
Lancaster Modern

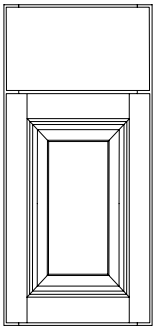
Lehigh Modern

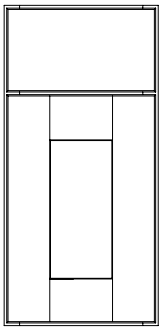
Manhattan Modern

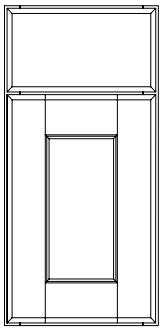
Medina Modern

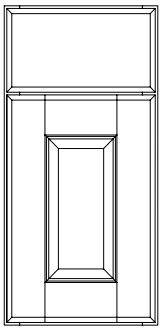
Melbourne Modern

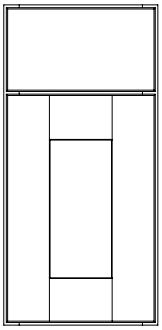
Milan Modern

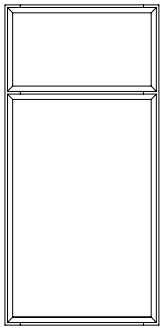
Monroe Modern

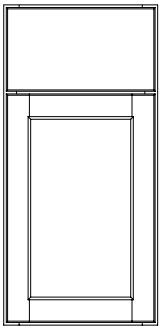
Oakley Modern

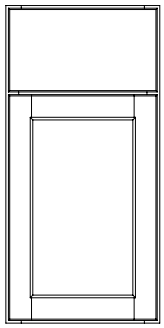
Orian Modern

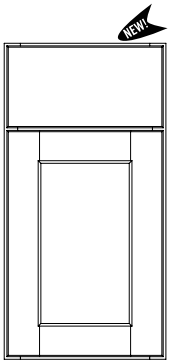

Osprey Modern

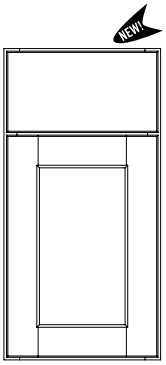

Overland Modern

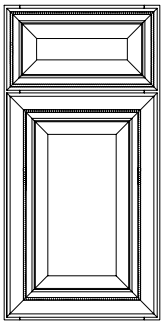
Peabody Modern

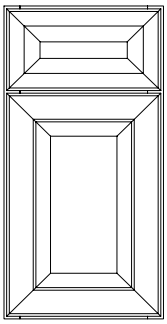
Prescott Modern

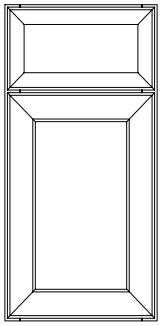
Princeton Modern

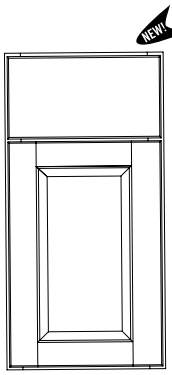

Remington Modern

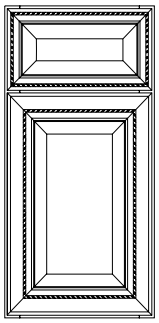
Redcliff Modern

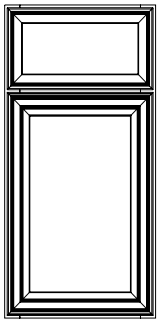
Regal Modern

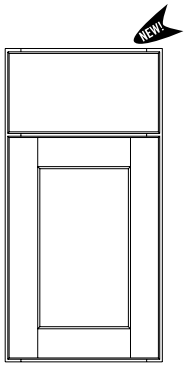

Renwick Modern

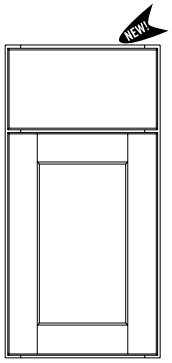

Richland Modern

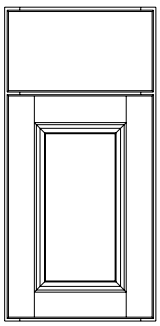
Ridgeville Modern

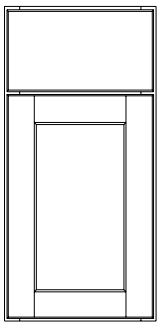
Roanoke Modern

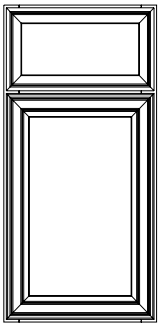
Roman Modern

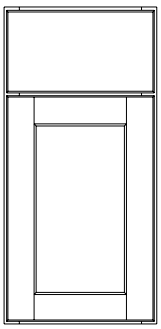
Roseville Modern

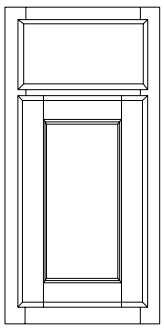
Salem Traditional

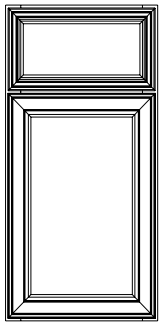
San Dimas Modern

© Copyright StarMark Cabinetry FEBRUARY 2022

DOOR STYLES

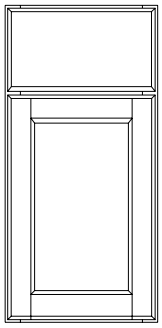
Stockton Modern

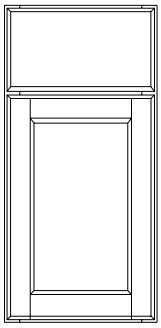
Stratford Modern

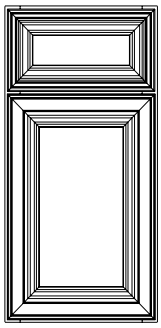
Sundance Modern

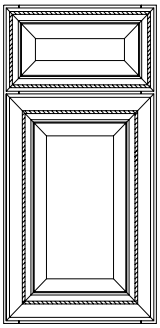
Syracuse Modern

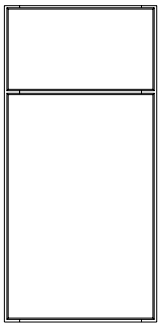
Tabor Modern

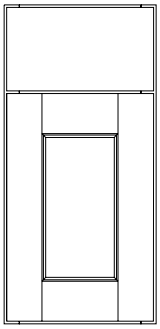
Taft Modern

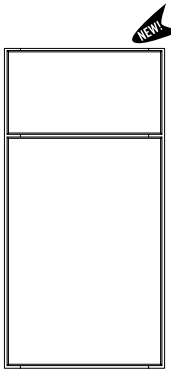

Tama Modern

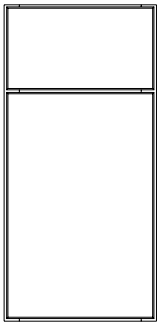
Tempo Modern

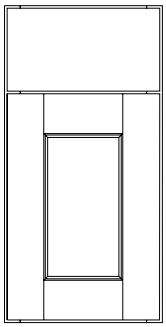
Tipton Modern

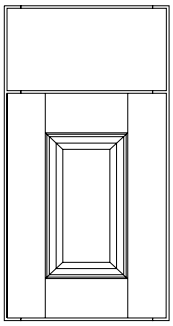
Tucson Modern

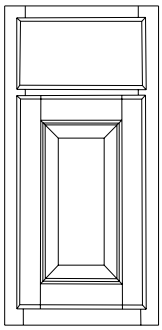
Tudor Traditional

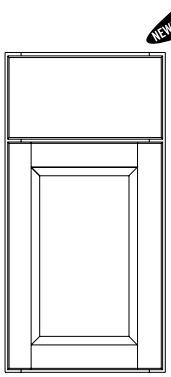

Vail Modern

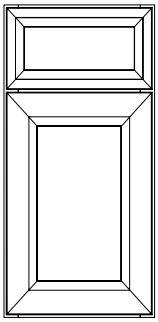
Valliant Modern

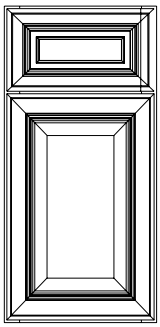
Venice Modern

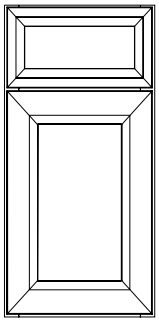
Ventura Modern

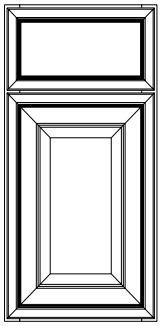
Verona Modern

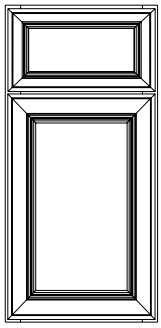
Viola Modern

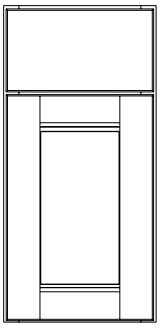
Waterfall Modern

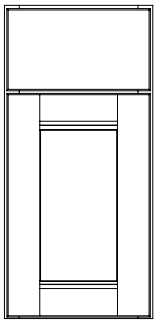
Waynesville Modern

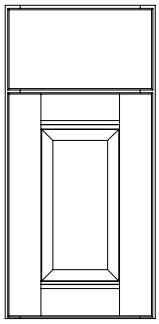
Westerly Modern

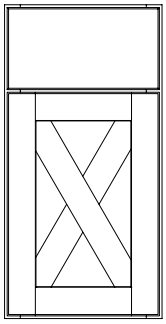
Xavier Modern

© Copyright StarMark Cabinetry FEBRUARY 2022

DOOR STYLE OPTIONS

FIVE PIECE HEADER

This modification replaces the standard slab header with a five-piece header.

Door Styles	See door styles for availability pages S-132–135.
Upcharge	$93 per drawer header
Block	9840

NOTES/CAUTIONS

1. DKV (block 7280), POK (block 7285) and VDD (block 8025) have a drawer that cannot receive a five piece header. See blocks for details.

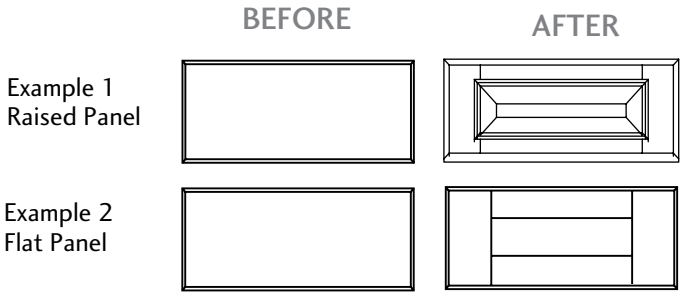

HOW TO ORDER A FIVE PIECE HEADER

- Check FIVE PIECE HEADER in the STYLING OPTIONS box, found on the first page of the Order Form.
- Specify FIVE PIECE HEADER in the Special Information section.
- To price, total the drawers and drawer fronts in the order. Multiply by the FIVE PIECE HEADER charge. Specify the total in the price column.
- This option is applied to the entire order. Every drawer opening 4½" tall and greater will receive a five-piece header.

© Copyright StarMark Cabinetry FEBRUARY 2022

DOOR STYLE OPTIONS

EDGE TREATMENTS

The Edge Treatments dramatically increases the number of door styles you can offer your clients, and there is no charge for an optional edge.

Door Styles	See chart on pages S-132–135.
Upcharge	No charge
Block	9790

HOW TO ORDER AN EDGE TREATMENTS

- Check OPTIONAL EDGE in the STYLING OPTIONS box, found on the first page of the Order Form.
- Specify EDGE TREATMENT in the Special Information section.

L Edge Treatment

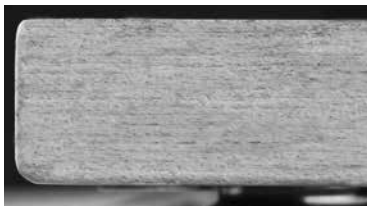

M Edge Treatment

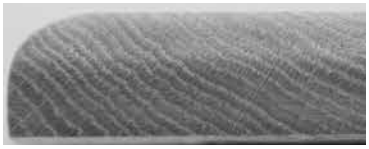

Decorator Edge Treatment

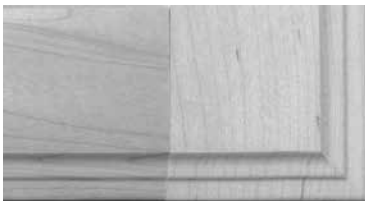

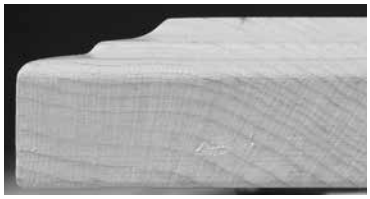

F Edge Treatment

H Edge Treatment

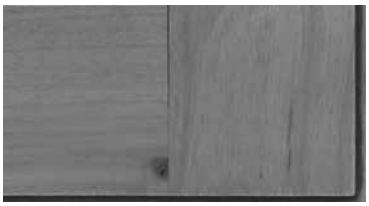

Z2 Edge Treatment

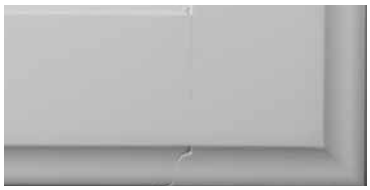

A Edge Treatment

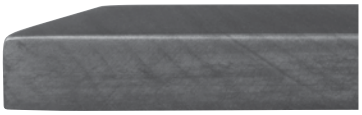

© Copyright StarMark Cabinetry FEBRUARY 2022

DOOR STYLE OPTIONS

FURNITURE PEGS

A 5/16" square wooden peg is driven into a 3/8" diameter drill hole. The gaps between the peg and the hole are visible and are not filled.

Door Styles	See chart on pages S-132–135.
Upcharge	Single pegs $16 per door and 5-piece header Double pegs $32 per door and 5-piece header
Block	9800

NOTES/CAUTIONS

1. This is a rustic look. We recommend viewing a sample door to determine desirability.
2. When DECORATOR EDGE is specified, only SINGLE PEGS can be ordered.
3. Not available on Aero, Altamonte, Arlington, Bell Gardens, Bethany, Brisbane, Calais, Ellington, Gallant, Glendale, Griffon, Monroe, Peabody, Prescott, Princeton, Redcliff, Regal, Roman, San Dimas, Sundance, Syracuse, Tabor, Tama, Tempo, Valliant, Venice, Ventura, Verona, Viola or on slab headers, profiled headers and Regent profiles.

HOW TO ORDER FURNITURE PEGS

- Check SINGLE PEGS or DOUBLE PEGS in the STYLING OPTIONS box, found on the first page of the Order Form.
- Specify nomenclature SPEGS or DPEGS in the SPECIAL INFORMATION column.
- To price, determine the number of doors and drawer headers that will receive the pegs, multiply by the SPEG or DPEG charge, and add to the cost of the cabinet.

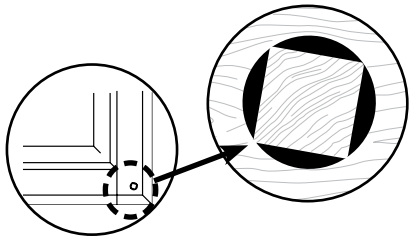

Single peg

Double pegs

BEVEL PULL

This modification results in doors and drawer headers that have bevel pulls on the top and bottom, so hardware is not necessary.

Door Styles	Alite, Ashford, Bedford, Salem, Tudor
Upcharge	None
Block	9760

HOW TO ORDER BEVEL PULLS

- Check BEVEL PULL in the STYLING OPTIONS box, found on the first page of the Order Form.
- Specify nomenclature **BP** as a separate line item.
- Not available with Decorator Edge
- There is no charge for this option.

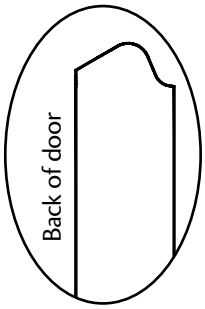

FINGER ROUTES

This modification results in doors and drawer headers that have finger routes so hardware is not necessary.

Door Styles	Alite, Ashford, Bedford, Salem, Tudor
Upcharge	$13 per door and drawer header
Block	9750

NOTES/CAUTIONS

1. Cabinets wider than 24" will have two finger routes per drawer header.
2. Not available on pocket doors.

HOW TO ORDER FINGER ROUTES

- Check FINGER ROUTES in the STYLING OPTIONS box, found on the first page of the Order Form.
- Specify nomenclature **FR** as a separate line item.
- To price, total the doors and drawer headers in the order, multiply by the FINGER ROUTE charge, and specify the total in the price column.

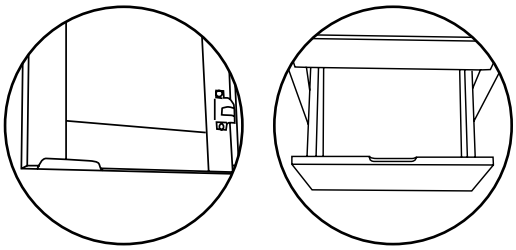

© Copyright StarMark Cabinetry FEBRUARY 2022

DOOR STYLE OPTIONS

REGENT PROFILE

The Regent Profile is a convenient, inexpensive way to increase the number of "looks" you can offer your clients.

This modification replaces the standard slab header with a routed profile. The Regent Profile has three graduated steps, which provides more opportunity for glaze to "hang up." The grain runs horizontally.

Door Styles	Accord, Alite, Ashford, Avendale, Breckenridge, Chesapeake, Clifton, Coralville, Cosmopolitan, Georgetown, Harbor, Huntingford, Lehigh, Medina, Melbourne, Renwick, Richland, Ridgeville, Roanoke, Roseville, Salem, Stockton, Stratford, Taft, Tipton, Tucson, Tudor
Upcharge	$27 per drawer header
Block	9830

NOTES/CAUTIONS

1. If you specify a REGENT PROFILE, the five piece-header, furniture pegs, bevel pull, finger route and locks are not available.
2. A Regent Profile on a desk drawer (DKV) reduces the center panel to about one inch high. Larger styles of decorative hardware may not fit in this area.
3. A flip down header (Blocks 2310, 2315, 2340) is not available with a REGENT PROFILE.
4. Drawer header with a Regent Profile is ¾" thick at center and approximately ⅜" thick at outer step, near edge.

HOW TO ORDER A REGENT PROFILE

- Check REGENT PROFILE in the STYLING OPTIONS box, found on the first page of the Order Form.
- Specify REGENT PROFILE as a separate line item
- To price, total the drawers and drawer headers in the order, multiply by the REGENT PROFILE charge, and specify the total in the price column.
- This option is applied to the entire order.

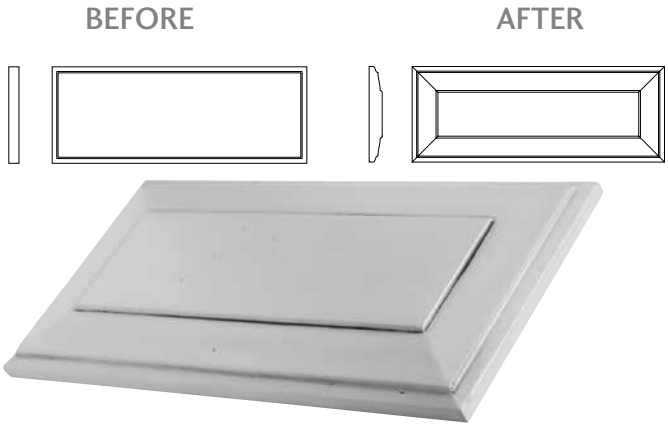

PROFILED HEADER

This modification replaces the standard slab header with a profiled header. The grain runs horizontally.

Door Styles	Accord, Alite, Arlington, Bell Gardens, Breckenridge, Ellington, Georgetown, Glendale, Hanover, Huntingford, Lehigh, Melbourne, Peabody, Prescott, Redcliff, Ridgeville, Sundance, Syracuse, Tudor, Venice, Verona, Westerly
Upcharge	$33 per drawer header
Block	9835

NOTES/CAUTIONS

1. If you specify a PROFILED HEADER, the five piece-header, optional edges, furniture pegs, bevel pull and finger route options are not available.
2. A Profiled Header on a desk drawer (DKV) reduces the center panel to about one inch high. Larger styles of decorative hardware may not fit in this area.
3. Rolled profile coordinates with doors with a rolled center panel profile. Scooped profile coordinates with a scooped or H center panel profile. See block 9835 for more details.

HOW TO ORDER A PROFILED HEADER

- Check PROFILED HEADER in the STYLING OPTIONS box, found on the first page of the Order Form.
- Specify PROFILED HEADER as a separate line item
- To price, total the drawers and drawer headers in the order, multiply by the PROFILED HEADER charge, and specify the total in the price column.
- This option is applied to the entire order.

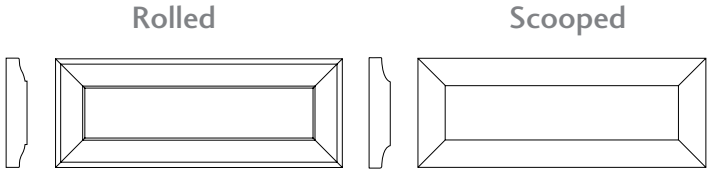

© Copyright StarMark Cabinetry FEBRUARY 2022

DOOR PRICE COLUMNS, SORTED BY COLUMN NUMBER

PRICE COLUMN 1
Hickory Salem
Hickory Stratford
Oak Ashford
Oak Bedford
Oak Bridgeport
Oak Salem
Oak Stratford

PRICE COLUMN 2
Alder Ashford ❖
Alder Bedford ❖
Alder Salem ❖
Cherry Ashford
Cherry Bedford
Cherry Bridgeport
Cherry Salem
Hickory Ashford
Hickory Bedford
Hickory Bridgeport
Hickory Roseville
Maple Ashford
Maple Bedford
Maple Bridgeport
Maple Roseville
Maple Salem
Maple Stratford
MDF Tama
Oak Aero
Oak Alite
Oak Cosmopolitan
Oak Hudson
Oak Monroe
Oak Roseville
Oak Tempo
Oak Tudor
Walnut Bridgeport

PRICE COLUMN 3
Alder Roseville ❖
Alder Stratford ❖
Cherry Roseville
Cherry Stratford
Hickory Aero
Hickory Alite ❖
Hickory Anita
Hickory Bethany
Hickory Brisbane
Hickory Cosmopolitan
Hickory Edinburgh
Hickory Griffon
Hickory Hudson
Hickory Monroe
Hickory Regal
Hickory Roman
Hickory Tempo
Hickory Tudor ❖
Hickory Waynesville
Maple Cosmopolitan
Maple Waynesville
Oak Anita
Oak Bethany
Oak Brisbane
Oak Chesapeake
Oak Edinburgh
Oak Farmington
Oak Griffon
Oak Regal
Oak Richland
Oak Roman
Oak Taft
Oak Waynesville
Walnut Roseville
Walnut Stratford

PRICE COLUMN 4
Alder Anita ❖
Alder Edinburgh ❖
Alder Waynesville ❖
Cherry Anita
Cherry Edinburgh
Cherry Waynesville
Hickory Chesapeake
Hickory Farmington
Hickory Richland
Hickory Taft
Maple Anita
Maple Bethany
Maple Brisbane
Maple Edinburgh
Maple Griffon
Maple Regal
Maple Roman
Oak Accord
Oak Bonita
Oak Breckenridge
Oak Georgetown
Oak Hanover
Oak Harrison
Oak Milan
Oak Oakley
Oak Stockton
QS Oak Anita
QS Oak Edinburgh

PRICE COLUMN 5
Alder Alite ❖
Alder Bridgeport ❖
Alder Chesapeake ❖
Alder Cosmopolitan ❖
Alder Farmington ❖
Alder Hudson ❖
Alder Milan ❖
Alder Richland ❖
Alder Taft ❖
Alder Tudor ❖
Cherry Bethany
Cherry Brisbane
Cherry Chesapeake
Cherry Cosmopolitan
Cherry Griffon
Cherry Regal
Cherry Richland
Cherry Roman
Cherry Taft
Hickory Abilene
Hickory Edgemore
Hickory Lehigh
Hickory Milan
Hickory Ridgeville
Hickory Roanoke
Hickory San Dimas
Maple Chesapeake
Maple Farmington
Maple Hudson
Maple Milan
Maple Richland
Maple Ridgeville
Maple Roanoke
Maple Taft
Oak Abilene
Oak Clifton
Oak Edgemore
Oak Fullerton
Oak Hampton
Oak Harbor
Oak Lancaster
Oak Lehigh
Oak Manhattan
Oak Medina

PRICE COLUMN 5
Oak Melbourne
Oak Renwick
Oak Ridgeville
Oak Roanoke
Oak San Dimas
Oak Tipton
Oak Tucson
Walnut Cosmopolitan

PRICE COLUMN 6
Alder Abilene ❖
Alder Accord ❖
Alder Aero
Alder Breckenridge ❖
Alder Edgemore ❖
Alder Georgetown ❖
Alder Hanover ❖
Alder Lancaster ❖
Alder Lehigh ❖
Alder Medina ❖
Alder Monroe
Alder Melbourne ❖
Alder Ridgeville ❖
Alder Roanoke ❖
Alder Tempo
Cherry Abilene
Cherry Aero
Cherry Alite
Cherry Edgemore
Cherry Farmington
Cherry Hudson
Cherry Lancaster
Cherry Lehigh
Cherry Milan
Cherry Monroe
Cherry Ridgeville
Cherry Roanoke
Cherry San Dimas
Cherry Tabor
Cherry Tempo
Cherry Tudor
Hickory Accord ❖
Hickory Bonita
Hickory Breckenridge ❖
Hickory Calais
Hickory Clifton
Hickory Coralville
Hickory Fullerton ❖
Hickory Georgetown ❖
Hickory Hanover
Hickory Harbor
Hickory Harrison
Hickory Lancaster
Hickory Manhattan
Hickory Medina
Hickory Melbourne
Hickory Oakley
Hickory Overland
Hickory Prescott
Hickory Princeton
Hickory Renwick
Hickory Stockton
Hickory Tipton
Hickory Tucson
Hickory Valliant
Hickory Waterfall
Hickory Westerly
Maple Abilene
Maple Aero
Maple Alite
Maple Edgemore
Maple Lancaster
Maple Lehigh
Maple Monroe

PRICE COLUMN 6
Maple Oakley
Maple Princeton
Maple San Dimas
Maple Tabor
Maple Tempo
Maple Tudor
Oak Avendale
Oak Coralville
Oak Laguna
Oak Overland
Oak Valliant
Oak Waterfall
Oak Westerly
QS Oak Abilene
QS Oak Edgemore
Walnut Farmington
Walnut Hudson
Walnut Milan
Walnut Ridgeville
Walnut Roanoke
Walnut Tempo

PRICE COLUMN 7
Alder Bonita ❖
Alder Clifton ❖
Alder Fullerton ❖
Alder Harbor ❖
Alder Harrison ❖
Alder Manhattan ❖
Alder Oakley
Alder Renwick ❖
Alder Stockton ❖
Alder Tipton ❖
Alder Tucson ❖
Alder Valliant ❖
Alder Waterfall ❖
Alder Westerly ❖
Cherry Accord ❖
Cherry Bonita
Cherry Breckenridge
Cherry Clifton
Cherry Fullerton
Cherry Georgetown
Cherry Hanover
Cherry Harbor
Cherry Harrison
Cherry Manhattan
Cherry Medina
Cherry Melbourne
Cherry Oakley
Cherry Prescott
Cherry Princeton
Cherry Renwick
Cherry Stockton
Cherry Tipton
Cherry Tucson
Cherry Valliant
Cherry Waterfall
Cherry Westerly
Hickory Avendale
Hickory Hampton
Hickory Laguna
Hickory Verona
Maple Accord
Maple Bonita
Maple Breckenridge
Maple Calais
Maple Clifton
Maple Fullerton
Maple Georgetown
Maple Hanover
Maple Harbor
Maple Harrison
Maple Manhattan

PRICE COLUMN 7
Maple Medina
Maple Melbourne
Maple Prescott
Maple Renwick
Maple Stockton
Maple Tipton
Maple Tucson
Maple Valliant
Maple Waterfall
Maple Westerly
Oak Huntingford
QS Oak Cosmopolitan
QS Oak Farmington
QS Oak Tempo
QS Oak Valliant
Walnut Accord
Walnut Bonita
Walnut Breckenridge
Walnut Fullerton
Walnut Hanover
Walnut Harrison
Walnut Manhattan
Walnut Medina
Walnut Melbourne
Walnut Stockton

PRICE COLUMN 8
Alder Coralville ❖
Alder Hampton
Alder Overland ❖
Cherry Coralville
Cherry Calais
Cherry Overland
Hickory Huntingford
Hickory Sundance
Hickory Ventura
Maple Coralville
Maple Gallant
Maple Glendale
Maple Hampton
Maple Overland
Oak Orian
Oak Sundance
Oak Ventura
Walnut Coralville

❖ These doors are available in Rustic.
I These doors are Inset doors.
QS Oak stands for Quarter Sawn Oak.
There is a 25% upcharge for Walnut door styles.

Door Price Columns continued on next page

© Copyright StarMark Cabinetry FEBRUARY 2022

DOOR PRICE COLUMNS, SORTED BY COLUMN NUMBER

PRICE COLUMN 9
Alder Altamonte ❖
Alder Arlington ❖
Alder Avendale ❖
Alder Huntingford
Alder Laguna ❖
Cherry Altamonte
Cherry Arlington
Cherry Avendale
Cherry Gallant
Cherry Glendale
Cherry Hampton
Cherry Huntingford
Cherry Laguna
Cherry Sundance
Cherry Verona
Hickory Belfonte
Hickory Chappell
Hickory Orian
Hickory Osprey
Hickory Remington
Hickory Vail
Maple Altamonte
Maple Arlington
Maple Avendale
Maple Huntingford
Maple Laguna
Maple Orian
Maple Sundance
Maple Syracuse
Maple Verona
Oak Belfonte
Oak Chappell
Oak Osprey
Oak Remington
Oak Vail
QS Oak Belfonte
QS Oak Coralville

PRICE COLUMN 10
Alder Belfonte ❖
Alder Bell Gardens ❖
Alder Chappell ❖
Alder Ellington ❖
Alder Orian
Alder Osprey ❖
Alder Peabody ❖
Alder Redcliff ❖
Alder Remington ❖
Alder Syracuse ❖
Alder Vail ❖

PRICE COLUMN 10
Alder Venice ❖
Alder Ventura ❖
Alder Viola ❖
Alder Xavier ❖
Cherry Belfonte
Cherry Bell Gardens
Cherry Chappell
Cherry Ellington
Cherry Orian
Cherry Osprey
Cherry Peabody
Cherry Redcliff
Cherry Remington
Cherry Syracuse
Cherry Vail
Cherry Venice
Cherry Ventura
Cherry Viola
Cherry Xavier
Hickory Xavier ❖
Maple Belfonte
Maple Bell Gardens
Maple Chappell
Maple Ellington
Maple Osprey
Maple Peabody
Maple Redcliff
Maple Remington
Maple Vail
Maple Venice
Maple Ventura
Maple Viola
Maple Xavier
Oak Xavier
QS Oak Belfonte
QS Oak Chappell
QS Oak Remington
QS Oak Vail
QS Oak Ventura
QS Oak Xavier

PRICE COLUMN 11
Alder Annabella ▮ ❖
Alder Charlotte ▮ ❖
Alder Claymont ▮ ❖
Alder Danburg ▮ ❖
Alder DeWitt ▮ ❖
Alder Evaro ▮ ❖
Alder Fairhaven ▮ ❖
Alder Gillette ▮ ❖
Alder Knottingham ▮ ❖
Alder Lafayette ▮ ❖
Alder Lafontaine ▮ ❖
Alder Laforest ▮ ❖
Alder Liberty ▮ ❖
Alder Mackay ▮ ❖
Alder Merrimac ▮ ❖
Alder Montico ▮ ❖
Alder Reynolds ▮ ❖
Alder Rocheport ▮ ❖
Alder Rock Elm ▮ ❖
Alder Winterhaven ▮ ❖
Cherry Annabella ▮
Cherry Charlotte ▮
Cherry Claymont ▮
Cherry Danburg ▮
Cherry DeWitt ▮
Cherry Evaro ▮
Cherry Fairhaven ▮
Cherry Gillette ▮

PRICE COLUMN 11
Cherry Knottingham ▮
Cherry Lafayette ▮
Cherry Lafontaine ▮
Cherry Laforest ▮
Cherry Liberty ▮
Cherry Mackay ▮
Cherry Merrimac ▮
Cherry Montico ▮
Cherry Reynolds ▮
Cherry Rocheport ▮
Cherry Rock Elm ▮
Cherry Winterhaven ▮
Maple Alexandria ▮
Maple Allentown ▮
Maple Amsdahl ▮
Maple Annabella ▮
Maple Charlotte ▮
Maple Claymont ▮
Maple Danburg ▮
Maple DeWitt ▮
Maple Evaro ▮
Maple Fairhaven ▮
Maple Gillette ▮
Maple Knottingham ▮
Maple Lafayette ▮
Maple Lafontaine ▮
Maple Laforest ▮
Maple Liberty ▮
Maple Mackay ▮
Maple Merrimac ▮
Maple Montico ▮
Maple Reynolds ▮
Maple Rocheport ▮
Maple Rock Elm ▮
Maple Winterhaven ▮
MDF Terra ▮
QS Oak Danburg ▮
QS Oak DeWitt ▮
QS Oak Fairhaven ▮
QS Oak Gillette ▮
QS Oak Knottingham ▮
QS Oak Lafayette ▮
QS Oak Lafontaine ▮
QS Oak Laforest ▮
QS Oak Mackay ▮
QS Oak Merrimac ▮
QS Oak Montico ▮
QS Oak Rocheport ▮
QS Oak Rock Elm ▮
QS Oak Winterhaven ▮

PRICE COLUMN 12
Alder Addison ▮ ❖
Alder Alexandria ▮ ❖
Alder Allentown ▮ ❖
Alder Addison ▮
❖ Alder Ballinger ▮ ❖
Alder Cambridge ▮ ❖
Alder Rutland ▮ ❖
Alder Victor ▮ ❖
Alder Xenon ▮ ❖
Cherry Addison ▮
Cherry Alexandria ▮
Cherry Allentown ▮
Cherry Amsdahl ▮
Cherry Ballinger ▮
Cherry Cambridge ▮
Cherry Rutland ▮
Cherry Victor ▮
Cherry Xenon ▮
Maple Addison ▮
Maple Ballinger ▮
Maple Cambridge ▮
Maple Rutland ▮
Maple Victor ▮
Maple Xenon ▮
QS Oak Addison ▮
QS Oak Alexandria ▮
QS Oak Allentown ▮
QS Oak Amsdahl ▮
QS Oak Annabella ▮
QS Oak Ballinger ▮
QS Oak Cambridge ▮
QS Oak Charlotte ▮
QS Oak Claymont ▮
QS Oak Evaro ▮
QS Oak Liberty ▮
QS Oak Reynolds ▮
QS Oak Rutland ▮
QS Oak Victor ▮
QS Oak Xenon ▮
Walnut Charlotte ▮
Walnut Claymont ▮
Walnut Danburg ▮
Walnut DeWitt ▮
Walnut Fairhaven ▮
Walnut Gillette ▮
Walnut Knottingham ▮
Walnut Lafontaine ▮
Walnut Laforest ▮
Walnut Liberty ▮
Walnut Mackay ▮
Walnut Merrimac ▮
Walnut Montico ▮
Walnut Reynolds ▮
Walnut Rocheport ▮
Walnut Rock Elm ▮

❖ These doors are available in Rustic.
▮ These doors are Inset doors.
QS Oak stands for Quarter Sawn Oak.
There is a 25% upcharge for Walnut door styles.

© Copyright StarMark Cabinetry FEBRUARY 2022

MODERN OVERLAY

DOOR	SPECIES
Abilene	Alder, Cherry, Hickory, Maple, Oak, Quarter Sawn Oak, Rustic Alder NEW!
Accord	Alder, Cherry, Hickory, Maple, Oak, Rustic Alder, Rustic Hickory, Walnut
Aero	Alder, Cherry, Hickory, Maple, Oak
Altamonte	Alder, Cherry, Maple, Rustic Alder
Anita	Alder, Cherry, Hickory, Maple, Oak, Quarter Sawn Oak, Rustic Alder NEW!
Arlington	Alder, Cherry, Maple, Rustic Alder
Avendale	Alder, Cherry, Hickory, Maple, Oak, Rustic Alder
Belfonte	Alder, Cherry, Hickory, Maple, Oak, Quarter Sawn Oak, Rustic Alder NEW!
Bell Gardens	Alder, Cherry, Maple, Rustic Alder
Bethany	Cherry, Hickory, Maple, Oak
Bonita	Alder, Cherry, Hickory, Maple, Oak, Rustic Alder, Walnut
Breckenridge	Alder, Cherry, Hickory, Maple, Oak, Rustic Alder, Rustic Hickory, Walnut
Bridgeport	Alder, Cherry, Hickory, Maple, Oak, Rustic Alder, Walnut
Brisbane	Cherry, Hickory, Maple, Oak
Calais	Cherry, Hickory, Maple
Chappell	Alder, Cherry, Hickory, Maple, Oak, Quarter Sawn Oak, Rustic Alder NEW!
Chesapeake	Alder, Cherry, Hickory, Maple, Oak, Rustic Alder NEW!
Clifton	Alder, Cherry, Hickory, Maple, Oak, Rustic Alder NEW!
Coralville	Alder, Cherry, Hickory, Maple, Oak, Quarter Sawn Oak, Rustic Alder, Walnut
Cosmopolitan	Alder, Cherry, Hickory, Maple, Oak, Quarter Sawn Oak, Rustic Alder, Walnut
Edgemore	Alder, Cherry, Hickory, Maple, Oak, Quarter Sawn Oak, Rustic Alder NEW!
Edinburgh	Alder, Cherry, Hickory, Maple, Oak, Quarter Sawn Oak, Rustic Alder NEW!
Ellington	Alder, Cherry, Maple, Rustic Alder
Farmington	Alder, Cherry, Hickory, Maple, Oak, Quarter Sawn Oak, Rustic Alder, Walnut
Fullerton	Alder, Cherry, Hickory, Maple, Oak, Rustic Alder, Rustic Hickory, Walnut
Gallant	Cherry, Maple
Georgetown	Alder, Cherry, Hickory, Maple, Oak, Rustic Alder, Rustic Hickory
Glendale	Cherry, Maple
Griffon	Cherry, Hickory, Maple, Oak
Hampton	Alder, Cherry, Hickory, Maple, Oak
Hanover	Alder, Cherry, Hickory, Maple, Oak, Rustic Alder, Walnut
Harbor	Alder, Cherry, Hickory, Maple, Oak, Rustic Alder
Harrison	Alder, Cherry, Hickory, Maple, Oak, Rustic Alder, Walnut
Hudson	Alder, Cherry, Hickory, Maple, Oak, Rustic Alder, Walnut
Huntingford	Alder, Cherry, Hickory, Maple, Oak
Laguna	Alder, Cherry, Hickory, Maple, Oak, Rustic Alder
Lancaster	Alder, Cherry, Hickory, Maple, Oak, Rustic Alder
Lehigh	Alder, Cherry, Hickory, Maple, Oak, Rustic Alder
Manhattan	Alder, Cherry, Hickory, Maple, Oak, Rustic Alder, Walnut
Medina	Alder, Cherry, Hickory, Maple, Oak, Rustic Alder, Walnut

MODERN OVERLAY continued

DOOR	SPECIES
Melbourne	Alder, Cherry, Hickory, Maple, Oak, Rustic Alder, Walnut
Milan	Alder, Cherry, Hickory, Maple, Oak, Rustic Alder, Walnut
Monroe	Alder, Cherry, Hickory, Maple, Oak
Oakley	Alder, Cherry, Hickory, Maple, Oak
Orian	Alder, Cherry, Hickory, Maple, Oak
Osprey	Alder, Cherry, Hickory, Maple, Oak, Rustic Alder NEW!
Overland	Alder, Cherry, Hickory, Maple, Oak, Rustic Alder NEW!
Peabody	Alder, Cherry, Maple, Rustic Alder
Prescott	Cherry, Hickory, Maple
Princeton	Cherry, Hickory, Maple
Redcliff	Alder, Cherry, Maple, Rustic Alder
Regal	Cherry, Hickory, Maple, Oak
Remington	Alder, Cherry, Hickory, Maple, Oak, Quarter Sawn Oak, Rustic Alder NEW!
Renwick	Alder, Cherry, Hickory, Maple, Oak, Rustic Alder NEW!
Richland	Alder, Cherry, Hickory, Maple, Oak, Rustic Alder NEW!
Ridgeville	Alder, Cherry, Hickory, Maple, Oak, Rustic Alder, Walnut
Roanoke	Alder, Cherry, Hickory, Maple, Oak, Rustic Alder, Walnut
Roman	Cherry, Hickory, Maple, Oak
Roseville	Alder, Cherry, Hickory, Maple, Oak, Rustic Alder, Walnut
San Dimas	Cherry, Hickory, Maple, Oak
Stockton	Alder, Cherry, Hickory, Maple, Oak, Rustic Alder, Walnut
Stratford	Alder, Cherry, Hickory, Maple, Oak, Rustic Alder, Walnut
Sundance	Cherry, Hickory, Maple, Oak
Syracuse	Alder, Cherry, Maple, Rustic Alder
Tabor	Cherry, Maple
Taft	Alder, Cherry, Hickory, Maple, Oak, Rustic Alder
Tama	MDF NEW!
Tempo	Alder, Cherry, Hickory, Maple, Oak, Quarter Sawn Oak, Walnut
Tipton	Alder, Cherry, Hickory, Maple, Oak, Rustic Alder
Tucson	Alder, Cherry, Hickory, Maple, Oak, Rustic Alder
Vail	Alder, Cherry, Hickory, Maple, Oak, Quarter Sawn Oak, Rustic Alder NEW!
Valliant	Alder, Cherry, Hickory, Maple, Oak, Rustic Alder, Quarter Sawn Oak
Venice	Alder, Cherry, Maple, Rustic Alder
Ventura	Alder, Cherry, Hickory, Maple, Oak, Rustic Alder, Quarter Sawn Oak
Verona	Cherry, Hickory, Maple
Viola	Alder, Cherry, Maple, Rustic Alder
Waterfall	Alder, Cherry, Hickory, Maple, Oak, Rustic Alder
Waynesville	Alder, Cherry, Hickory, Maple, Oak, Rustic Alder
Westerly	Alder, Cherry, Hickory, Maple, Oak, Rustic Alder
Xavier	Alder, Cherry, Hickory, Maple, Oak, Quarter Sawn Oak, Rustic Alder, Rustic Hickory

© Copyright StarMark Cabinetry FEBRUARY 2022

ABILENE NEW!

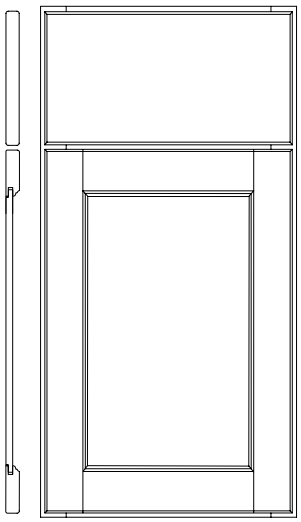

Standard slab drawer header

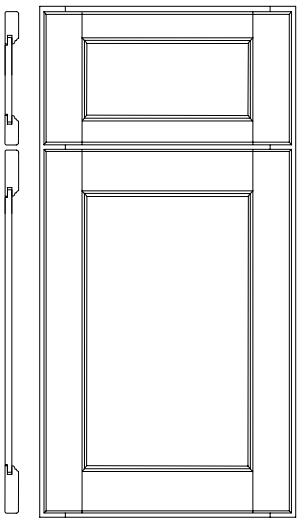

Optional 5-piece drawer header

Door Frame: ¾" thick square 2¼" stiles and rails
Door Center Panel: Solid ⅜" reverse flat panel
Drawer Header Center Panel: Solid ⅜" reverse flat panel on 5-piece drawer header
Drawer Header Stile Width: 2¼"
Drawer Header Rail Width: 1½"

Species	Alder	Cherry	Hickory	Maple	Oak
Price Column	6	6	5	6	5
Species	Rustic Alder		Qtr. Sawn Oak		
Price Column	6		6		
Overlay	Modern				
Outside Profile	L				
Hinge	Concealed				
Options	**Is it available?**				
5-Piece Header	Yes $93 per drawer header				page S-33
Profiled Header	No				
Regent Profile	No				
Optional Edge	Yes A, Deco, F, H, M, Z2				page S-34
Furniture Pegs	Yes				page S-35
Finger Routes	No				
Bevel Pulls	No				
Insert Doors	Yes		Block 9500		
Mullion Doors	Yes		Block 9530		
Thornton Insert Door	Yes		Block 9520		
Veg Storage Drawer	Yes		Block 9820		
Curved Doors	No				
Wall Cabinets	Yes				
Base Cabinets	Yes				
Tall Cabinets	Yes				
Vanity Cabinets	Yes				

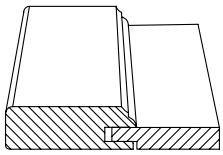

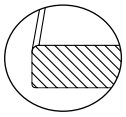

Outside profile is L

NOTES/CAUTIONS

1. 5-piece header only available on drawer headers 5⁷⁄₁₆" tall and greater.
2. Door and drawer hardware required.
3. The grain on the drawer header center panel runs horizontally.
4. See Anita for veneer panel option.
5. See Annabella for inset option.

© Copyright StarMark Cabinetry FEBRUARY 2022

ACCORD

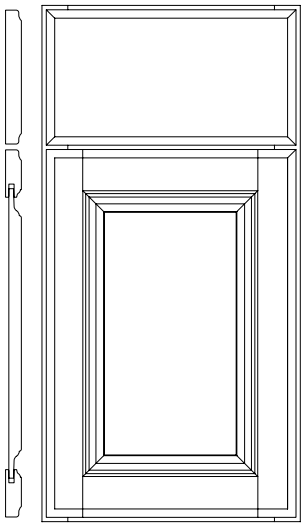

Standard slab drawer header

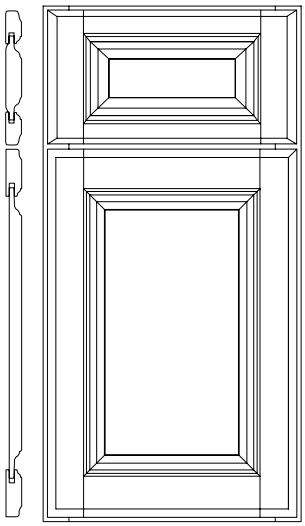

Optional 5-piece drawer header

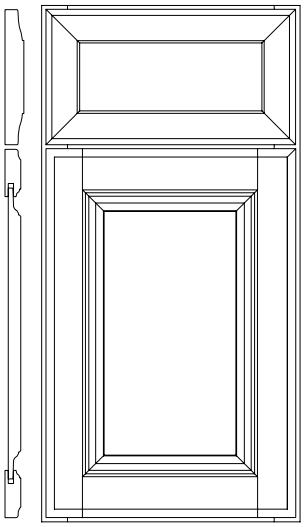

Optional profiled drawer header

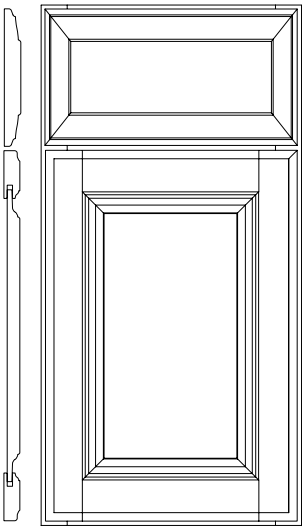

Optional Regent drawer profile

Door Frame: ¾″ thick square 2¼″ stiles and rails
Door Center Panel: Solid ⅝″ raised panel
Drawer Header Center Panel: Solid ⅝″ raised panel on 5-piece drawer header
Drawer Header Stile Width: 2¼″
Drawer Header Rail Width: 1½″

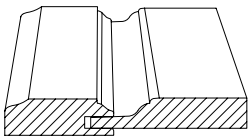

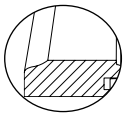

Outside profile is Z2

Species	Alder	Cherry	Hickory	
Price Column	6	7	6	
Species	Maple	Oak	Walnut	
Price Column	7	4	7 (+25%)	
Species	Rustic Alder		Rustic Hickory	
Price Column	6		6	
Overlay	Modern			
Outside Profile	Z2			
Hinge	Concealed			

Options	**Is it available?**	
5-Piece Header	Yes $93 per drawer header	page S-33
Profiled Header	Yes $33 per drawer header	page S-36
Regent Profile	Yes $27 per drawer header	page S-36
Optional Edge	Yes A, Deco, F, H, L, M	page S-34
Furniture Pegs	Yes	page S-35
Finger Routes	No	
Bevel Pulls	No	
Insert Doors	Yes	Block 9500
Mullion Doors	Yes	Block 9530
Thornton Insert Door	Yes	Block 9520
veg Storage Drawer	Yes	Block 9820
Curved Doors	Yes	
Wall Cabinets	Yes	
Base Cabinets	Yes	
Tall Cabinets	Yes	
Vanity Cabinets	Yes	

NOTES/CAUTIONS

1. 5-piece header only available on drawer headers 5⁷⁄₁₆″ tall and greater.
2. Glaze may not be as noticeable on this door style.
3. Door and drawer hardware required.
4. The grain on the drawer header center panel runs horizontally.
5. See Montico for inset option.

© Copyright StarMark Cabinetry FEBRUARY 2022

AERO

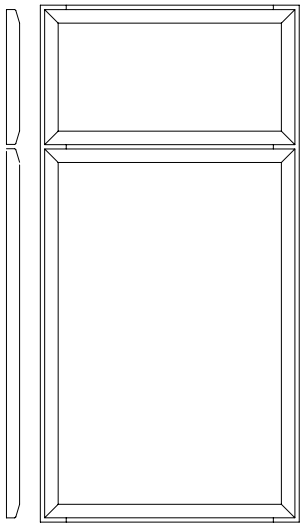

Standard slab drawer header

Material: Door and drawer header are ¾" solid wood

Species	Alder	Cherry	Hickory	Maple	Oak
Price Column	6	6	3	6	2
Overlay	Modern				
Outside Profile	Aero				
Hinge	Concealed				
Options	**Is it available?**				
5-Piece Header	No				
Profiled Header	No				
Regent Profile	No				
Optional Edge	Yes Deco, F, H, L, M, Z2 page S-34				
Furniture Pegs	No				
Finger Routes	No				
Bevel Pulls	No				
Insert Doors	Yes Block 9500 Built with Bridgeport style door				
Mullion Doors	Yes Block 9530 Built with Bridgeport style door				
Thornton Insert Door	No				
Veg Storage Drawer	Yes Block 9820 Built with Lancaster style header				
Curved Doors	Yes				
Wall Cabinets	Yes				
Base Cabinets	Yes				
Tall Cabinets	Yes				
Vanity Cabinets	Yes				

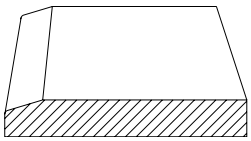

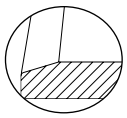

Outside profile is Aero

NOTES/CAUTIONS

1. **CAUTION:** Door may expand in humid climates. See Policies & Procedures: Climate Considerations.
2. Door and drawer hardware required.
3. Glaze hang-up may not be noticeable on this door style, but the glaze will change the tone of the stain.
4. On Tip Up and Bifold Door cabinets greater than 24" in width, Aero doors have horizontal grain.

© Copyright StarMark Cabinetry FEBRUARY 2022

ALTAMONTE

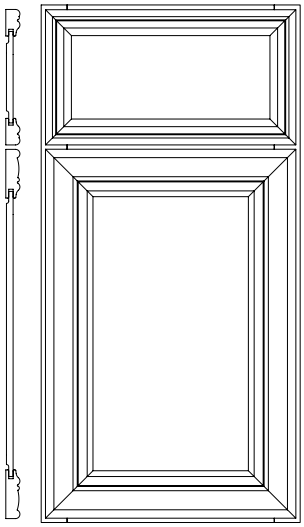

Standard 5-piece drawer header

Door Frame: ¾" thick mitered 2¾" stiles and rails
Door and Drawer Header Center Panel: Solid ⅜" reverse flat panel
Drawer Header Stile and Rail Width: 1½"

Species	Alder	Cherry	Maple	Rustic Alder	
Price Column	9	9	9	9	
Overlay	Modern				
Outside Profile	Unique				
Hinge	Concealed				
Options	**Is it available?**				
5-Piece Header	Standard				
Profiled Header	No				
Regent Profile	No				
Optional Edge	No				
Furniture Pegs	No				
Finger Routes	No				
Bevel Pulls	No				
Insert Doors	Yes			Block 9500	
Mullion Doors	Yes			Block 9530	
Thornton Insert Door	No				
Veg Storage Drawer	Yes Built with Lancaster style header			Block 9820	
Curved Doors	No				
Wall Cabinets	Yes				
Base Cabinets	Yes				
Tall Cabinets	Yes				
Vanity Cabinets	Yes				

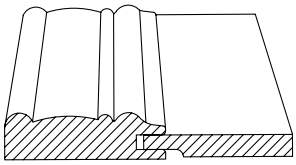

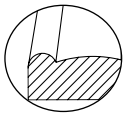

Outside profile is Unique

NOTES/CAUTIONS

1. 5-piece header only available on drawer headers 5 7/16" tall and greater.
2. Door and drawer hardware required.
3. Mullion doors will only accept ⅛" thick glass. Glass clips will not be routed into door frame.
4. The grain on the drawer header center panel runs horizontally.

© Copyright StarMark Cabinetry FEBRUARY 2022

ANITA NEW!

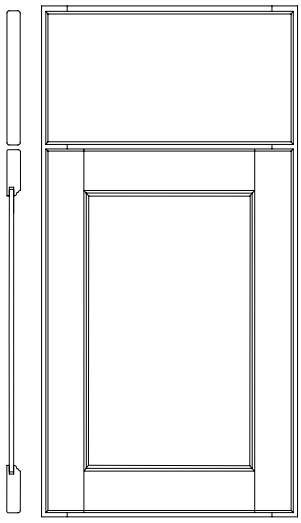

Standard slab drawer header

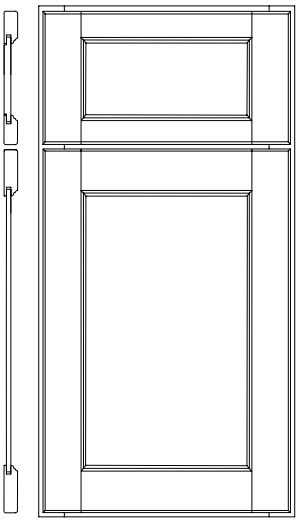

Optional 5-piece drawer header

Door Frame: ¾" thick square 2¼" stiles and rails
Door Center Panel: ¼" veneer
Drawer Header Center Panel: ¼" veneer on 5-piece drawer header
Drawer Header Stile Width: 2¼"
Drawer Header Rail Width: 1½"

Species	Alder	Cherry	Hickory	Maple	Oak
Price Column	4	4	3	4	3
Species	Rustic Alder		Qtr. Sawn Oak		
Price Column	4		4		
Overlay	Modern				
Outside Profile	L				
Hinge	Concealed				
Options	**Is it available?**				
5-Piece Header	Yes $93 per drawer header			page S-33	
Profiled Header	No				
Regent Profile	No				
Optional Edge	Yes A, Deco, F, H, M, Z2			page S-34	
Furniture Pegs	Yes			page S-35	
Finger Routes	No				
Bevel Pulls	No				
Insert Doors	Yes		Block 9500		
Mullion Doors	Yes		Block 9530		
Thornton Insert Door	Yes		Block 9520		
Veg Storage Drawer	Yes		Block 9820		
Curved Doors	No				
Wall Cabinets	Yes				
Base Cabinets	Yes				
Tall Cabinets	Yes				
Vanity Cabinets	Yes				

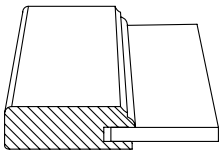

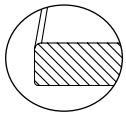

Outside profile is L

NOTES/CAUTIONS

1. 5-piece header only available on drawer headers 5 7/16" tall and greater.
2. Door and drawer hardware required.
3. Veneer center panel may have color variation from solid wood frame.
4. The grain on the drawer header center panel runs horizontally.
5. See Abilene for solid panel option.

Full Access for Modern door styles

A cabinet that is 24" to 42" wide can be manufactured without the face frame center mullion. To order, prefix the cabinet nomenclature with a **2.** Styling will be butt doors. This is a no-charge option.

© Copyright StarMark Cabinetry FEBRUARY 2022

ARLINGTON

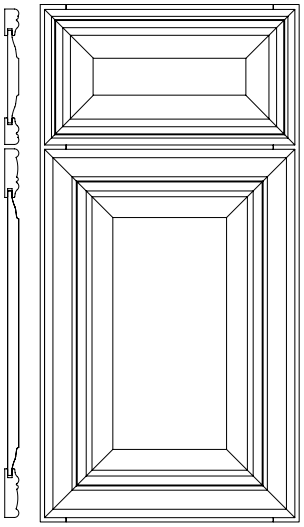

Standard 5-piece drawer header

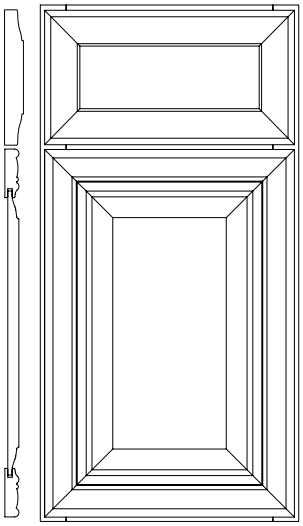

Optional profiled drawer header

Door Frame: ¾" thick mitered 2¾" stiles and rails
Door Center Panel: Solid ⅝" raised panel
Drawer Header Center Panel: Solid ⅝" raised panel
Drawer Header Stile and Rail Width: 1½"

Species	Alder	Cherry	Maple	Rustic Alder
Price Column	9	9	9	9
Overlay	Modern			
Outside Profile	Unique			
Hinge	Concealed			
Options	**Is it available?**			
5-Piece Header	Standard			
Profiled Header	Yes $33 per drawer header page S-36			
Regent Profile	No			
Optional Edge	No			
Furniture Pegs	No			
Finger Routes	No			
Bevel Pulls	No			
Insert Doors	Yes		Block 9500	
Mullion Doors	Yes		Block 9530	
Thornton Insert Door	No			
Veg Storage Drawer	Yes Built with Lancaster style header		Block 9820	
Curved Doors	No			
Wall Cabinets	Yes			
Base Cabinets	Yes			
Tall Cabinets	Yes			
Vanity Cabinets	Yes			

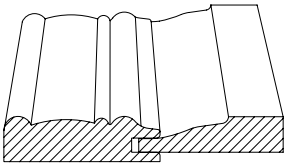

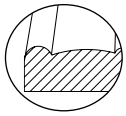

Outside profile is Unique

NOTES/CAUTIONS

1. 5-piece header only available on drawer headers 5 7/16" tall and greater. Drawer headers less than 6½" in height will be a flat panel.
2. Doors on cabinets ASCW2124, ASCW2421, ASBC_FS, ASSSW, LSB33, SBC33, SBC33FS, SCW21, SLSB33 and SSSW33, will be flat panel.
3. Door and drawer hardware required.
4. Mullion doors will only accept ⅛" thick glass. Glass clips will not be routed into door frame.
5. The grain on the drawer header center panel runs horizontally.

© Copyright StarMark Cabinetry FEBRUARY 2022

AVENDALE

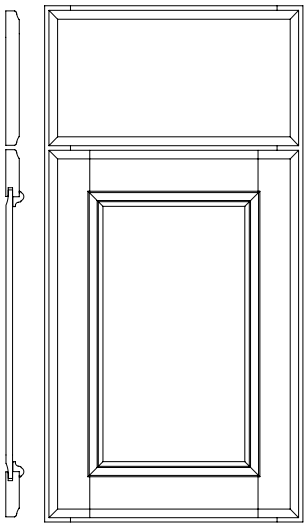

Standard slab drawer header

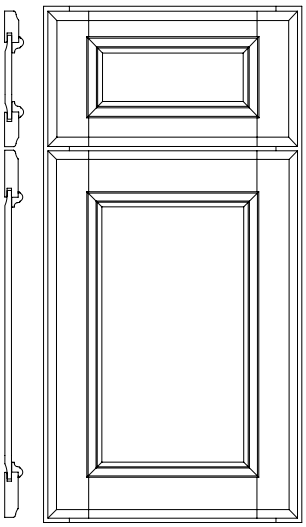

Optional 5-piece drawer header

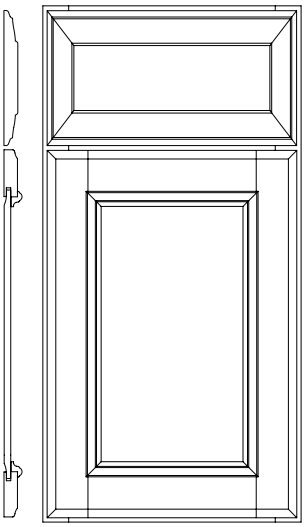

Optional Regent drawer profile

Door Frame: ¾" thick square 2¼" stiles and rails
Door Center Panel: Solid ⅜" reverse flat panel trimmed with moulding
Drawer Header Center Panel: Solid ⅜" reverse flat panel trimmed with moulding on 5-piece drawer header
Drawer Header Stile Width: 2¼"
Drawer Header Rail Width: 1½"

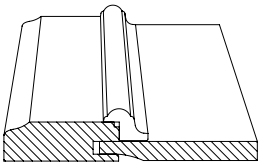

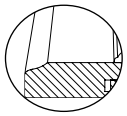

Outside profile is Z2

Species	Alder	Cherry	Hickory	Maple	Oak	Rustic Alder
Price Column	9	9	7	9	6	9
Overlay	Modern					
Outside Profile	Z2					
Hinge	Concealed					
Options	**Is it available?**					
5-Piece Header	Yes $93 per drawer header					page S-33
Profiled Header	No					
Regent Profile	Yes $27 per drawer header					page S-36
Optional Edge	Yes A, Deco, F, H, L, M					page S-34
Furniture Pegs	Yes					page S-35
Finger Routes	No					
Bevel Pulls	No					
Insert Doors	Yes			Block 9500		
Mullion Doors	Yes			Block 9530		
Thornton Insert Door	Yes			Block 9520		
Veg Storage Drawer	Yes			Block 9820		
Curved Doors	No					
Wall Cabinets	Yes					
Base Cabinets	Yes					
Tall Cabinets	Yes					
Vanity Cabinets	Yes					

NOTES/CAUTIONS

1. 5-piece header only available on drawer headers 5 7/16" tall and greater.
2. Door and drawer hardware required.
3. Mullion doors will not have applied moulding.
4. The grain on the drawer header center panel runs horizontally.
5. See Harbor for veneer panel option.
6. See Alexandria for inset option.

Full Access for Modern door styles

A cabinet that is 24" to 42" wide can be manufactured without the face frame center mullion. To order, prefix the cabinet nomenclature with a **2.** Styling will be butt doors. This is a no-charge option.

© Copyright StarMark Cabinetry FEBRUARY 2022

BELFONTE NEW!

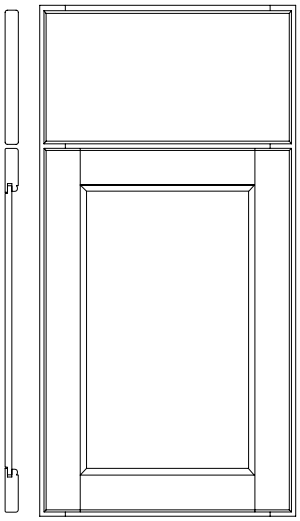

Standard slab drawer header

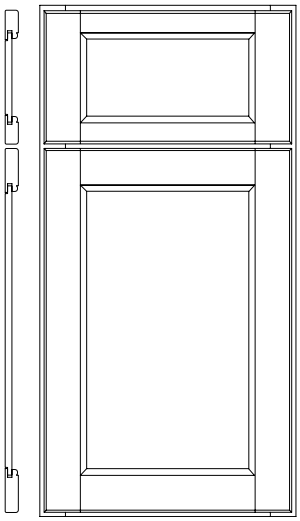

Optional 5-piece drawer header

Door Frame: ¾" thick square 2¼" stiles and rails
Door Center Panel: Solid ⅜" reverse flat panel
Drawer Header Center Panel: Solid ⅜" reverse flat panel on 5-piece drawer header
Drawer Header Stile Width: 2¼"
Drawer Header Rail Width: 1½"

Species	Alder	Cherry	Hickory	Maple	Oak
Price Column	10	10	9	10	9
Species	Rustic Alder		Qtr. Sawn Oak		
Price Column	10		10		
Overlay	Modern				
Outside Profile	L				
Hinge	Concealed				
Options	**Is it available?**				
5-Piece Header	Yes $93 per drawer header page S-33				
Profiled Header	No				
Regent Profile	No				
Optional Edge	Yes A, Deco, F, H, M, Z2 page S-34				
Furniture Pegs	Yes page S-35				
Finger Routes	No				
Bevel Pulls	No				
Insert Doors	Yes Block 9500				
Mullion Doors	Yes Block 9530				
Thornton Insert Door	Yes Block 9520				
Veg Storage Drawer	Yes Block 9820 Built with Lancaster style header				
Curved Doors	No				
Wall Cabinets	Yes				
Base Cabinets	Yes				
Tall Cabinets	Yes				
Vanity Cabinets	Yes				

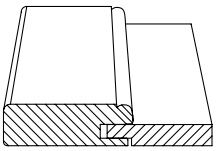

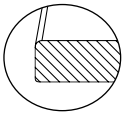

Outside profile is L

NOTES/CAUTIONS

1. 5-piece header only available on drawer headers 5 7/16" tall and greater.
2. Door and drawer hardware required.
3. The grain on the drawer header center panel runs horizontally.
4. See Ballinger for inset option.

© Copyright StarMark Cabinetry FEBRUARY 2022

BELL GARDENS

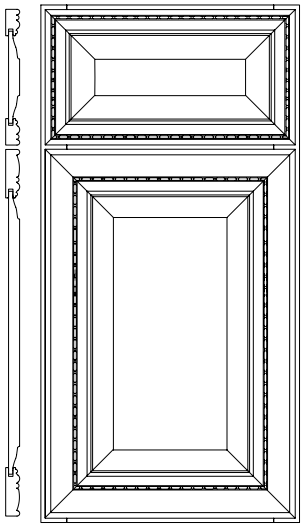

Standard 5-piece drawer header

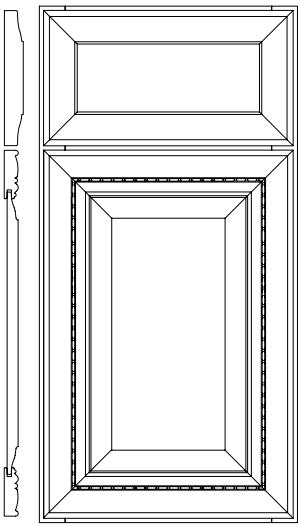

Optional profiled drawer header

Door Frame: ¾" thick mitered 2¾" stiles and rails
Door Center Panel: Solid ⅝" raised panel
Drawer Header Center Panel: Solid ⅝" raised panel
Drawer Header Stile and Rail Width: 1½"

Species	Alder	Cherry	Maple	Rustic Alder
Price Column	10	10	10	10
Overlay	Modern			
Outside Profile	Unique			
Hinge	Concealed			
Options	**Is it available?**			
5-Piece Header	Standard			
Profiled Header	Yes $33 per drawer header page S-36			
Regent Profile	No			
Optional Edge	No			
Furniture Pegs	No			
Finger Routes	No			
Bevel Pulls	No			
Insert Doors	Yes		Block 9500	
Mullion Doors	Yes		Block 9530	
Thornton Insert Door	No			
Veg Storage Drawer	Yes		Block 9820	
	Built with Lancaster style header			
Curved Doors	No			
Wall Cabinets	Yes			
Base Cabinets	Yes			
Tall Cabinets	Yes			
Vanity Cabinets	Yes			

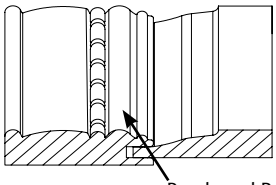

Beads and Reed moulding

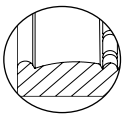

Outside profile is Unique

NOTES/CAUTIONS

1. 5-piece header only available on drawer headers 5 7/16" tall and greater. Drawer headers less than 6½" in height will be a flat panel.
2. Doors on cabinets ASCW2124, ASCW2421, ASBC__FS, SSSW33, ASSSW, SBC33, SCW21, SBC33FS, LSB33 and SLSB33 will be flat panel.
3. Door and drawer hardware required.
4. Mullion doors will only accept ⅛" thick glass. Glass clips will not be routed into door frame.
5. The grain on the drawer header center panel runs horizontally.

© Copyright StarMark Cabinetry FEBRUARY 2022

BETHANY

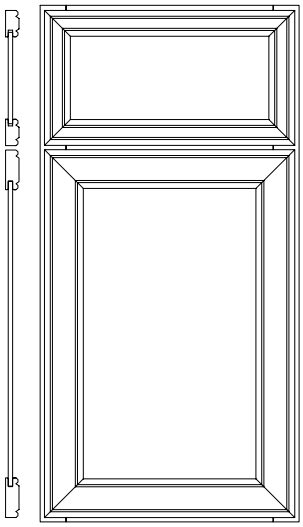

Standard 5-piece drawer header

Door Frame: ¾" thick mitered 2¼" stiles and rails
Door and Drawer Header Center Panel: ¼" veneer
Drawer Header Stile and Rail Width: 1½"

Species	Cherry	Hickory	Maple	Oak
Price Column	5	3	4	3
Overlay	Modern			
Outside Profile	Unique			
Hinge	Concealed			
Options	**Is it available?**			
5-Piece Header	Standard			
Profiled Header	No			
Regent Profile	No			
Optional Edge	No			
Furniture Pegs	No			
Finger Routes	No			
Bevel Pulls	No			
Insert Doors	Yes		Block 9500	
Mullion Doors	Yes		Block 9530	
Thornton Insert Door	No			
Veg Storage Drawer	Yes Built with Lancaster style header		Block 9820	
Curved Doors	No			
Wall Cabinets	Yes			
Base Cabinets	Yes			
Tall Cabinets	Yes			
Vanity Cabinets	Yes			

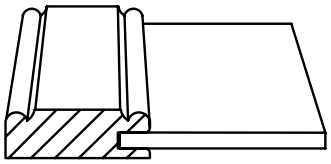

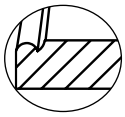

Outside profile is Unique

NOTES/CAUTIONS

1. 5-piece header only available on drawer headers 5 7/16" tall and greater.
2. Door and drawer hardware required.
3. Veneer center panel may have color variation from solid wood frame.
4. The grain on the drawer header center panel runs horizontally.

© Copyright StarMark Cabinetry FEBRUARY 2022

BONITA

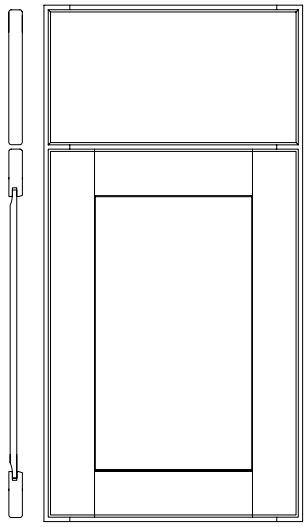

Standard slab drawer header

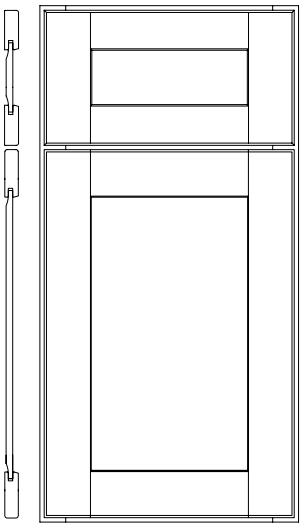

Optional 5-piece drawer header

Door Frame: ¾" thick square 2¼" stiles and rails
Door Center Panel: Solid ⅜" reverse flat panel
Drawer Header Center Panel: Solid ⅜" reverse flat panel on 5-piece drawer header
Drawer Header Stile Width: 2¼"
Drawer Header Rail Width: 1½"

Species	Alder	Cherry	Hickory	Maple	Oak
Price Column	7	7	6	7	4
Species	Rustic Alder		Walnut		
Price Column	7		7 (+25%)		
Overlay	Modern				
Outside Profile	L				
Hinge	Concealed				
Options	**Is it available?**				
5-Piece Header	Yes $93 per drawer header			page S-33	
Profiled Header	No				
Regent Profile	No				
Optional Edge	Yes A, Deco, F, H, M, Z2			page S-34	
Furniture Pegs	Yes			page S-35	
Finger Routes	No				
Bevel Pulls	No				
Insert Doors	Yes	Block 9500			
Mullion Doors	Yes	Block 9530			
Thornton Insert Door	Yes	Block 9520			
Veg Storage Drawer	Yes	Block 9820			
Curved Doors	No				
Wall Cabinets	Yes				
Base Cabinets	Yes				
Tall Cabinets	Yes				
Vanity Cabinets	Yes				

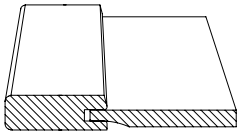

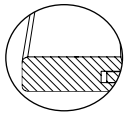

Outside profile is L

NOTES/CAUTIONS

1. 5-piece header only available on drawer headers 5 7/16" tall and greater.
2. Glaze may not be as noticeable on this door style.
3. Door and drawer hardware required.
4. The grain on the drawer header center panel runs horizontally.
5. See Bridgeport for veneer panel option.
6. See Gillette for inset option.

Full Access for Modern door styles

A cabinet that is 24" to 42" wide can be manufactured without the face frame center mullion. To order, prefix the cabinet nomenclature with a **2.** Styling will be butt doors. This is a no-charge option.

© Copyright StarMark Cabinetry FEBRUARY 2022

BRECKENRIDGE

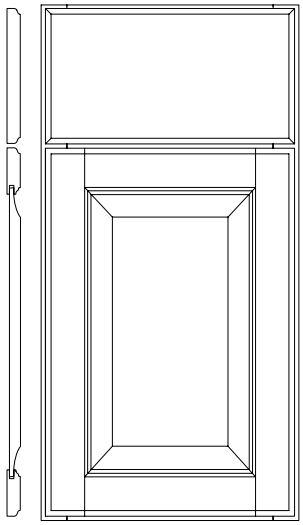

Standard slab drawer header

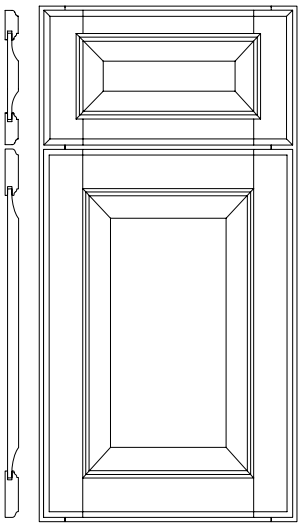

Optional 5-piece drawer header

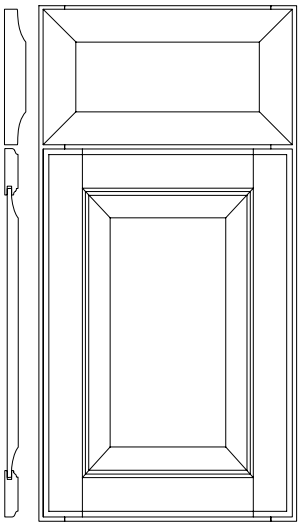

Optional profiled drawer header

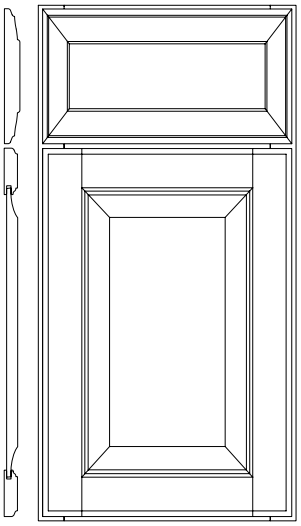

Optional Regent drawer profile

Door Frame: ¾" thick square 2¼" stiles and rails
Door Center Panel: Solid ⅝" raised panel
Drawer Header Center Panel: Solid ⅝" raised panel on 5-piece drawer header
Drawer Header Stile Width: 2¼"
Drawer Header Rail Width: 1½"

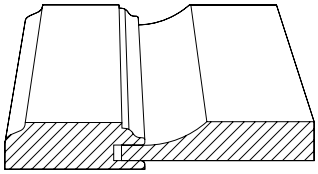

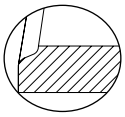

Outside profile is F

Species	Alder	Cherry	Hickory	
Price Column	6	7	6	
Species	Maple	Oak	Rustic Alder	Walnut
Price Column	7	4	6	7 (+25%)
Species	Rustic Hickory			
Price Column	6			
Overlay	Modern			
Outside Profile	F			
Hinge	Concealed			

Options	**Is it available?**	
5-Piece Header	Yes $93 per drawer header	page S-33
Profiled Header	Yes $33 per drawer header	page S-36
Regent Profile	Yes $27 per drawer header	page S-36
Optional Edge	Yes A, Deco, H, L, M, Z2	page S-34
Furniture Pegs	Yes	page S-35
Finger Routes	No	
Bevel Pulls	No	
Insert Doors	Yes	Block 9500
Mullion Doors	Yes	Block 9530
Thornton Insert Door	Yes	Block 9520
Veg Storage Drawer	Yes	Block 9820
Curved Doors	Yes	
Wall Cabinets	Yes	
Base Cabinets	Yes	
Tall Cabinets	Yes	
Vanity Cabinets	Yes	

NOTES/CAUTIONS

1. 5-piece header only available on drawer headers 5⁷⁄₁₆" tall and greater.
2. Glaze may not be noticeable on this door style.
3. The grain on the drawer header center panel runs horizontally.
4. See Tudor for traditional overlay option.
5. See Merrimac for inset option.

© Copyright StarMark Cabinetry FEBRUARY 2022

BRIDGEPORT

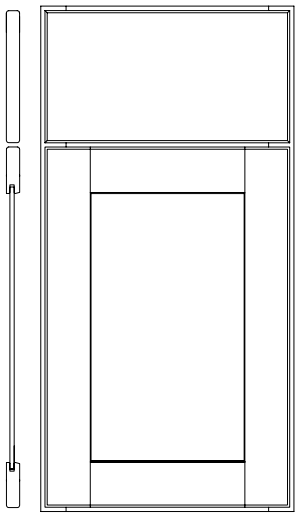

Standard slab drawer header

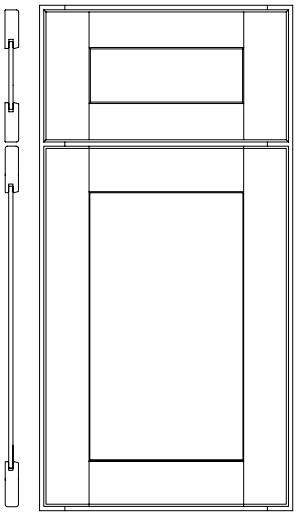

Optional 5-piece drawer header

Door Frame: ¾" thick square 2¼" stiles and rails
Door Center Panel: ¼" veneer
Drawer Header Center Panel: ¼" veneer on 5-piece drawer header
Drawer Header Stile Width: 2¼"
Drawer Header Rail Width: 1½"

Species	Alder	Cherry	Hickory	Maple	Oak
Price Column	5	2	2	2	1

Species	Rustic Alder	Walnut
Price Column	5	2 (+25%)

Overlay	Modern
Outside Profile	L
Hinge	Concealed

Options	**Is it available?**	
5-Piece Header	Yes $93 per drawer header	page S-33
Profiled Header	No	
Regent Profile	No	
Optional Edge	Yes A, Deco, F, H, M, Z2	page S-34
Furniture Pegs	Yes	page S-35
Finger Routes	No	
Bevel Pulls	No	
Insert Doors	Yes Block 9500	
Mullion Doors	Yes Block 9530	
Thornton Insert Door	Yes Block 9520	
Veg Storage Drawer	Yes Block 9820	
Curved Doors	No	
Wall Cabinets	Yes	
Base Cabinets	Yes	
Tall Cabinets	Yes	
Vanity Cabinets	Yes	

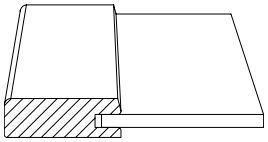

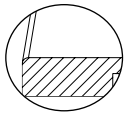

Outside profile is L

NOTES/CAUTIONS

1. 5-piece header only available on drawer headers 5 7/16" tall and greater.
2. Glaze may not be as noticeable on this door style.
3. Door and drawer hardware required.
4. Veneer center panel may have color variation from solid wood frame.
5. See Bonita for solid panel option.
6. The grain on the drawer header center panel runs vertically.
7. See Bedford for traditional overlay option.

© Copyright StarMark Cabinetry FEBRUARY 2022

BRISBANE

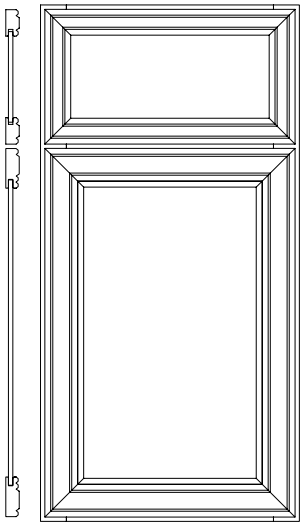

Standard 5-piece drawer header

Door Frame: ¾" thick mitered 2¼" stiles and rails
Door and Drawer Header Center Panel: ¼" veneer
Drawer Header Stile and Rail Width: 1½"

Species	Cherry	Hickory	Maple	Oak	
Price Column	5	3	4	3	
Overlay	Modern				
Outside Profile	Unique				
Hinge	Concealed				
Options	**Is it available?**				
5-Piece Header	Standard				
Profiled Header	No				
Regent Profile	No				
Optional Edge	No				
Furniture Pegs	No				
Finger Routes	No				
Bevel Pulls	No				
Insert Doors	Yes		Block 9500		
Mullion Doors	Yes		Block 9530		
Thornton Insert Door	No				
Veg Storage Drawer	Yes Built with Lancaster style header		Block 9820		
Curved Doors	No				
Wall Cabinets	Yes				
Base Cabinets	Yes				
Tall Cabinets	Yes				
Vanity Cabinets	Yes				

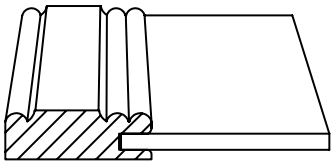

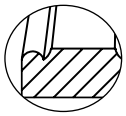

Outside profile is Unique

NOTES/CAUTIONS

1. 5-piece header only available on drawer headers 5 7/16" tall and greater.
2. Door and drawer hardware required.
3. Veneer center panel may have color variation from solid wood frame.
4. The grain on the drawer header center panel runs horizontally.

© Copyright StarMark Cabinetry FEBRUARY 2022

CALAIS

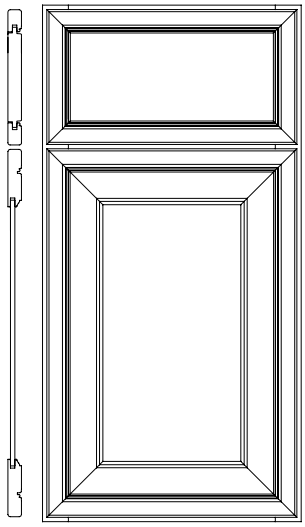

Standard 5-piece drawer header

Door Frame: ¾" thick mitered 3¼" stiles and rails
Door Center panel: ¼" veneer
Drawer Header Center Panel: Solid ⅝" flat panel
Drawer Header Stile and Rail Width: 1¼"

Species	Cherry	Hickory	Maple
Price Columns	8	6	7
Overlay	Modern		
Outside Profile	L		
Hinge	Concealed		
Options	**Is it available?**		
5-Piece Header	Standard		
Profiled Header	No		
Regent Profile	No		
Optional Edge	No		
Furniture Pegs	No		
Finger Routes	No		
Bevel Pulls	No		
Insert Doors	Yes		Block 9500
Mullion Doors	Yes		Block 9530
Thornton Insert Door	No		
Veg Storage Drawer	Yes Built with Lancaster style header		Block 9820
Curved Doors	No		
Wall Cabinets	Yes		
Base Cabinets	Yes		
Tall Cabinets	Yes		
Vanity Cabinets	Yes		

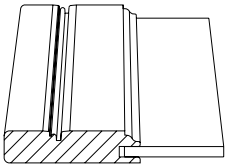

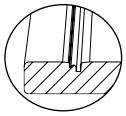

Outside profile is L

NOTES/CAUTIONS

1. 5-piece header only available on drawer headers 5 7/16" tall and greater
2. Door and drawer hardware required
3. Veneer center panel may have color variation from solid wood frame.
4. The grain on the drawer header center panel runs horizontally.

Full Access for Modern door styles

A cabinet that is 24" to 42" wide can be manufactured without the face frame center mullion. To order, prefix the cabinet nomenclature with a **2.** Styling will be butt doors. This is a no-charge option.

© Copyright StarMark Cabinetry FEBRUARY 2022

CHAPPELL NEW!

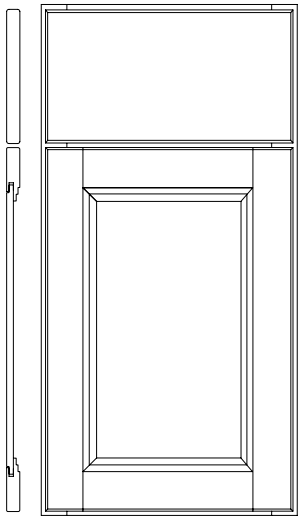

Standard slab drawer header

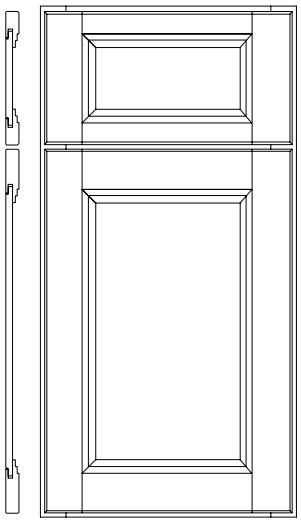

Optional 5-piece drawer header

Door Frame: ¾" thick square 2¾" stiles and rails
Door Center Panel: Solid ⅜" reverse flat panel
Drawer Header Center Panel: Solid ⅜" reverse flat panel on 5-piece drawer header
Drawer Header Stile Width: 2¾"
Drawer Header Rail Width: 1⅞"

Species	Alder	Cherry	Hickory	Maple	Oak
Price Column	10	10	9	10	9
Species	Rustic Alder		Qtr. Sawn Oak		
Price Column	10		10		
Overlay	Modern				
Outside Profile	L				
Hinge	Concealed				
Options	**Is it available?**				
5-Piece Header	Yes $93 per drawer header page S-33				
Profiled Header	No				
Regent Profile	No				
Optional Edge	Yes A, Deco, F, H, M, Z2 page S-34				
Furniture Pegs	Yes page S-35				
Finger Routes	No				
Bevel Pulls	No				
Insert Doors	Yes Block 9500				
Mullion Doors	Yes Block 9530				
Thornton Insert Door	Yes Block 9520				
Veg Storage Drawer	Yes Block 9820 Built with Lancaster style header				
Curved Doors	No				
Wall Cabinets	Yes				
Base Cabinets	Yes				
Tall Cabinets	Yes				
Vanity Cabinets	Yes				

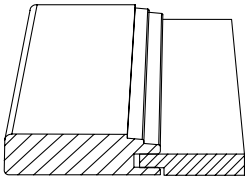

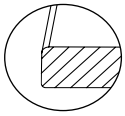

Outside profile is L

NOTES/CAUTIONS

1. 5-piece header only available on drawer headers 5 7/16" tall and greater.
2. Door and drawer hardware required.
3. The grain on the drawer header center panel runs horizontally.
4. See Cambridge for inset option.

© Copyright StarMark Cabinetry FEBRUARY 2022

Customer Service: 800-550-2934 Technical: 800-551-3404

CHESAPEAKE

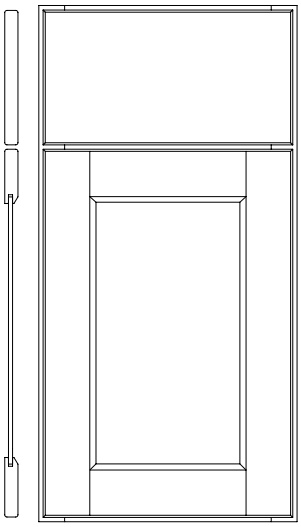

Standard slab drawer header

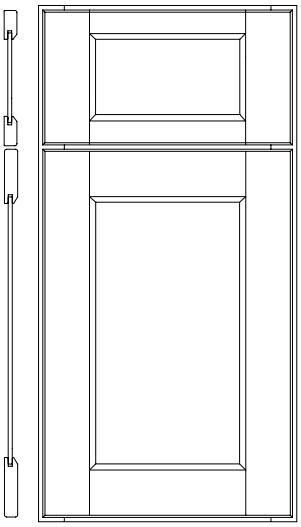

Optional 5-piece drawer header

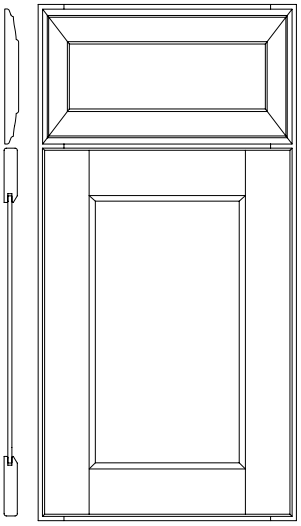

Optional Regent drawer profile

Door Frame: ¾" thick square 2¾" stiles and rails
Door Center Panel: ¼" veneer
Drawer Header Center Panel: ¼" veneer on 5-piece drawer header
Drawer Header Stile Width: 2¾"
Drawer Header Rail Width: 1½"

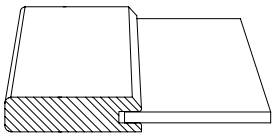

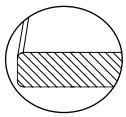

Outside profile is L

Species	Alder	Cherry	Hickory	Maple	Oak
Price Column	5	5	4	5	3
Species	Rustic Alder				
Price Column	5				
Overlay	Modern				
Outside Profile	L				
Hinge	Concealed				
Options	**Is it available?**				
5-Piece Header	Yes $93 per drawer header page S-33				
Profiled Header	No				
Regent Profile	Yes $27 per drawer header page S-36				
Optional Edge	Yes A, Deco, F, H, M, Z2 page S-34				
Furniture Pegs	Yes page S-35				
Finger Routes	No				
Bevel Pulls	No				
Insert Doors	Yes Block 9500				
Mullion Doors	Yes Block 9530				
Thornton Insert Door	Yes Block 9520				
Veg Storage Drawer	Yes Block 9820				
Curved Doors	No				
Wall Cabinets	Yes				
Base Cabinets	Yes				
Tall Cabinets	Yes				
Vanity Cabinets	Yes				

NOTES/CAUTIONS

1. 5-piece header only available on drawer headers 5 7/16" tall and greater.
2. Door and drawer hardware required.
3. The grain on the drawer header center panel runs horizontally.
4. See Clifton for solid panel option.

© Copyright StarMark Cabinetry FEBRUARY 2022

CLIFTON

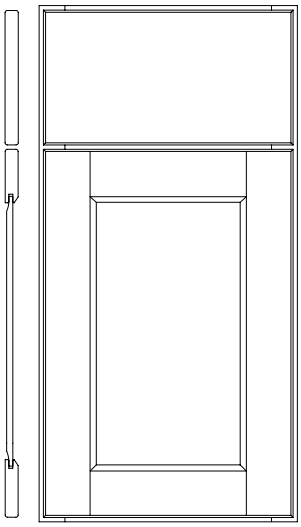

Standard slab drawer header

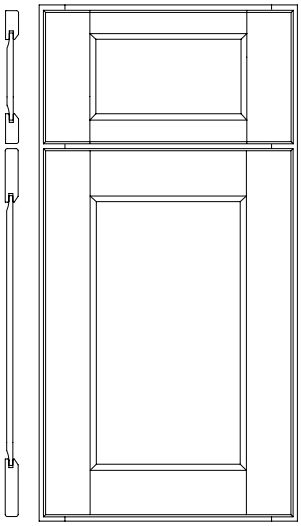

Optional 5-piece drawer header

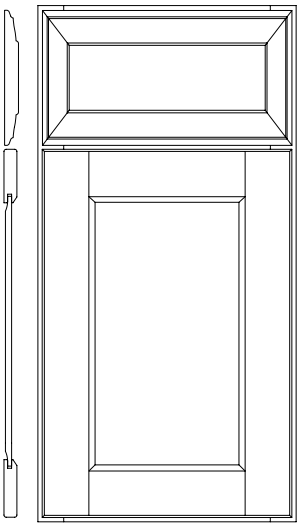

Optional Regent drawer profile

Door Frame: ¾" thick square 2¾" stiles and rails
Door Center Panel: Solid ⅜" reverse flat panel
Drawer Header Center Panel: Solid ⅜" reverse flat panel on 5-piece drawer header
Drawer Header Stile Width: 2¾"
Drawer Header Rail Width: 1½"

Species	Alder	Cherry	Hickory	Maple	Oak
Price Column	7	7	6	7	5
Species	Rustic Alder				
Price Column	7				
Overlay	Modern				
Outside Profile	L				
Hinge	Concealed				
Options	**Is it available?**				
5-Piece Header	Yes $93 per drawer header page S-33				
Profiled Header	No				
Regent Profile	Yes $27 per drawer header page S-36				
Optional Edge	Yes A, Deco, F, H, M, Z2 page S-34				
Furniture Pegs	Yes page S-35				
Finger Routes	No				
Bevel Pulls	No				
Insert Doors	Yes Block 9500				
Mullion Doors	Yes Block 9530				
Thornton Insert Door	Yes Block 9520				
Veg Storage Drawer	Yes Block 9820				
Curved Doors	No				
Wall Cabinets	Yes				
Base Cabinets	Yes				
Tall Cabinets	Yes				
Vanity Cabinets	Yes				

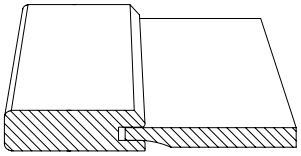

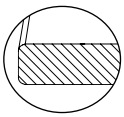

Outside profile is L

NOTES/CAUTIONS

1. 5-piece header only available on drawer headers 5 7/16" tall and greater.
2. Door and drawer hardware required.
3. The grain on the drawer header center panel runs horizontally.
4. See Chesapeake for veneer panel option.

© Copyright StarMark Cabinetry FEBRUARY 2022

CORALVILLE

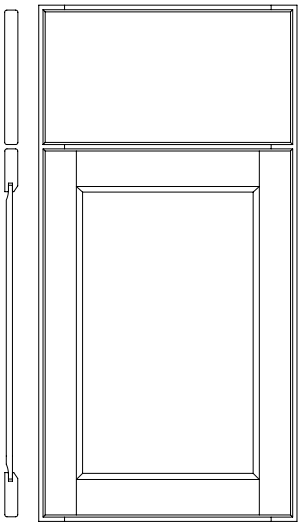

Standard slab drawer header

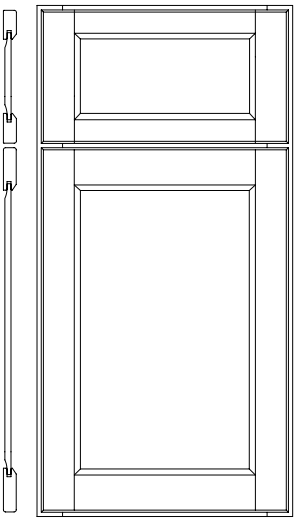

Optional 5-piece drawer header

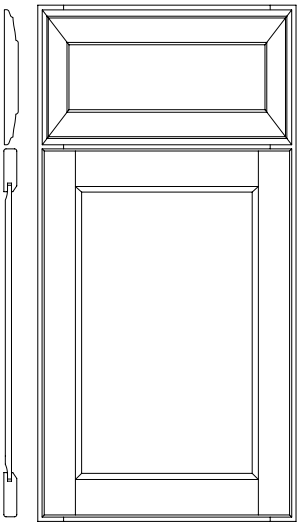

Optional Regent drawer profile

Door Frame: ¾" thick square 2¼" stiles and rails
Door Center Panel: Solid ⅜" reverse flat panel
Drawer Header Center Panel: Solid ⅜" reverse flat panel on 5-piece drawer header
Drawer Header Stile Width: 2¼"
Drawer Header Rail Width: 1½"

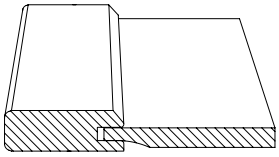

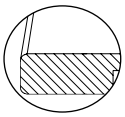

Outside profile is L

Species	Alder	Cherry	Hickory	Maple	Oak
Price Column	8	8	6	8	6
Species	Rustic Alder		Qtr Sawn Oak	Walnut	
Price Column	8		9	8 (+25%)	
Overlay	Modern				
Outside Profile	L				
Hinge	Concealed				
Options	**Is it available?**				
5-Piece Header	Yes $93 per drawer header page S-33				
Profiled Header	No				
Regent Profile	Yes $27 per drawer header page S-36				
Optional Edge	Yes A, Deco, F, H, M, Z2 page S-34				
Furniture Pegs	Yes page S-35				
Finger Routes	No				
Bevel Pulls	No				
Insert Doors	Yes Block 9500				
Mullion Doors	Yes Block 9530				
Thornton Insert Door	Yes Block 9520				
Veg Storage Drawer	Yes Block 9820				
Curved Doors	No				
Wall Cabinets	Yes				
Base Cabinets	Yes				
Tall Cabinets	Yes				
Vanity Cabinets	Yes				

NOTES/CAUTIONS

1. 5-piece header only available on drawer headers 5⁷⁄₁₆" tall and greater.
2. Door and drawer hardware required.
3. The grain on the drawer header center panel runs horizontally.
4. See page S-6 for information on Modifications and Accessories when specifying Quarter Sawn Oak.
5. See Cosmopolitan for veneer panel option.
6. See Charlotte for inset option.

Full Access for Modern door styles

A cabinet that is 24" to 42" wide can be manufactured without the face frame center mullion. To order, prefix the cabinet nomenclature with a **2.** Styling will be butt doors. This is a no-charge option.

© Copyright StarMark Cabinetry FEBRUARY 2022

COSMOPOLITAN

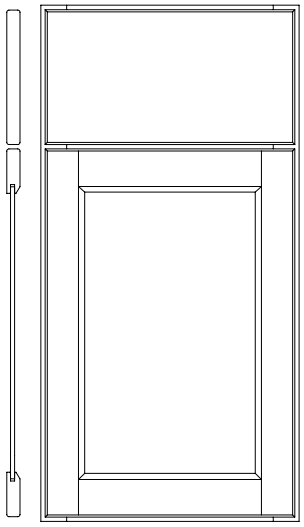

Standard slab drawer header

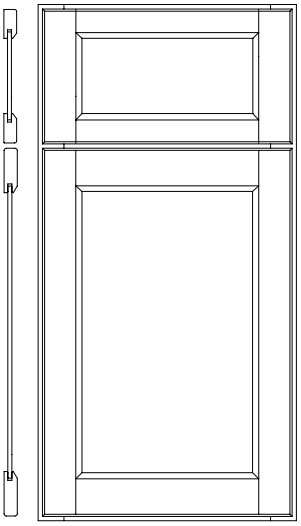

Optional 5-piece drawer header

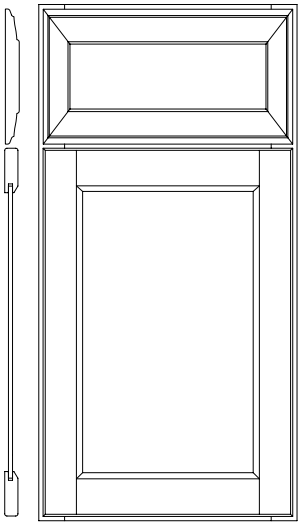

Optional Regent drawer profile

Door Frame: ¾" thick square 2¼" stiles and rails
Door Center Panel: ¼" veneer
Drawer Header Center Panel: ¼" veneer on 5-piece drawer header
Drawer Header Stile Width: 2¼"
Drawer Header Rail Width: 1½"

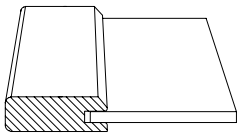

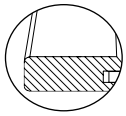

Outside profile is L

Species	Alder	Cherry	Hickory	Maple	Oak
Price Column	5	5	3	3	2
Species	Rustic Alder		Qtr Sawn Oak	Walnut	
Price Column	5		7	5 (+25%)	
Overlay	Modern				
Outside Profile	L				
Hinge	Concealed				
Options	**Is it available?**				
5-Piece Header	Yes $93 per drawer header			page S-33	
Profiled Header	No				
Regent Profile	Yes $27 per drawer header			page S-36	
Optional Edge	Yes A, Deco, F, H, M, Z2			page S-34	
Furniture Pegs	Yes			page S-35	
Finger Routes	No				
Bevel Pulls	No				
Insert Doors	Yes		Block 9500		
Mullion Doors	Yes		Block 9530		
Thornton Insert Door	Yes		Block 9520		
Veg Storage Drawer	Yes		Block 9820		
Curved Doors	No				
Wall Cabinets	Yes				
Base Cabinets	Yes				
Tall Cabinets	Yes				
Vanity Cabinets	Yes				

NOTES/CAUTIONS

1. 5-piece header only available on drawer headers 5 7/16" tall and greater.
2. Door and drawer hardware required.
3. The grain on the drawer header center panel runs horizontally.
4. See page S-6 for information on Modifications and Accessories when specifying Quarter Sawn Oak.
5. See Coralville for solid panel option.

© Copyright StarMark Cabinetry FEBRUARY 2022

EDGEMORE NEW!

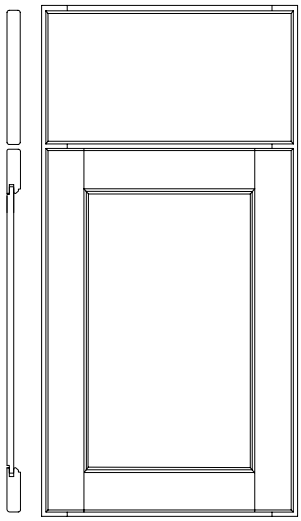

Standard slab drawer header

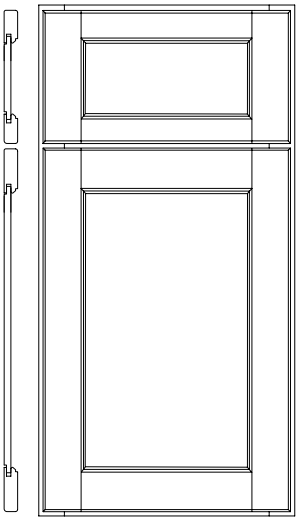

Optional 5-piece drawer header

Door Frame: ¾" thick square 2¼" stiles and rails
Door Center Panel: Solid ⅜" reverse flat panel
Drawer Header Center Panel: Solid ⅜" reverse flat panel on 5-piece drawer header
Drawer Header Stile Width: 2¼"
Drawer Header Rail Width: 1½"

Species	Alder	Cherry	Hickory	Maple	Oak
Price Column	6	6	5	6	5
Species	Rustic Alder	Qtr. Sawn Oak			
Price Column	6	6			
Overlay	Modern				
Outside Profile	L				
Hinge	Concealed				
Options	**Is it available?**				
5-Piece Header	Yes $93 per drawer header				page S-33
Profiled Header	No				
Regent Profile	No				
Optional Edge	Yes A, Deco, F, H, M, Z2				page S-34
Furniture Pegs	Yes				page S-35
Finger Routes	No				
Bevel Pulls	No				
Insert Doors	Yes		Block 9500		
Mullion Doors	Yes		Block 9530		
Thornton Insert Door	Yes		Block 9520		
Veg Storage Drawer	Yes		Block 9820		
Curved Doors	No				
Wall Cabinets	Yes				
Base Cabinets	Yes				
Tall Cabinets	Yes				
Vanity Cabinets	Yes				

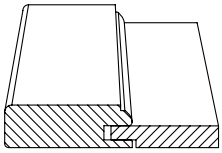

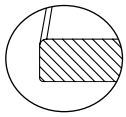

Outside profile is L

NOTES/CAUTIONS

1. 5-piece header only available on drawer headers 5⁷⁄₁₆" tall and greater.
2. Door and drawer hardware required.
3. The grain on the drawer header center panel runs horizontally.
4. See Edinburgh for veneer panel option.
5. See Evaro for inset option.

Full Access for Modern door styles

A cabinet that is 24" to 42" wide can be manufactured without the face frame center mullion. To order, prefix the cabinet nomenclature with a **2.** Styling will be butt doors. This is a no-charge option.

© Copyright StarMark Cabinetry FEBRUARY 2022

EDINBURGH NEW!

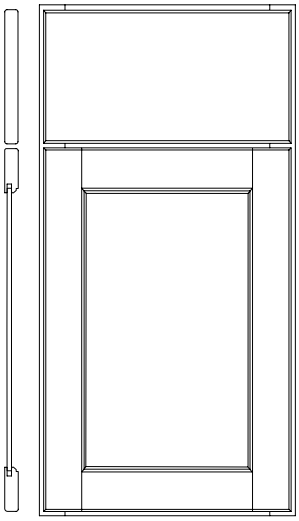

Standard slab drawer header

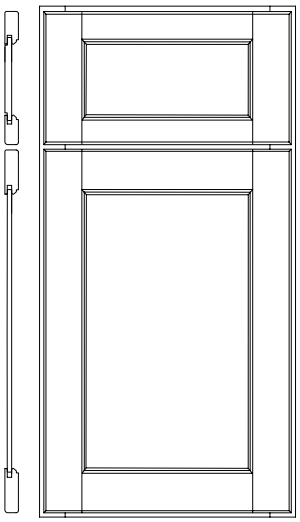

Optional 5-piece drawer header

Door Frame: ¾" thick square 2¼" stiles and rails
Door Center Panel: ¼" veneer
Drawer Header Center Panel: ¼" veneer on 5-piece drawer header
Drawer Header Stile Width: 2¼"
Drawer Header Rail Width: 1½"

Species	Alder	Cherry	Hickory	Maple	Oak
Price Column	4	4	3	4	3
Species	Rustic Alder		Qtr. Sawn Oak		
Price Column	4		4		
Overlay	Modern				
Outside Profile	L				
Hinge	Concealed				
Options	**Is it available?**				
5-Piece Header	Yes $93 per drawer header				page S-33
Profiled Header	No				
Regent Profile	No				
Optional Edge	Yes A, Deco, F, H, M, Z2				page S-34
Furniture Pegs	Yes				page S-35
Finger Routes	No				
Bevel Pulls	No				
Insert Doors	Yes		Block 9500		
Mullion Doors	Yes		Block 9530		
Thornton Insert Door	Yes		Block 9520		
Veg Storage Drawer	Yes		Block 9820		
Curved Doors	No				
Wall Cabinets	Yes				
Base Cabinets	Yes				
Tall Cabinets	Yes				
Vanity Cabinets	Yes				

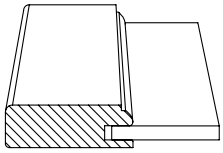

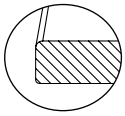

Outside profile is L

NOTES/CAUTIONS

1. 5-piece header only available on drawer headers 5 7/16" tall and greater.
2. Door and drawer hardware required.
3. Veneer center panel may have color variation from solid wood frame.
4. The grain on the drawer header center panel runs horizontally.
5. See Edgemore for solid panel option.

© Copyright StarMark Cabinetry FEBRUARY 2022

ELLINGTON

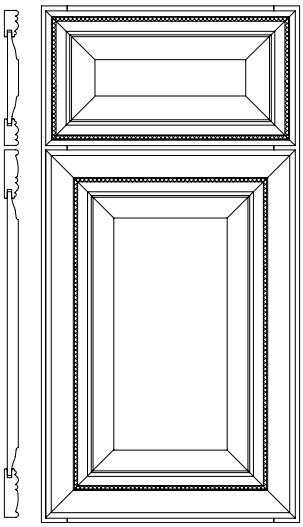

Standard 5-piece drawer header

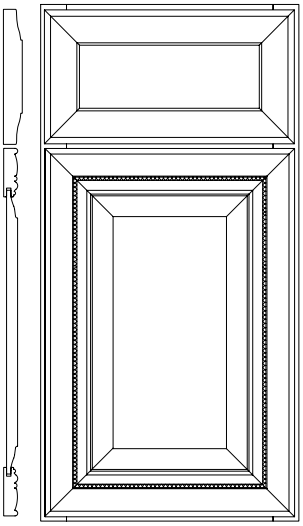

Optional profiled drawer header

Door Frame: ¾" thick mitered 2¾" stiles and rails
Door Center Panel: Solid ⅝" raised panel
Drawer Header Center Panel: Solid ⅝" raised panel
Drawer Header Stile and Rail Width: 1½"

Species	Alder	Cherry	Maple	Rustic Alder
Price Column	10	10	10	10
Overlay	Modern			
Outside Profile	Unique			
Hinge	Concealed			
Options	**Is it available?**			
5-Piece Header	Standard			
Profiled Header	Yes $33 per drawer header page S-36			
Regent Profile	No			
Optional Edge	No			
Furniture Pegs	No			
Finger Routes	No			
Bevel Pulls	No			
Insert Doors	Yes		Block 9500	
Mullion Doors	Yes		Block 9530	
Thornton Insert Door	No			
Veg Storage Drawer	Yes Built with Lancaster style header		Block 9820	
Curved Doors	No			
Wall Cabinets	Yes			
Base Cabinets	Yes			
Tall Cabinets	Yes			
Vanity Cabinets	Yes			

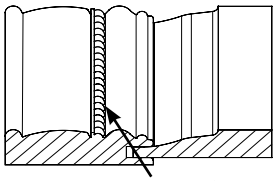

Egg and Dart moulding

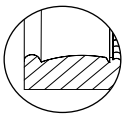

Outside profile is Unique

NOTES/CAUTIONS

1. 5-piece header only available on drawer headers 5⁷⁄₁₆" tall and greater. Drawer headers less than 6½" in height will be a flat panel.
2. Doors on cabinets ASCW2124, ASCW2421, ASBC__FS, SSSW33, ASSSW, SBC33, SCW21, SBC33FS, LSB33 and SLSB33 will be flat panel.
3. Door and drawer hardware required.
4. Mullion doors will only accept ⅛" thick glass. Glass clips will not be routed into door frame.
5. The grain on the drawer header center panel runs horizontally.

Full Access for Modern door styles

A cabinet that is 24" to 42" wide can be manufactured without the face frame center mullion. To order, prefix the cabinet nomenclature with a **2.** Styling will be butt doors. This is a no-charge option.

© Copyright StarMark Cabinetry FEBRUARY 2022

FARMINGTON

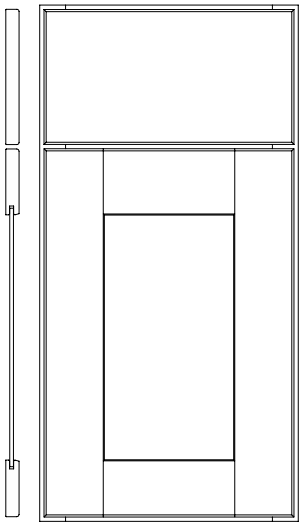

Standard slab drawer header

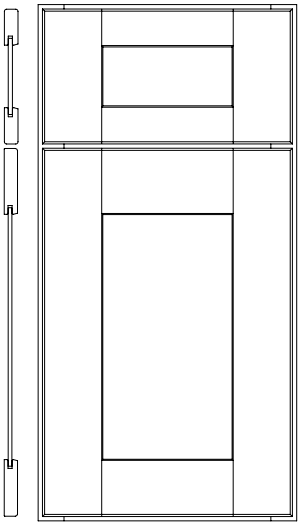

Optional 5-piece drawer header

Door Frame: ¾" thick square 2¾" stiles and rails
Door Center Panel: ¼" veneer
Drawer Header Center Panel: ¼" veneer on 5-piece drawer header
Drawer Header Stile Width: 2¾"
Drawer Header Rail Width: 1½"

Species	Alder	Cherry	Hickory	Maple	Oak	
Price Column	5	6	4	5	3	

Species	Rustic Alder	Qtr. Sawn Oak	Walnut
Price Column	5	7	6 (+25%)

Overlay	Modern
Outside Profile	L
Hinge	Concealed

Options	**Is it available?**	
5-Piece Header	Yes $93 per drawer header	page S-33
Profiled Header	No	
Regent Profile	No	
Optional Edge	Yes A, Deco, F, H, M, Z2	page S-34
Furniture Pegs	Yes	page S-35
Finger Routes	No	
Bevel Pulls	No	
Insert Doors	Yes Block 9500	
Mullion Doors	Yes Block 9530	
Thornton Insert Door	Yes Block 9520	
Veg Storage Drawer	Yes Block 9820	
Curved Doors	No	
Wall Cabinets	Yes	
Base Cabinets	Yes	
Tall Cabinets	Yes	
Vanity Cabinets	Yes	

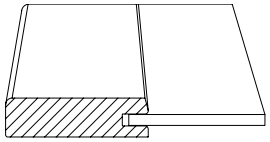

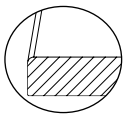

Outside profile is L

NOTES/CAUTIONS

1. 5-piece header only available on drawer headers 5 7/16" tall and greater.
2. Door and drawer hardware required.
3. Veneer center panel may have color variation from solid wood frame.
4. See page S-6 for information on Modifications and Accessories when specifying Quarter Sawn Oak.
5. Glaze may not be as noticeable on this door style.
6. See Fullerton for solid panel option.
7. The grain on the drawer header center panel runs vertically.
8. Doors on these cabinets have 2¼" stiles: SCW21_, LSB33, SBC33FS, SLSB33, ASCW2124, ASCW2421, ASBC_FS, SSSW33, ASSSW, SBC33.

© Copyright StarMark Cabinetry FEBRUARY 2022

FULLERTON

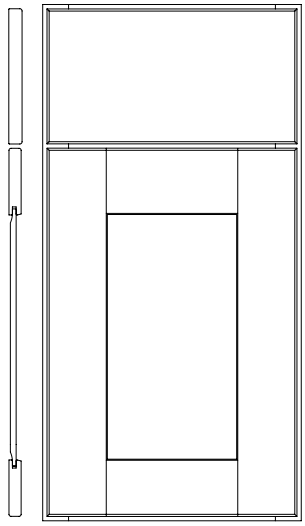

Standard slab drawer header

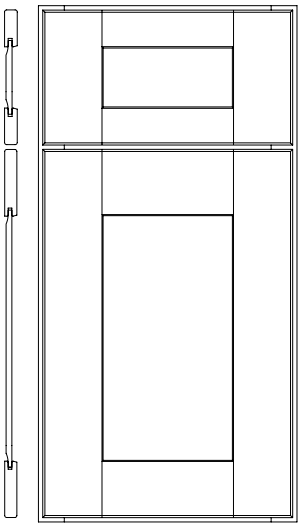

Optional 5-piece drawer header

Door Frame: ¾" thick square 2¾" stiles and rails
Door Center Panel: Solid ⅜" reverse flat panel
Drawer Header Center Panel: Solid ⅜" reverse flat panel on 5-piece drawer header
Drawer Header Stile Width: 2¾"
Drawer Header Rail Width: 1½"

Species	Alder	Cherry	Hickory	Maple	Oak	
Price Column	7	7	6	7	5	

Species	Rustic Alder	Rustic Hickory	Walnut
Price Column	7	6	7 (+25%)

Overlay	Modern
Outside Profile	L
Hinge	Concealed

Options	**Is it available?**	
5-Piece Header	Yes $93 per drawer header	page S-33
Profiled Header	No	
Regent Profile	No	
Optional Edge	Yes A, Deco, F, H, M, Z2	page S-34
Furniture Pegs	Yes	page S-35
Finger Routes	No	
Bevel Pulls	No	
Insert Doors	Yes Block 9500	
Mullion Doors	Yes Block 9530	
Thornton Insert Door	Yes Block 9520	
Veg Storage Drawer	Yes Block 9820	
Curved Doors	No	
Wall Cabinets	Yes	
Base Cabinets	Yes	
Tall Cabinets	Yes	
Vanity Cabinets	Yes	

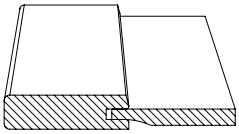

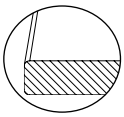

Outside profile is L

NOTES/CAUTIONS

1. 5-piece header only available on drawer headers 5⁷⁄₁₆" tall and greater.
2. Door and drawer hardware required.
3. Glaze may not be as noticeable on this door style.
4. The grain on the drawer header center panel runs horizontally.
5. See Farmington for veneer panel option.
6. See Fairhaven for inset option.
7. Doors on these cabinets have 2¼" stiles: SCW21_, LSB33, SBC33FS, SLSB33, ASCW2124, ASCW2421, ASBC_FS, SSSW33, ASSSW, SBC33.

Full Access for Modern door styles

A cabinet that is 24" to 42" wide can be manufactured without the face frame center mullion. To order, prefix the cabinet nomenclature with a **2.** Styling will be butt doors. This is a no-charge option.

© Copyright StarMark Cabinetry FEBRUARY 2022

GALLANT

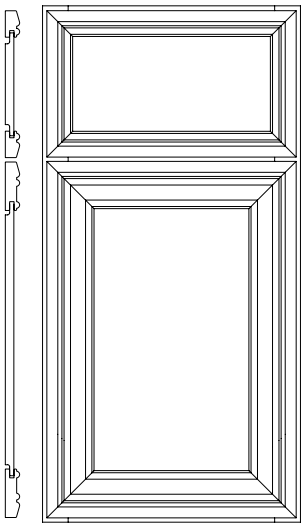

Standard 5-piece drawer header

Door Frame: ⅞" thick mitered 2¾" stiles and rails
Door Center Panel: Solid ⅜" reverse flat panel
Drawer Header Center Panel: Solid ⅜" reverse flat panel
Drawer Header Stile and Rail Width: 1½"

Species	Cherry	Maple	
Price Column	9	8	
Overlay	Modern		
Outside Profile	Aero		
Hinge	Concealed		
Options	**Is it available?**		
5-Piece Header	Standard		
Profiled Header	No		
Regent Profile	No		
Optional Edge	No		
Furniture Pegs	No		
Finger Routes	No		
Bevel Pulls	No		
Insert Doors	Yes		Block 9500
Mullion Doors	Yes		Block 9530
Thornton Insert Door	No		
Veg Storage Drawer	Yes Built with Lancaster style header		Block 9820
Curved Doors	No		
Wall Cabinets	Yes		
Base Cabinets	Yes		
Tall Cabinets	Yes		
Vanity Cabinets	Yes		

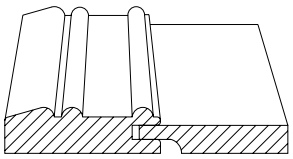

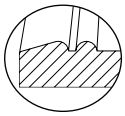

Outside profile is Aero

NOTES/CAUTIONS

1. 5-piece header only available on drawer headers 5⁷⁄₁₆" tall and greater.
2. Door and drawer hardware required.
3. The grain on the drawer header center panel runs horizontally.

© Copyright StarMark Cabinetry FEBRUARY 2022

GEORGETOWN

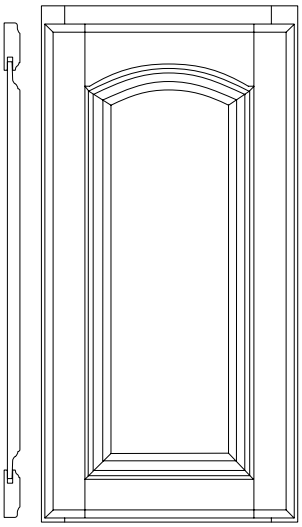

Georgetown arched door

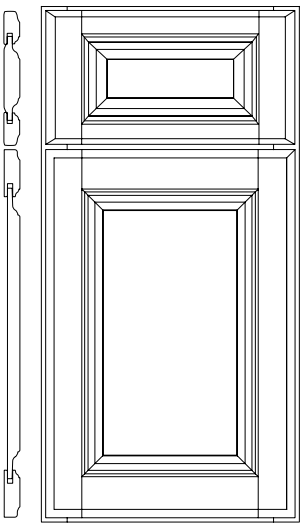

Optional 5-piece drawer header

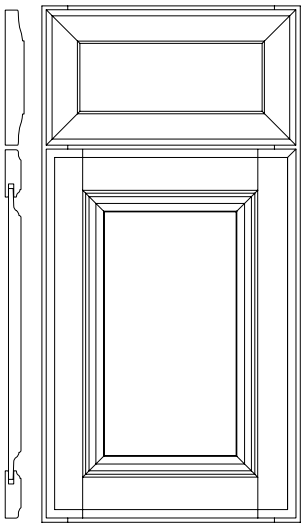

Optional profiled drawer header

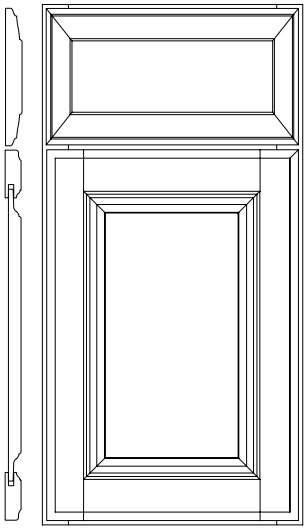

Optional Regent drawer profile

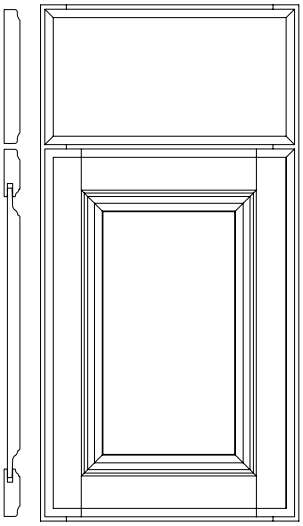

Standard slab drawer header

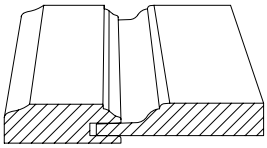

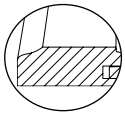

Outside profile is Z2

Door Frame: ¾" thick square 2¼" stiles and rails
Door Center Panel: Solid ⅝" raised panel
Drawer Header Center Panel: Solid ⅝" raised panel on 5-piece drawer header
Drawer Header Stile Width: 2¼"
Drawer Header Rail Width: 1½"

Species	Alder	Cherry	Hickory	
Price Column	6	7	6	
Species	Maple	Oak		
Price Column	7	4		
Species	Rustic Alder	Rustic Hickory		
Price Column	6	6		
Overlay	Modern			
Outside Profile	Z2			
Hinge	Concealed			
Options	**Is it available?**			
5-Piece Header	Yes $93 per drawer header			page S-33
Profiled Header	Yes $33 per drawer header			page S-36
Regent Profile	Yes $27 per drawer header			page S-36
Optional Edge	Yes A, Deco, F, H, L, M			page S-34
Furniture Pegs	Yes			page S-35
Finger Routes	No			
Bevel Pulls	No			
Insert Doors	Yes		Block 9500	
Mullion Doors	Yes		Block 9530	
Thornton Insert Door	Yes		Block 9520	
Veg Storage Drawer	Yes		Block 9820	
Curved Doors	Yes			
Wall Cabinets	Yes			
Base Cabinets	Accord			
Tall Cabinets	Upper doors - Yes Lower doors will be Accord			
Vanity Cabinets	Yes			

NOTES/CAUTIONS

1. 5-piece header only available on drawer headers 5⁷⁄₁₆" tall and greater.
2. Glaze may not be as noticeable on this door style.
3. Door and drawer hardware required.
4. Upper and lower doors will be Georgetown arched door when a vanity cabinet is 31½" or taller. In vanity cabinets less than 31½", the lower doors will be Accord.
5. The grain on the drawer header center panel runs horizontally.

Full Access for Modern door styles

A cabinet that is 24" to 42" wide can be manufactured without the face frame center mullion. To order, prefix the cabinet nomenclature with a **2.** Styling will be butt doors. This is a no-charge option.

© Copyright StarMark Cabinetry FEBRUARY 2022

GLENDALE

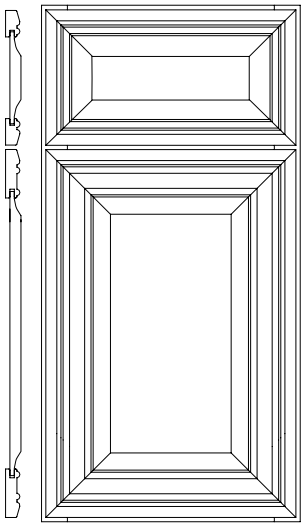

Standard 5-piece drawer header

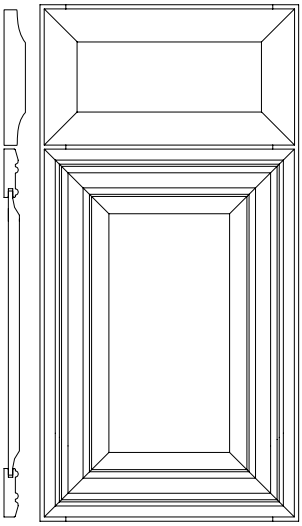

Optional profiled drawer header

Door Frame: ⅞" thick mitered 2¾" stiles and rails
Door Center Panel: Solid ⅝" raised panel
Drawer Header Center Panel: Solid ⅝" raised panel
Drawer Header Stile and Rail Width: 1½"

Species	Cherry	Maple	
Price Column	9	8	
Overlay	Modern		
Outside Profile	Aero		
Hinge	Concealed		
Options	**Is it available?**		
5-Piece Header	Standard		
Profiled Header	Yes $33 per drawer header page S-36		
Regent Profile	No		
Optional Edge	No		
Furniture Pegs	No		
Finger Routes	No		
Bevel Pulls	No		
Insert Doors	Yes		Block 9500
Mullion Doors	Yes		Block 9530
Thornton Insert Door	No		
Veg Storage Drawer	Yes		Block 9820
	Built with Lancaster style header		
Curved Doors	No		
Wall Cabinets	Yes		
Base Cabinets	Yes		
Tall Cabinets	Yes		
Vanity Cabinets	Yes		

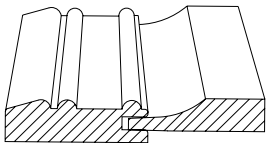

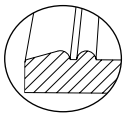

Outside profile is Aero

NOTES/CAUTIONS

1. 5-piece header only available on drawer headers 5 7/16" tall and greater. Drawer headers less than 6½" in height will be a flat panel.
2. Door and drawer hardware required.
3. Doors on cabinets ASCW2124, ASCW2421, ASBC__FS, SSSW33, ASSSW, SBC33, SCW21, SBC33FS, LSB33 and SLSB33 will be flat panel.
4. The grain on the drawer header center panel runs horizontally.

© Copyright StarMark Cabinetry FEBRUARY 2022

GRIFFON

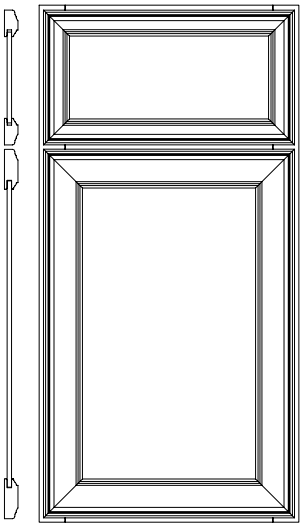

Standard 5-piece drawer header

Door Frame: ¾" thick mitered 2¼" stiles and rails
Door and Drawer Header Center Panel: ¼" veneer
Drawer Header Stile and Rail Width: 1½"

Species	Cherry	Hickory	Maple	Oak
Price Column	5	3	4	3
Overlay	Modern			
Outside Profile	Decorator			
Hinge	Concealed			
Options	**Is it available?**			
5-Piece Header	Standard			
Profiled Header	No			
Regent Profile	No			
Optional Edge	Yes A, F, H, L, M, Z2		page S-34	
Furniture Pegs	No			
Finger Routes	No			
Bevel Pulls	No			
Insert Doors	Yes		Block 9500	
Mullion Doors	Yes		Block 9530	
Thornton Insert Door	No			
Veg Storage Drawer	Yes Built with Lancaster style header		Block 9820	
Curved Doors	No			
Wall Cabinets	Yes			
Base Cabinets	Yes			
Tall Cabinets	Yes			
Vanity Cabinets	Yes			

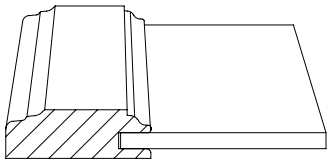

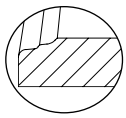

Outside profile is Decorator

NOTES/CAUTIONS

1. 5-piece header only available on drawer headers 5 7/16" tall and greater.
2. Door and drawer hardware required.
3. Veneer center panel may have color variation from solid wood frame.
4. The grain on the drawer header center panel runs horizontally.

Full Access for Modern door styles

A cabinet that is 24" to 42" wide can be manufactured without the face frame center mullion. To order, prefix the cabinet nomenclature with a **2.** Styling will be butt doors. This is a no-charge option.

© Copyright StarMark Cabinetry FEBRUARY 2022

Use Space for Notes

© Copyright StarMark Cabinetry FEBRUARY 2022

HAMPTON

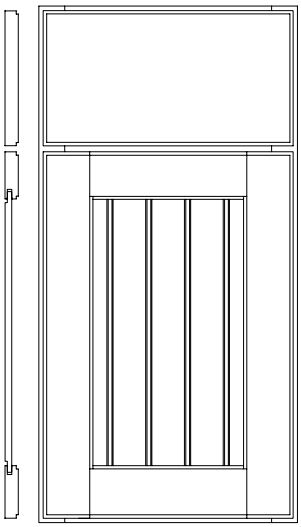

Standard slab drawer header

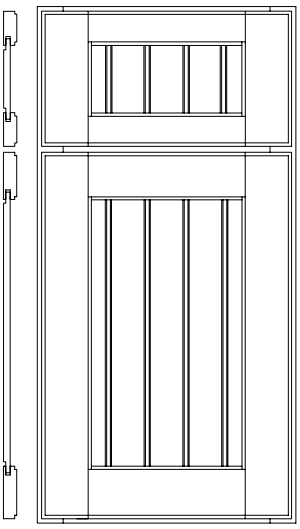

Optional 5-piece drawer header

Door Frame: ¾" thick square 2¼" stiles and rails
Door Center Panel: Solid ⅜" reverse flat panel
Drawer Header Center Panel: Solid ⅜" reverse flat panel on 5-piece drawer header
Drawer Header Stile Width: 2¼"
Drawer Header Rail Width: 1½"

Species	Alder	Cherry	Hickory	Maple	Oak	
Price Column	8	9	7	8	5	
Overlay	Modern					
Outside Profile	H					
Hinge	Concealed					
Options	**Is it available?**					
5-Piece Header	Yes $93 per drawer header					page S-33
Profiled Header	No					
Regent Profile	No					
Optional Edge	Yes A, Deco, F, L, M, Z2					page S-34
Furniture Pegs	Yes					page S-35
Finger Routes	No					
Bevel Pulls	No					
Insert Doors	Yes				Block 9500	
Mullion Doors	Yes				Block 9530	
Thornton Insert Door	Yes				Block 9520	
Veg Storage Drawer	Yes				Block 9820	
Curved Doors	No					
Wall Cabinets	Yes					
Base Cabinets	Yes					
Tall Cabinets	Yes					
Vanity Cabinets	Yes					

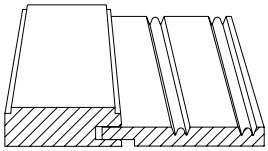

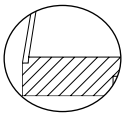

Outside profile is H

NOTES/CAUTIONS

1. 5-piece header only available on drawer headers 5 7/16" tall and greater.
2. Certain vanities are not available with the 5-piece header option.
3. Door and drawer hardware required.
4. Refer to information on S-71 for drawer headers on cabinets greater than 24 inches wide.
5. The grain on the drawer header center panel runs vertically.

Full Access for Modern door styles

A cabinet that is 24" to 42" wide can be manufactured without the face frame center mullion. To order, prefix the cabinet nomenclature with a **2.** Styling will be butt doors. This is a no-charge option.

© Copyright StarMark Cabinetry FEBRUARY 2022

WHAT TO EXPECT WHEN YOU ORDER CABINETS WIDER THAN 24" IN HAMPTON

The center panel in Hampton doors are beaded. When we manufacture them for a cabinet that is wider than 24", the drawer header is built with seven-piece construction so the beads on the drawer header will align with the beads on the doors' center panel, as pictured in illustration A.

To align the beading in drawer bases, we also use seven-piece construction, plus a wide center stile. This is illustrated below in B, C and D.

Illustration A.

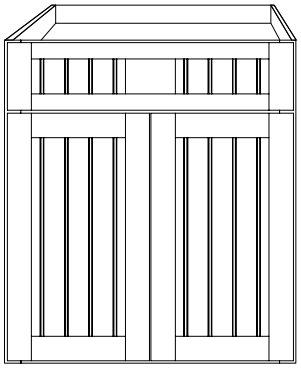

Illustration B.
DB36

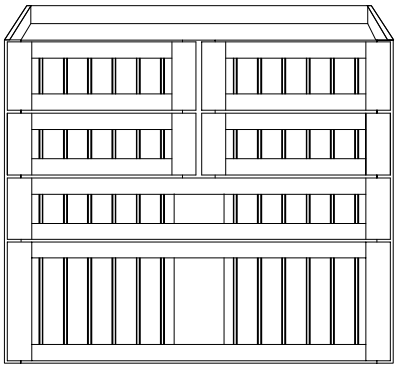

Illustration C.
3DB27, 3DB30, 3DB33 and 3DB36

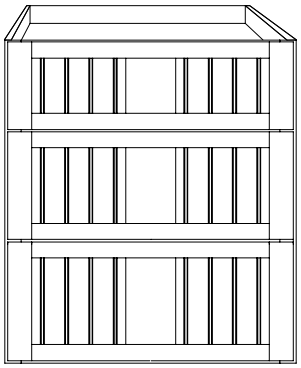

Illustration D.
2DB27, 2DB30, 2DB33, 2DB36

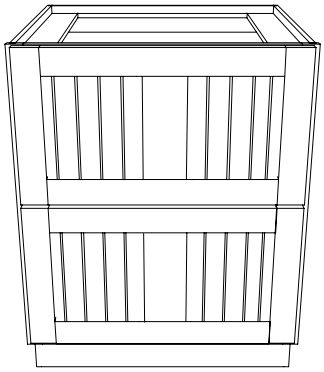

© Copyright StarMark Cabinetry FEBRUARY 2022

HANOVER

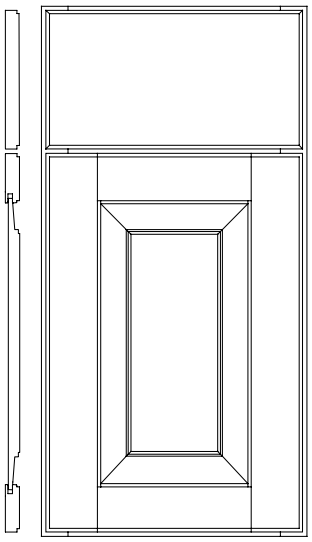

Standard slab drawer header

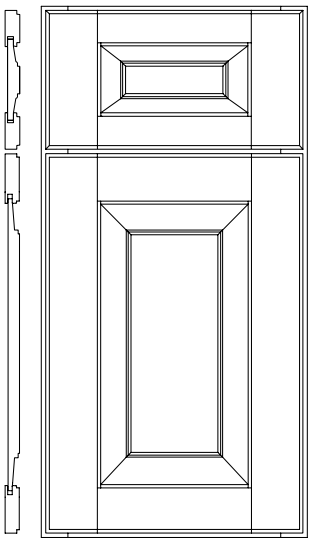

Optional 5-piece drawer header

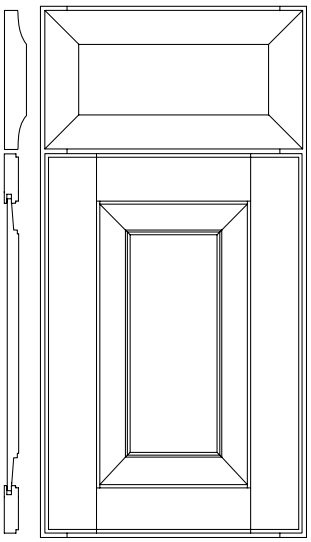

Optional profiled drawer header

Door Frame: ¾" thick square 2¼" stiles and rails
Door Center Panel: Solid ⅝" raised panel
Drawer Header Center Panel: Solid ⅝" raised panel on 5-piece drawer header
Drawer Header Stile Width: 2¼"
Drawer Header Rail Width: 1½"

Species	Alder	Cherry	Hickory	Maple	
Price Column	6	7	6	7	
Species	Oak	Rustic Alder		Walnut	
Price Column	4	6		7 (+25%)	
Overlay	Modern				
Outside Profile	H				
Hinge	Concealed				
Options	**Is it available?**				
5-Piece Header	Yes $93 per drawer header				page S-33
Profiled Header	Yes $33 per drawer header				page S-36
Regent Profile	No				
Optional Edge	Yes A, Deco, F, L, M, Z2				page S-34
Furniture Pegs	Yes				page S-35
Finger Routes	No				
Bevel Pulls	No				
Insert Doors	Yes			Block 9500	
Mullion Doors	Yes			Block 9530	
Thornton Insert Door	Yes			Block 9520	
Veg Storage Drawer	Yes			Block 9820	
Curved Doors	No				
Wall Cabinets	Yes				
Base Cabinets	Yes				
Tall Cabinets	Yes				
Vanity Cabinets	Yes				

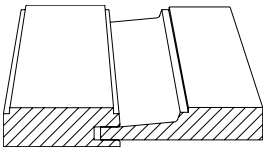

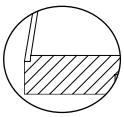

Outside profile is H

NOTES/CAUTIONS

1. 5-piece header only available on drawer headers 5 7/16" tall and greater.
2. Certain decorative hardware will not work with the 5-piece header option.
3. Door and drawer hardware required.
4. The grain on the drawer header center panel runs horizontally.
5. See Danburg for inset option.

© Copyright StarMark Cabinetry FEBRUARY 2022

HARBOR

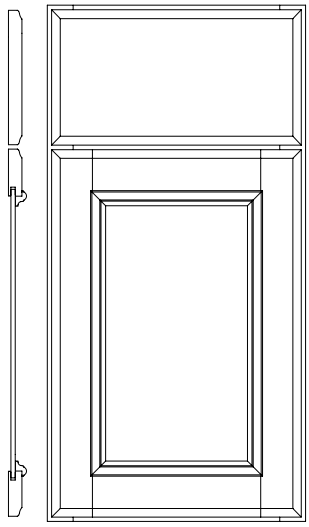

Standard slab drawer header

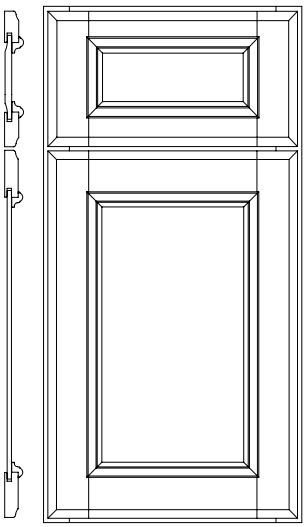

Optional 5-piece drawer header

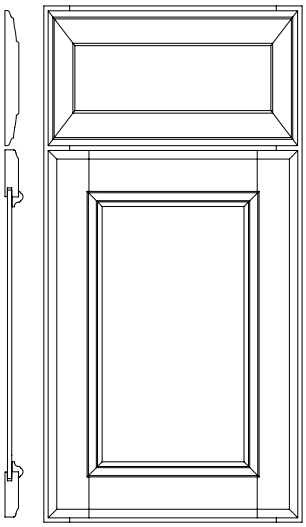

Optional Regent drawer profile

Door Frame: ¾" thick square 2¼" stiles and rails
Door Center Panel: ¼" veneer center panel trimmed with moulding
Drawer Header Center Panel: ¼" veneer center panel trimmed with moulding on 5-piece drawer header
Drawer Header Stile Width: 2¼"
Drawer Header Rail Width: 1½"

Species	Alder	Cherry	Hickory	Maple	
Price Column	7	7	6	7	
Species	Oak	Rustic Alder			
Price Column	5	7			
Overlay	Modern				
Outside Profile	Z2				
Hinge	Concealed				
Options	**Is it available?**				
5-Piece Header	Yes $93 per drawer header				page S-33
Profiled Header	No				
Regent Profile	Yes $27 per drawer header				page S-36
Optional Edge	Yes A, Deco, F, H, L, M				page S-34
Furniture Pegs	Yes				page S-35
Finger Routes	No				
Bevel Pulls	No				
Insert Doors	Yes			Block 9500	
Mullion Doors	Yes			Block 9530	
Thornton Insert Door	Yes			Block 9520	
Veg Storage Drawer	Yes			Block 9820	
Curved Doors	No				
Wall Cabinets	Yes				
Base Cabinets	Yes				
Tall Cabinets	Yes				
Vanity Cabinets	Yes				

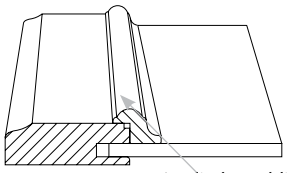

Applied moulding

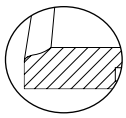

Outside profile is Z2

NOTES/CAUTIONS

1. 5-piece header only available on drawer headers 5 7/16" tall and greater.
2. Door and drawer hardware required.
3. Veneer center panel may have color variation from solid wood frame.
4. Mullion doors will not have applied moulding.
5. See Avendale for solid panel option.
6. The grain on the drawer header center panel runs horizontally.
7. Applied moulding may restrict door swing.

© Copyright StarMark Cabinetry FEBRUARY 2022

HARRISON

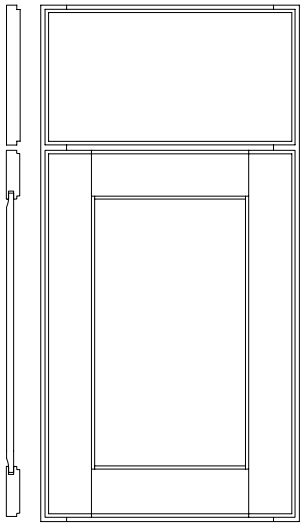

Standard slab drawer header

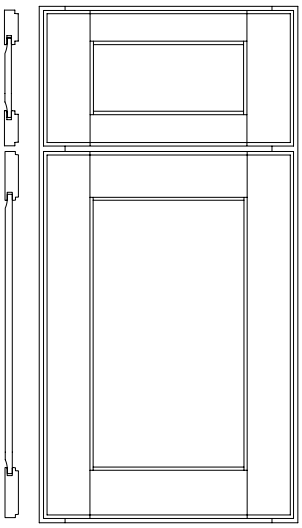

Optional 5-piece drawer header

Door Frame: ¾" thick square 2¼" stiles and rails
Door Center Panel: Solid ⅜" reverse flat panel
Drawer Header Center Panel: Solid ⅜" reverse flat panel on 5-piece drawer header
Drawer Header Stile Width: 2¼"
Drawer Header Rail Width: 1½"

Species	Alder	Cherry	Hickory	Maple	
Price Column	7	7	6	7	
Species	Oak	Rustic Alder		Walnut	
Price Column	4	7		7 (+25%)	
Overlay	Modern				
Outside Profile	H				
Hinge	Concealed				
Options	**Is it available?**				
5-Piece Header	Yes $93 per drawer header				page S-33
Profiled Header	No				
Regent Profile	No				
Optional Edge	Yes A, Deco, F, L, M, Z2				page S-34
Furniture Pegs	Yes				page S-35
Finger Routes	No				
Bevel Pulls	No				
Insert Doors	Yes			Block 9500	
Mullion Doors	Yes			Block 9530	
Thornton Insert Door	Yes			Block 9520	
Veg Storage Drawer	Yes			Block 9820	
Curved Doors	No				
Wall Cabinets	Yes				
Base Cabinets	Yes				
Tall Cabinets	Yes				
Vanity Cabinets	Yes				

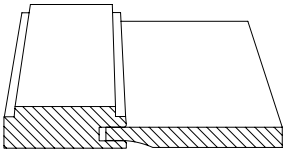

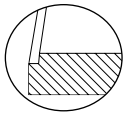

Outside profile is H

NOTES/CAUTIONS

1. 5-piece header only available on drawer headers 5 7/16" tall and greater.
2. Door and drawer hardware required.
3. The grain on the drawer header center panel runs horizontally.
4. See Hudson for veneer panel option.
5. See DeWitt for inset option.

Full Access for Modern door styles

A cabinet that is 24" to 42" wide can be manufactured without the face frame center mullion. To order, prefix the cabinet nomenclature with a **2.** Styling will be butt doors. This is a no-charge option.

© Copyright StarMark Cabinetry FEBRUARY 2022

HUDSON

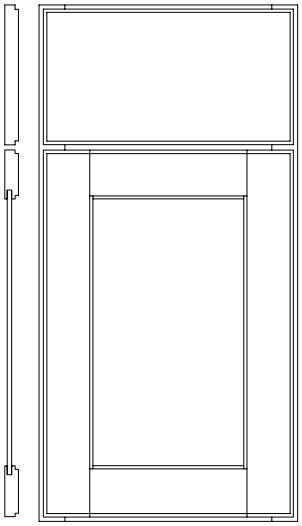

Standard slab drawer header

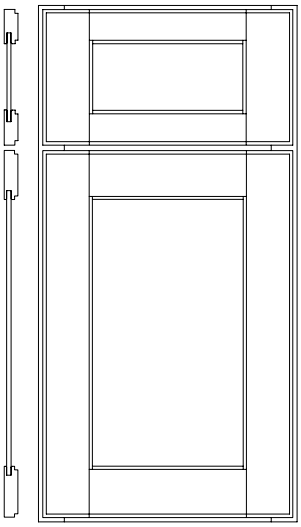

Optional 5-piece drawer header

Door Frame: ¾" thick square 2¼" stiles and rails
Door Center Panel: ¼" veneer
Drawer Header Center Panel: ¼" veneer on 5-piece drawer header
Drawer Header Stile Width: 2¼"
Drawer Header Rail Width: 1½"

Species	Alder	Cherry	Hickory	Maple	
Price Column	5	6	3	5	
Species	Oak	Rustic Alder	Walnut		
Price Column	2	5	6 (+25%)		
Overlay	Modern				
Outside Profile	H				
Hinge	Concealed				
Options	**Is it available?**				
5-Piece Header	Yes $93 per drawer header				page S-33
Profiled Header	No				
Regent Profile	No				
Optional Edge	Yes A, Deco, F, L, M, Z2				page S-34
Furniture Pegs	Yes				page S-35
Finger Routes	No				
Bevel Pulls	No				
Insert Doors	Yes			Block 9500	
Mullion Doors	Yes			Block 9530	
Thornton Insert Door	Yes			Block 9520	
Veg Storage Drawer	Yes			Block 9820	
Curved Doors	No				
Wall Cabinets	Yes				
Base Cabinets	Yes				
Tall Cabinets	Yes				
Vanity Cabinets	Yes				

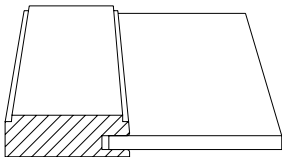

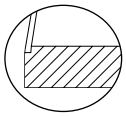

Outside profile is H

NOTES/CAUTIONS

1. 5-piece header only available on drawer headers 5 7/16" tall and greater.
2. Door and drawer hardware required.
3. Veneer center panel may have color variation from solid wood frame.
4. See Harrison for solid panel option.
5. The grain on the drawer header center panel runs horizontally.

Full Access for Modern door styles

A cabinet that is 24" to 42" wide can be manufactured without the face frame center mullion. To order, prefix the cabinet nomenclature with a **2.** Styling will be butt doors. This is a no-charge option.

© Copyright StarMark Cabinetry FEBRUARY 2022

HUNTINGFORD

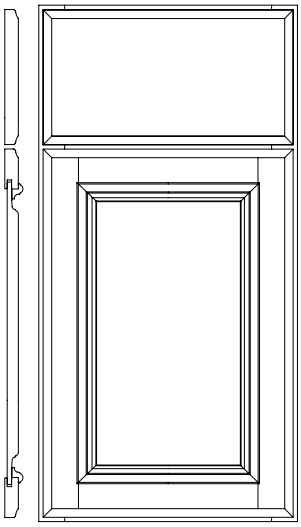

Standard slab drawer header

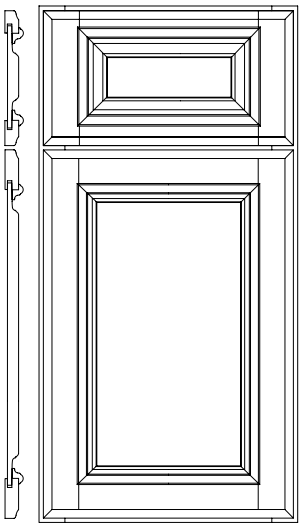

Optional 5-piece drawer header

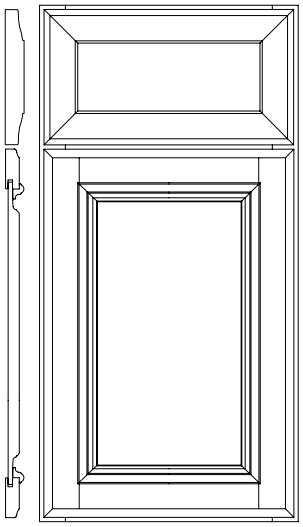

Optional profiled drawer header

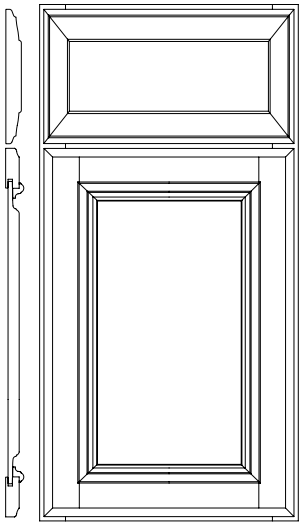

Optional Regent drawer profile

Door Frame: ¾" thick square 2¼" stiles and rails
Door Center Panel: Solid ⅝" raised panel trimmed with moulding
Drawer Header Center Panel: Solid ⅝" raised panel trimmed with moulding on 5-piece drawer header
Drawer Header Stile Width: 2¼"
Drawer Header Rail Width: 1½"

Species	Alder	Cherry	Hickory	Maple	Oak
Price Column	9	9	8	9	7
Overlay	Modern				
Outside Profile	Z2				
Hinge	Concealed				
Options	**Is it available?**				
5-Piece Header	Yes $93 per drawer header				page S-33
Profiled Header	Yes $33 per drawer header				page S-36
Regent Profile	Yes $27 per drawer header				page S-36
Optional Edge	Yes A, Deco, F, H, L, M				page S-34
Furniture Pegs	Yes				page S-35
Finger Routes	No				
Bevel Pulls	No				
Insert Doors	Yes			Block 9500	
Mullion Doors	Yes			Block 9530	
Thornton Insert Door	Yes			Block 9520	
Veg Storage Drawer	Yes			Block 9820	
Curved Doors	No				
Wall Cabinets	Yes				
Base Cabinets	Yes				
Tall Cabinets	Yes				
Vanity Cabinets	Yes				

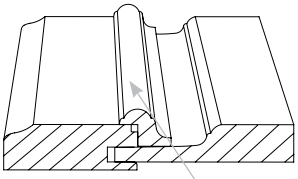

Applied moulding

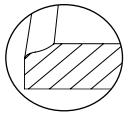

Outside profile is Z2

NOTES/CAUTIONS

1. 5-piece header only available on drawer headers 5 7/16" tall and greater. Drawer headers less than 6½" in height will be a flat panel.
2. Door and drawer hardware required.
3. Mullion doors will not have applied moulding.
4. The grain on the drawer header center panel runs horizontally.
5. See Allentown for inset option.
6. Applied moulding may restrict door swing.

© Copyright StarMark Cabinetry FEBRUARY 2022

LAGUNA

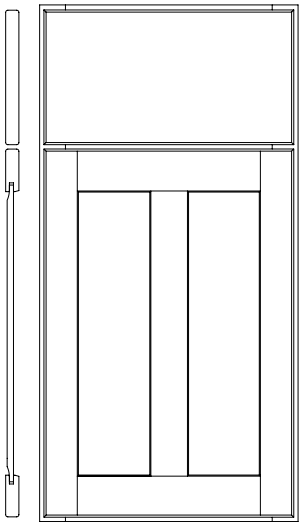

Standard slab drawer header

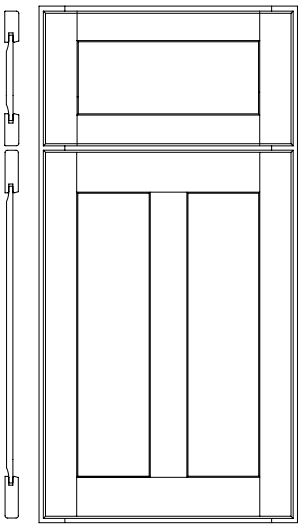

Optional 5-piece drawer header

Door Frame: ¾" thick square 2¼" stiles and rails
Door Center Panel: Solid ⅜" reverse flat panel, with a center divider on all cabinets 15" wide or wider, and on double door cabinets that are 30" wide or wider.
Drawer Header Center Panel: Solid ⅜" reverse flat panel on 5-piece drawer header
Drawer Header Stile Width: 2¼"
Drawer Header Rail Width: 1½"

Species	Alder	Cherry	Hickory	Maple	Oak	Rustic Alder
Price Column	9	9	7	9	6	9
Overlay	Modern					
Outside Profile	L					
Hinge	Concealed					
Options	**Is it available?**					
5-Piece Header	Yes $93 per drawer header					page S-33
Profiled Header	No					
Regent Profile	No					
Optional Edge	Yes A, Deco, F, H, M, Z2					page S-34
Furniture Pegs	Yes					page S-35
Finger Routes	No					
Bevel Pulls	No					
Insert Doors	Yes			Block 9500		
Mullion Doors	Yes			Block 9530		
Thornton Insert Door	Yes			Block 9520		
Veg Storage Drawer	Yes			Block 9820		
Curved Doors	No					
Wall Cabinets	Yes					
Base Cabinets	Yes					
Tall Cabinets	Yes					
Vanity Cabinets	Yes					

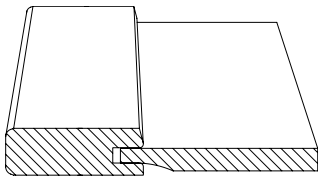

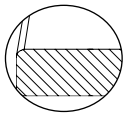

Outside profile is L

NOTES/CAUTIONS

1. 5-piece header only available on drawer headers 5 7/16" tall and greater.
2. Door and drawer hardware required.
3. Glaze may not be as noticeable on this door style.
4. The grain on the drawer header center panel runs horizontally.
5. See Lancaster for veneer panel option.

© Copyright StarMark Cabinetry FEBRUARY 2022

LANCASTER

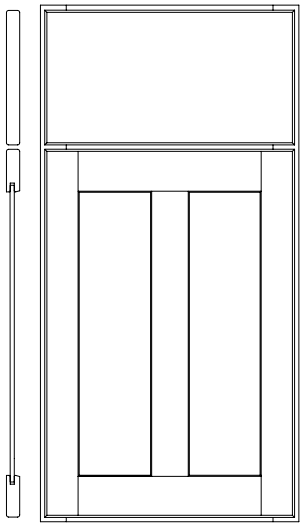

Standard slab drawer header

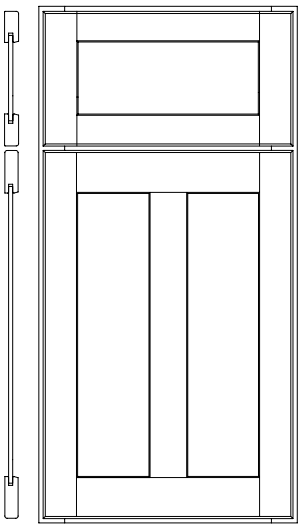

Optional 5-piece drawer header

Door Frame: ¾" thick square 2¼" stiles and rails
Center Panel: ¼" veneer center panel and a center divider on all cabinets 15" wide or wider, and on double door cabinets that are 30" wide or wider.
Drawer Header Center Panel: ¼" veneer on 5-piece drawer header
Drawer Header Stile Width: 2¼"
Drawer Header Rail Width: 1½"

Species	Alder	Cherry	Hickory	Maple	Oak	Rustic Alder
Price Column	6	6	6	6	5	6
Overlay	Modern					
Outside Profile	L					
Hinge	Concealed					
Options	**Is it available?**					
5-Piece Header	Yes $93 per drawer header					page S-33
Profiled Header	No					
Regent Profile	No					
Optional Edge	Yes A, Deco, F, H, M, Z2					page S-34
Furniture Pegs	Yes					page S-35
Finger Routes	No					
Bevel Pulls	No					
Insert Doors	Yes					Block 9500
Mullion Doors	Yes					Block 9530
Thornton Insert Door	Yes					Block 9520
Veg Storage Drawer	Yes					Block 9820
Curved Doors	No					
Wall Cabinets	Yes					
Base Cabinets	Yes					
Tall Cabinets	Yes					
Vanity Cabinets	Yes					

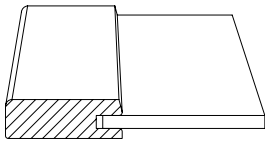

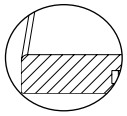

Outside profile is L

NOTES/CAUTIONS

1. 5-piece header only available on drawer headers 5 7/16" tall and greater.
2. Door and drawer hardware required.
3. Veneer center panel may have color variation from solid wood frame.
4. Glaze may not be as noticeable on this door style.
5. See Laguna for solid panel option.
6. The grain on the drawer header center panel runs vertically.

© Copyright StarMark Cabinetry FEBRUARY 2022

LEHIGH

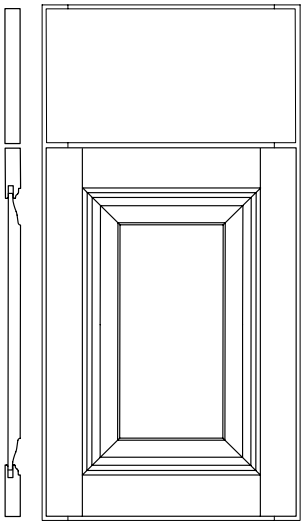

Standard slab drawer header

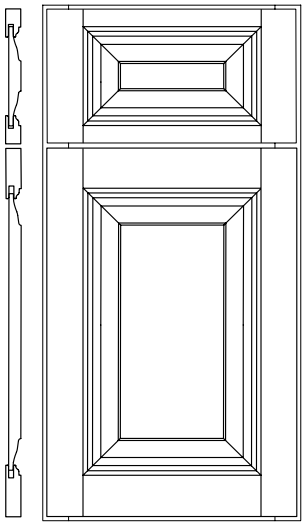

Optional 5-piece drawer header

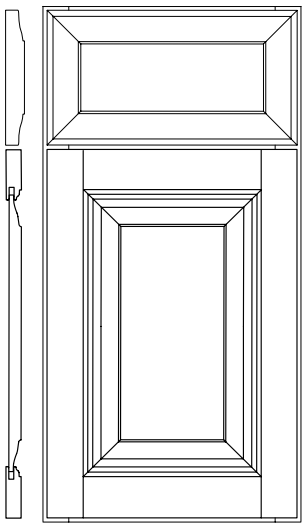

Optional profiled drawer header

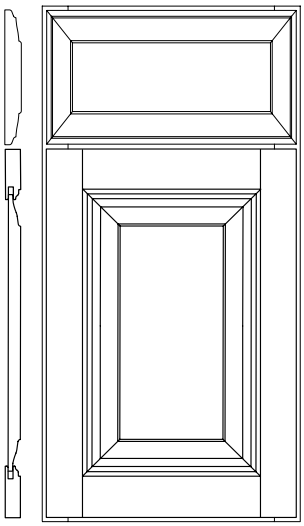

Optional Regent drawer profile

Door Frame: ¾" thick square 2¼" stiles and rails
Door Center Panel: Solid ⅝" raised panel
Drawer Header Center Panel: Solid ⅝" raised panel on 5-piece drawer header
Drawer Header Stile Width: 2¼"
Drawer Header Rail Width: 1½"

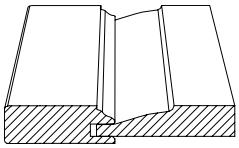

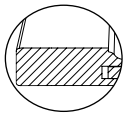

Outside profile is L

Species	Alder	Cherry	Hickory	Maple	Oak
Price Column	6	6	5	6	5
Species	Rustic Alder				
Price Column	6				
Overlay	Modern				
Outside Profile	L				
Hinge	Concealed				
Options	**Is it available?**				
5-Piece Header	Yes	$93 per drawer header		page S-33	
Profiled Header	Yes	$33 per drawer header		page S-36	
Regent Profile	Yes	$27 per drawer header		page S-36	
Optional Edge	Yes	A, Deco, F, H, M, Z2		page S-34	
Furniture Pegs	Yes			page S-35	
Finger Routes	No				
Bevel Pulls	No				
Insert Doors	Yes			Block 9500	
Mullion Doors	Yes			Block 9530	
Thornton Insert Door	Yes			Block 9520	
Veg Storage Drawer	Yes			Block 9820	
Curved Doors	Yes				
Wall Cabinets	Yes				
Base Cabinets	Yes				
Tall Cabinets	Yes				
Vanity Cabinets	Yes				

NOTES/CAUTIONS

1. 5-piece header only available on drawer headers 5 7/16" tall and greater.
2. Glaze may not be as noticeable on this door style.
3. Door and drawer hardware required.
4. The grain on the drawer header center panel runs horizontally.
5. See Laforest for inset option.

© Copyright StarMark Cabinetry FEBRUARY 2022

Customer Service: 800-550-2934 Technical: 800-551-3404

MANHATTAN

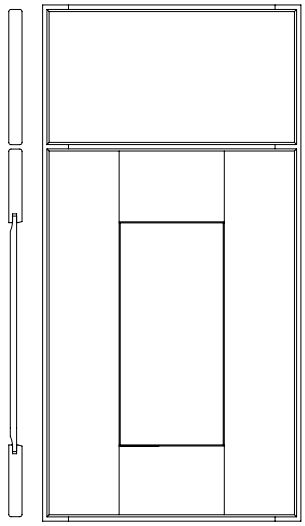

Standard slab drawer header

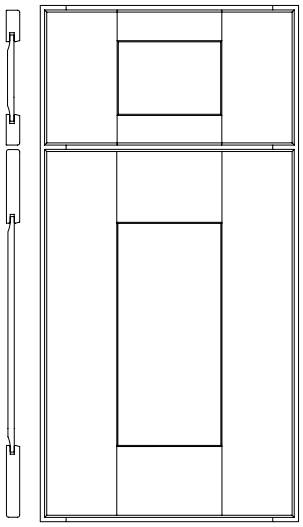

Optional 5-piece drawer header

Door Frame: ¾" thick square 3⅜" stiles and rails
Door Center Panel: Solid ⅜" reverse flat panel
Drawer Header Center Panel: Solid ⅜" reverse flat panel on 5-piece drawer header
Drawer Header Stile Width: 3⅜"
Drawer Header Rail Width: 1½"

Species	Alder	Cherry	Hickory	Maple	
Price Column	7	7	6	7	
Species	Oak	Rustic Alder		Walnut	
Price Column	5	7		7 (+25%)	
Overlay	Modern				
Outside Profile	L				
Hinge	Concealed				
Options	**Is it available?**				
5-Piece Header	Yes $93 per drawer header				page S-33
Profiled Header	No				
Regent Profile	No				
Optional Edge	Yes A, Deco, F, H, M, Z2				page S-34
Furniture Pegs	Yes				page S-35
Finger Routes	No				
Bevel Pulls	No				
Insert Doors	Yes			Block 9500	
Mullion Doors	Yes			Block 9530	
Thornton Insert Door	Yes			Block 9520	
Veg Storage Drawer	Yes			Block 9820	
Curved Doors	No				
Wall Cabinets	Yes				
Base Cabinets	Yes				
Tall Cabinets	Yes				
Vanity Cabinets	Yes				

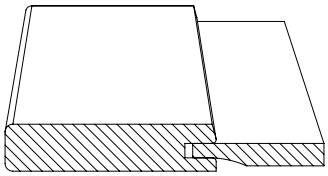

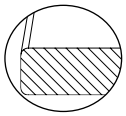

Outside profile is L

NOTES/CAUTIONS

1. 5-piece header only available on drawer headers 5 7/16" tall and greater.
2. Glaze may not be as noticeable on this door style.
3. Door and drawer hardware required.
4. Doors on these cabinets have 2¼" stiles: SCW21_, LSB33, SBC33FS, SLSB33, B09, TB09, BFP09, BPTY09, W09_, ASCW2124, ASCW2421, ASBC_FS, SSSW33, ASSSW, SBC33.
5. If you modify a cabinet, note that doors narrower than 9½" will have 2¼" stiles.
6. The grain on the drawer header center panel runs horizontally.
7. See Milan for veneer panel option.
8. See Mackay for inset option.

Full Access for Modern door styles

A cabinet that is 24" to 42" wide can be manufactured without the face frame center mullion. To order, prefix the cabinet nomenclature with a **2.** Styling will be butt doors. This is a no-charge option.

© Copyright StarMark Cabinetry FEBRUARY 2022

MEDINA

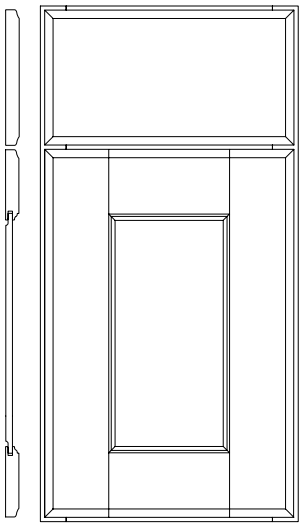

Standard slab drawer header

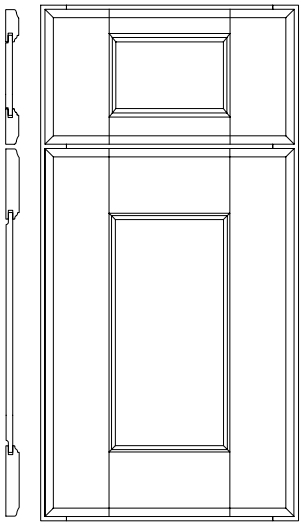

Optional 5-piece drawer header

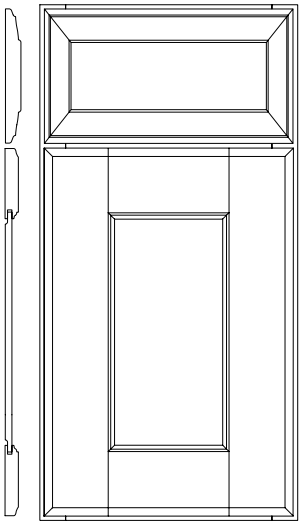

Optional Regent drawer profile

Door Frame: ¾" thick square 3⅜" stiles and rails
Door Center Panel: Solid ⅜" reverse flat panel
Drawer Header Center Panel: Solid ⅜" reverse flat panel on 5-piece drawer header
Drawer Header Stile Width: 3⅜"
Drawer Header Rail Width: 1½"

Species	Alder	Cherry	Hickory	Maple	
Price Column	6	7	6	7	
Species	Oak	Rustic Alder		Walnut	
Price Column	5	6		7 (+25%)	
Overlay	Modern				
Outside Profile	Z2				
Hinge	Concealed				
Options	**Is it available?**				
5-Piece Header	Yes $93 per drawer header				page S-33
Profiled Header	No				
Regent Profile	Yes $27 per drawer header				page S-36
Optional Edge	Yes A, Deco, F, H, L, M				page S-34
Furniture Pegs	Yes				page S-35
Finger Routes	No				
Bevel Pulls	No				
Insert Doors	Yes			Block 9500	
Mullion Doors	Yes			Block 9530	
Thornton Insert Door	Yes			Block 9520	
Veg Storage Drawer	Yes			Block 9820	
Curved Doors	No				
Wall Cabinets	Yes				
Base Cabinets	Yes				
Tall Cabinets	Yes				
Vanity Cabinets	Yes				

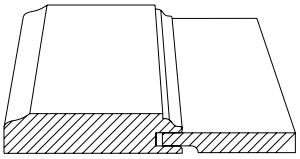

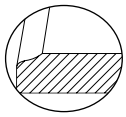

Outside profile is Z2

NOTES/CAUTIONS

1. 5-piece header only available on drawer headers 5 7/16" tall and greater.
2. Door and drawer hardware required.
3. Doors on these cabinets have 2¼" stiles: SCW21__, LSB33, SBC33FS, SLSB33, B09, TB09, BFP09, BPTY09, W09__, ASCW2124, ASCW2421, ASBC__FS, SSSW33, ASSSW, SBC33.
4. If you modify a cabinet, note that doors narrower than 9½" will have 2¼" stiles.
5. The grain on the drawer header center panel runs horizontally.
6. See Knottingham for inset option.

© Copyright StarMark Cabinetry FEBRUARY 2022

MELBOURNE

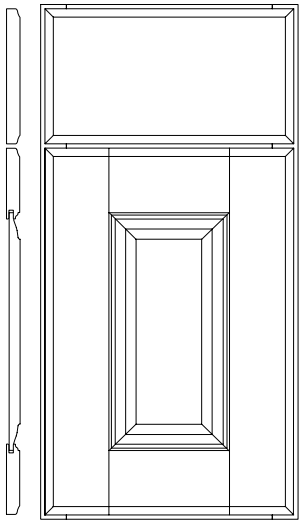

Standard slab drawer header

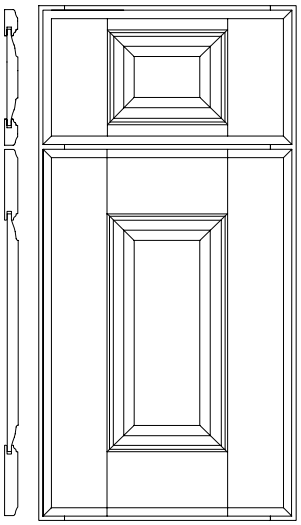

Optional 5-piece drawer header

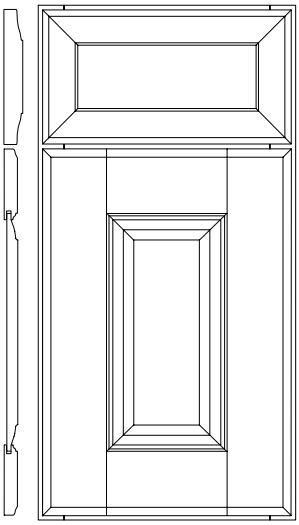

Optional profiled drawer header

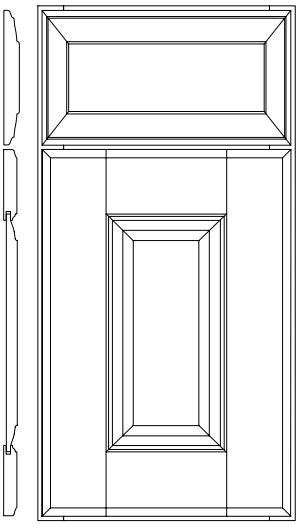

Optional Regent drawer profile

Door Frame: ¾" thick square 3⅜" stiles and rails
Door Center Panel: Solid ⅝" raised panel
Drawer Header Center Panel: Solid ⅝" raised panel on 5-piece drawer header
Drawer Header Stile Width: 3⅜"
Drawer Header Rail Width: 1½"

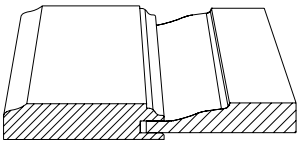

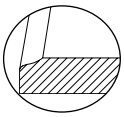

Outside profile is Z2

Species	Alder	Cherry	Hickory	Maple	
Price Column	6	7	6	7	
Species	Oak	Rustic Alder		Walnut	
Price Column	5	6		7 (+25%)	
Overlay	Modern				
Outside Profile	Z2				
Hinge	Concealed				
Options	**Is it available?**				
5-Piece Header	Yes $93 per drawer header			page S-33	
Profiled Header	Yes $33 per drawer header			page S-36	
Regent Profile	Yes $27 per drawer header			page S-36	
Optional Edge	Yes A, Deco, F, H, L, M			page S-34	
Furniture Pegs	Yes			page S-35	
Finger Routes	No				
Bevel Pulls	No				
Insert Doors	Yes			Block 9500	
Mullion Doors	Yes			Block 9530	
Thornton Insert Door	Yes			Block 9520	
Veg Storage Drawer	Yes			Block 9820	
Curved Doors	No				
Wall Cabinets	Yes				
Base Cabinets	Yes				
Tall Cabinets	Yes				
Vanity Cabinets	Yes				

NOTES/CAUTIONS

1. 5-piece header only available on drawer headers 5⁷⁄₁₆" tall and greater.
2. Door and drawer hardware required.
3. Doors on these cabinets will have 2¼" stiles to allow for raised panel: SCW24__, SBC36, LSB36, SBC36FS, SSS36, SSSW36, SSSCW36, SBC36RSS, ASCW2124, ASCW2421, ASBC__FS, SSSW33, ASSSW, SBC33, SCW21__, LSB33, SBC33FS, SLSB33, B09, TB09, BFP09, BPTY09, W09__, VSD24__, 2VSD33__, 2VSD36__, 2VSD39__, 2VCC45__, TVSD24__, 2TVSD33__, 2TVSD36__, 2TVSD39__, 2TVCC45__.
4. If you modify a cabinet, note that doors between 7¾" wide and 11⁷⁄₁₆" wide will have 2¼" stiles to allow for raised panel. Doors narrower than 7¾" will have a ⅜" reverse flat panel and 2¼" stiles.
5. ⅝" solid raised panel on 5-piece drawer header 6½" tall and greater.
6. The grain on the drawer header center panel runs horizontally.

Full Access for Modern door styles

A cabinet that is 24" to 42" wide can be manufactured without the face frame center mullion. To order, prefix the cabinet nomenclature with a **2.** Styling will be butt doors. This is a no-charge option.

© Copyright StarMark Cabinetry FEBRUARY 2022

MILAN

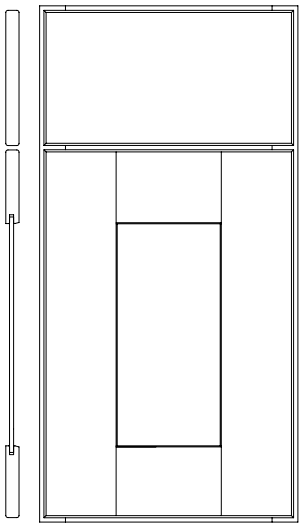

Standard slab drawer header

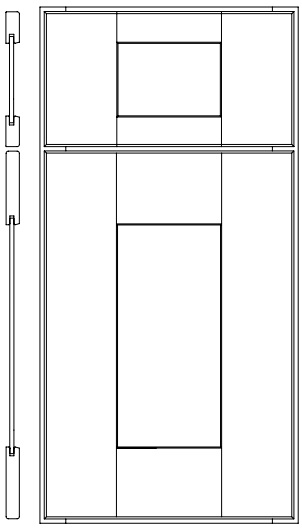

Optional 5-piece drawer header

Door Frame: ¾" thick square 3⅜" stiles and rails
Door Center Panel: ¼" veneer
Drawer Header Center Panel: ¼" veneer on 5-piece drawer header
Drawer Header Stile Width: 3⅜"
Drawer Header Rail Width: 1½"

Species	Alder	Cherry	Hickory	Maple	
Price Column	5	6	5	5	
Species	Oak	Rustic Alder		Walnut	
Price Column	4	5		6 (+25%)	
Overlay	Modern				
Outside Profile	L				
Hinge	Concealed				
Options	**Is it available?**				
5-Piece Header	Yes $93 per drawer header				page S-33
Profiled Header	No				
Regent Profile	No				
Optional Edge	Yes A, Deco, F, H, M, Z2				page S-34
Furniture Pegs	Yes				page S-35
Finger Routes	No				
Bevel Pulls	No				
Insert Doors	Yes				Block 9500
Mullion Doors	Yes				Block 9530
Thornton Insert Door	Yes				Block 9520
Veg Storage Drawer	Yes				Block 9820
Curved Doors	No				
Wall Cabinets	Yes				
Base Cabinets	Yes				
Tall Cabinets	Yes				
Vanity Cabinets	Yes				

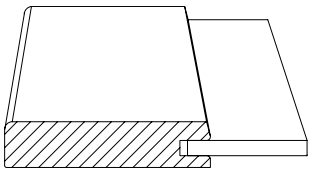

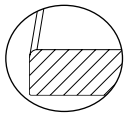

Outside profile is L

NOTES/CAUTIONS

1. 5-piece header only available on drawer headers 5⁷⁄₁₆" tall and greater.
2. Glaze may not be as noticeable on this door style.
3. Door and drawer hardware required.
4. Veneer center panel may have color variation from solid wood frame.
5. Doors on these cabinets have 2¼" stiles: SCW21_, LSB33, SBC33FS, SLSB33, B09, TB09, BFP09, BPTY09, W09_, ASCW2124, ASCW2421, ASBC_FS, SSSW33, ASSSW, SBC33.
6. If you modify a cabinet, note that doors narrower than 9½" will have 2¼" stiles.
7. See Manhattan for solid panel option.
8. The grain on the drawer header center panel runs horizontally.

© Copyright StarMark Cabinetry FEBRUARY 2022

MONROE

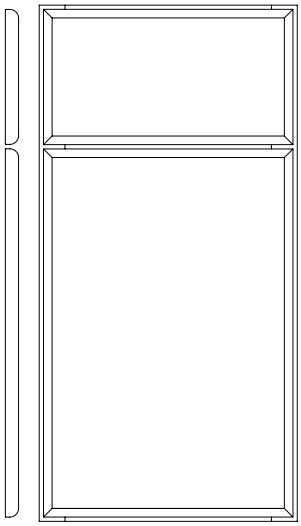

Standard slab drawer header

Material: Door and drawer header are ¾" solid wood

Species	Alder	Cherry	Hickory	Maple	Oak
Price Column	6	6	3	6	2
Overlay	Modern				
Outside Profile	M				
Hinge	Concealed				

Options	**Is it available?**	
5-Piece Header	No	
Profiled Header	No	
Regent Profile	No	
Optional Edge	Yes A, Deco, F, H, L, Z2	page S-34
Furniture Pegs	No	
Finger Routes	No	
Bevel Pulls	No	
Insert Doors	Yes Built with Bridgeport style door	Block 9500
Mullion Doors	Yes Built with Bridgeport style door	Block 9530
Thornton Insert Door	No	
Veg Storage Drawer	Yes Built with Lancaster style header	Block 9820
Curved Doors	Yes	
Wall Cabinets	Yes	
Base Cabinets	Yes	
Tall Cabinets	Yes	
Vanity Cabinets	Yes	

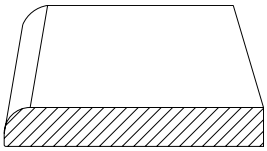

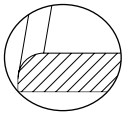

Outside profile is M

NOTES/CAUTIONS

1. **CAUTION:** Door may expand in humid climates. See Policies & Procedures: Climate Considerations.
2. Door and drawer hardware required.
3. Glaze hang-up may not be noticeable on this door style, but the glaze will change the tone of the stain.
4. On Tip Up and Bifold Door cabinets greater than 24" in width, Monroe doors have horizontal grain.

Full Access for Modern door styles

A cabinet that is 24" to 42" wide can be manufactured without the face frame center mullion. To order, prefix the cabinet nomenclature with a **2.** Styling will be butt doors. This is a no-charge option.

© Copyright StarMark Cabinetry FEBRUARY 2022

OAKLEY

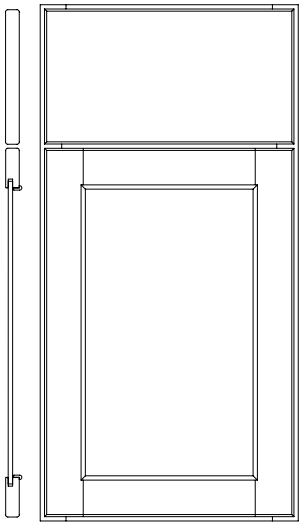

Standard slab drawer header

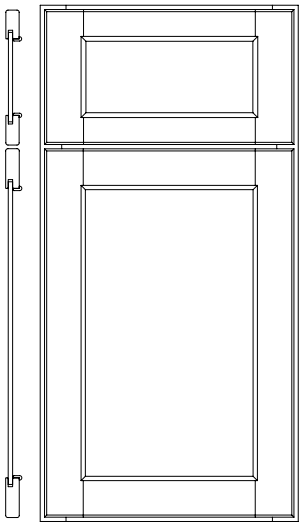

Optional 5-piece drawer header

Door Frame: ¾" thick square 2¼" stiles and rails
Door Center Panel: ¼" veneer center panel trimmed with moulding
Drawer Header Center Panel: ¼" veneer center panel trimmed with moulding on 5-piece drawer header
Drawer Header Stile Width: 2¼"
Drawer Header Rail Width: 1½"

Species	Alder	Cherry	Hickory	
Price Column	7	7	6	
Species	Maple	Oak		
Price Column	6	4		
Overlay	Modern			
Outside Profile	L			
Hinge	Concealed			
Options	**Is it available?**			
5-Piece Header	Yes $93 per drawer header			page S-33
Profiled Header	No			
Regent Profile	No			
Optional Edge	Yes A, Deco, F, H, M, Z2			page S-34
Furniture Pegs	Yes			page S-35
Finger Routes	No			
Bevel Pulls	No			
Insert Doors	Yes		Block 9500	
Mullion Doors	Yes		Block 9530	
Thornton Insert Door	Yes		Block 9520	
Veg Storage Drawer	Yes		Block 9820	
	Built with Lancaster style header			
Curved Doors	No			
Wall Cabinets	Yes			
Base Cabinets	Yes			
Tall Cabinets	Yes			
Vanity Cabinets	Yes			

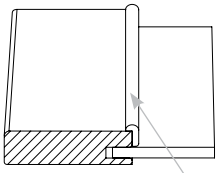

Applied moulding

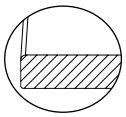

Outside profile is L

NOTES/CAUTIONS

1. 5-piece header only available on drawer headers 5 7/16" tall and greater.
2. Door and drawer hardware required.
3. The grain on the drawer header center panel runs horizontally.
4. Mullion doors will not have applied moulding.
5. See Orian for solid panel option.

© Copyright StarMark Cabinetry FEBRUARY 2022

ORIAN

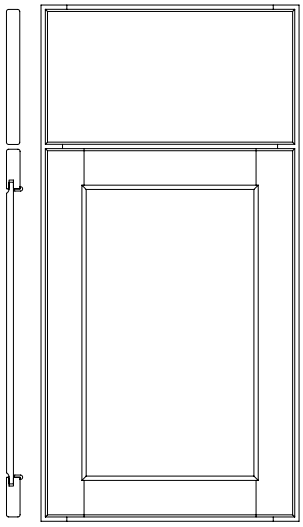

Standard slab drawer header

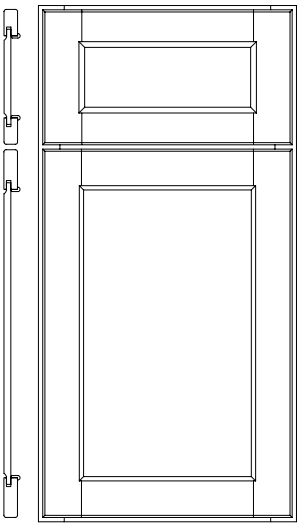

Optional 5-piece drawer header

Door Frame: ¾" thick square 2¼" stiles and rails
Door Center Panel: Solid ⅜" reverse flat panel trimmed with moulding
Drawer Header Center Panel: Solid ⅜" reverse flat panel trimmed with moulding on 5-piece drawer header
Drawer Header Stile Width: 2¼"
Drawer Header Rail Width: 1½"

Species	Alder	Cherry	Hickory	
Price Column	10	10	9	
Species	Maple	Oak		
Price Column	9	8		
Overlay	Modern			
Outside Profile	L			
Hinge	Concealed			
Options	**Is it available?**			
5-Piece Header	Yes $93 per drawer header			page S-33
Profiled Header	No			
Regent Profile	No			
Optional Edge	Yes A, Deco, F, H, M, Z2			page S-34
Furniture Pegs	Yes			page S-35
Finger Routes	No			
Bevel Pulls	No			
Insert Doors	Yes		Block 9500	
Mullion Doors	Yes		Block 9530	
Thornton Insert Door	Yes		Block 9520	
Veg Storage Drawer	Yes		Block 9820	
	Built with Lancaster style header			
Curved Doors	No			
Wall Cabinets	Yes			
Base Cabinets	Yes			
Tall Cabinets	Yes			
Vanity Cabinets	Yes			

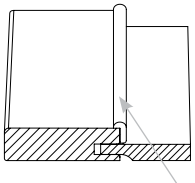

Applied moulding

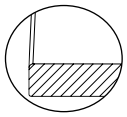

Outside profile is L

NOTES/CAUTIONS

1. 5-piece header only available on drawer headers 5 7/16" tall and greater.
2. Door and drawer hardware required.
3. The grain on the drawer header center panel runs horizontally.
4. Mullion doors will not have applied moulding.
5. See Oakley for veneer panel option.
6. See Amsdahl for inset option.

© Copyright StarMark Cabinetry FEBRUARY 2022

OSPREY

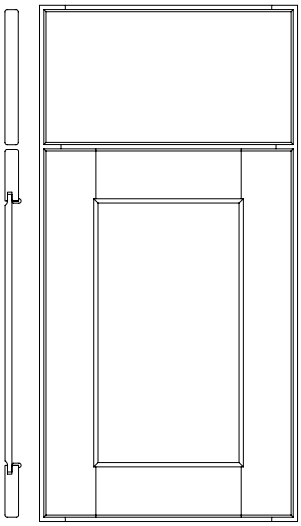

Standard slab drawer header

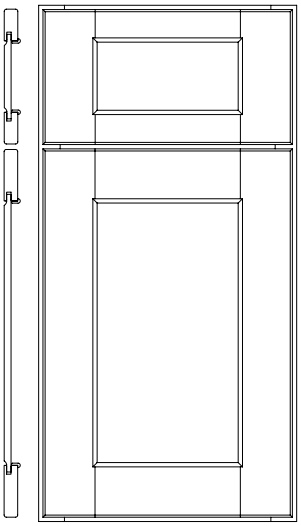

Optional 5-piece drawer header

Door Frame: ¾" thick square 2¾" stiles and rails
Door Center Panel: Solid ⅜" reverse flat panel trimmed with moulding
Drawer Header Center Panel: Solid ⅜" reverse flat panel trimmed with moulding on 5-piece drawer header
Drawer Header Stile Width: 2¾"
Drawer Header Rail Width: 1½"

Species	Alder	Cherry	Hickory	Maple	Oak
Price Column	10	10	9	10	9
Species	Rustic Alder				
Price Column	10				
Overlay	Modern				
Outside Profile	L				
Hinge	Concealed				
Options	**Is it available?**				
5-Piece Header	Yes $93 per drawer header page S-33				
Profiled Header	No				
Regent Profile	No				
Optional Edge	Yes A, Deco, F, H, M, Z2 page S-34				
Furniture Pegs	Yes page S-35				
Finger Routes	No				
Bevel Pulls	No				
Insert Doors	Yes Block 9500				
Mullion Doors	Yes Block 9530				
Thornton Insert Door	Yes Block 9520				
Veg Storage Drawer	Yes Block 9820 Built with Lancaster style header				
Curved Doors	No				
Wall Cabinets	Yes				
Base Cabinets	Yes				
Tall Cabinets	Yes				
Vanity Cabinets	Yes				

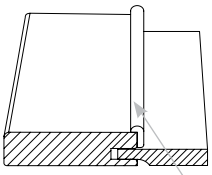

Applied moulding

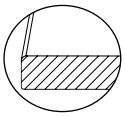

Outside profile is L

NOTES/CAUTIONS

1. 5-piece header only available on drawer headers 5⁷⁄₁₆" tall and greater.
2. Door and drawer hardware required.
3. The grain on the drawer header center panel runs horizontally.
4. Mullion doors will not have applied moulding.
5. See Overland for veneer panel option.

© Copyright StarMark Cabinetry FEBRUARY 2022

OVERLAND

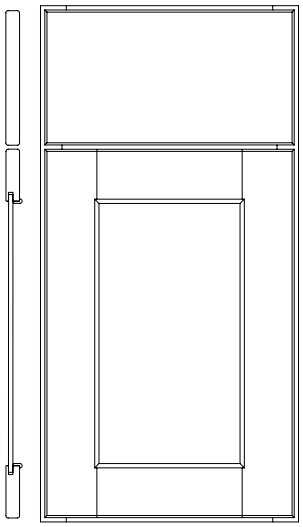

Standard slab drawer header

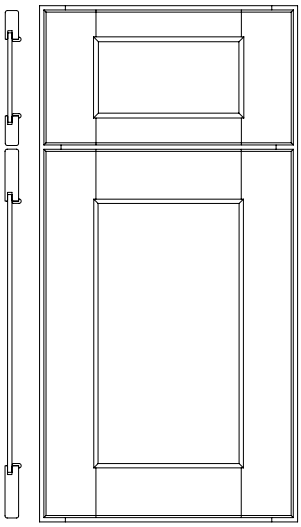

Optional 5-piece drawer header

Door Frame: ¾" thick square 2¾" stiles and rails
Door Center Panel: ¼" veneer center panel trimmed with moulding
Drawer Header Center Panel: ¼" veneer center panel trimmed with moulding on 5-piece drawer header
Drawer Header Stile Width: 2¾"
Drawer Header Rail Width: 1½"

Species	Alder	Cherry	Hickory	Maple	Oak
Price Column	8	8	6	8	6
Species	Rustic Alder				
Price Column	8				
Overlay	Modern				
Outside Profile	L				
Hinge	Concealed				
Options	**Is it available?**				
5-Piece Header	Yes $93 per drawer header page S-33				
Profiled Header	No				
Regent Profile	No				
Optional Edge	Yes A, Deco, F, H, M, Z2 page S-34				
Furniture Pegs	Yes page S-35				
Finger Routes	No				
Bevel Pulls	No				
Insert Doors	Yes Block 9500				
Mullion Doors	Yes Block 9530				
Thornton Insert Door	Yes Block 9520				
Veg Storage Drawer	Yes Block 9820 Built with Lancaster style header				
Curved Doors	No				
Wall Cabinets	Yes				
Base Cabinets	Yes				
Tall Cabinets	Yes				
Vanity Cabinets	Yes				

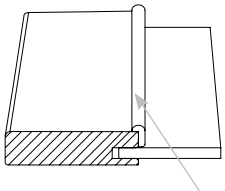

Applied moulding

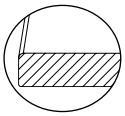

Outside profile is L

NOTES/CAUTIONS

1. 5-piece header only available on drawer headers 5 7/16" tall and greater.
2. Door and drawer hardware required.
3. The grain on the drawer header center panel runs horizontally.
4. Mullion doors will not have applied moulding.
5. See Osprey for solid panel option.

© Copyright StarMark Cabinetry FEBRUARY 2022

PEABODY

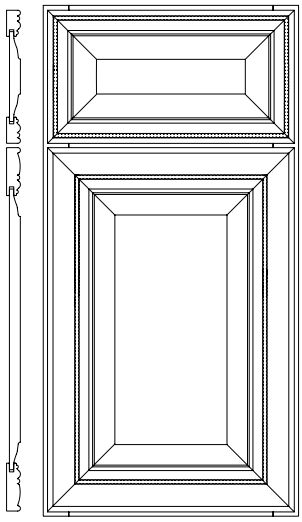

Standard 5-piece drawer header

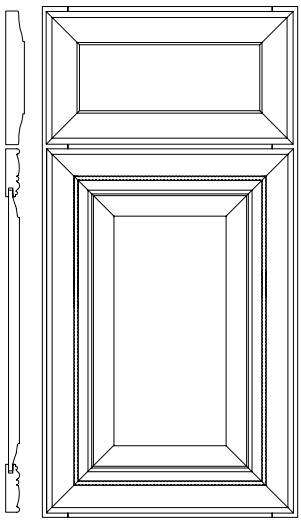

Optional profiled drawer header

Door Frame: ¾" thick mitered 2¾" stiles and rails
Door Center Panel: Solid ⅝" raised panel
Drawer Header Center Panel: Solid ⅝" raised panel
Drawer Header Stile and Rail Width: 1½"

Species	Alder	Cherry	Maple	Rustic Alder
Price Column	10	10	10	10
Overlay	Modern			
Outside Profile	Unique			
Hinge	Concealed			
Options	**Is it available?**			
5-Piece Header	Standard			
Profiled Header	Yes $33 per drawer header page S-36			
Regent Profile	No			
Optional Edge	No			
Furniture Pegs	No			
Finger Routes	No			
Bevel Pulls	No			
Insert Doors	Yes		Block 9500	
Mullion Doors	Yes		Block 9530	
Thornton Insert Door	No			
Veg Storage Drawer	Yes Built with Lancaster style header		Block 9820	
Curved Doors	No			
Wall Cabinets	Yes			
Base Cabinets	Yes			
Tall Cabinets	Yes			
Vanity Cabinets	Yes			

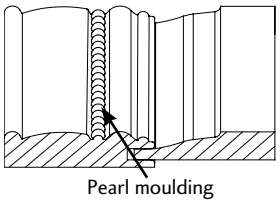

Pearl moulding

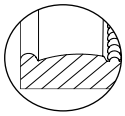

Outside profile is Unique

NOTES/CAUTIONS

1. 5-piece header only available on drawer headers 5 7/16" tall and greater. Drawer headers less than 6½" in height will be a flat panel.
2. Doors on cabinets ASCW2124, ASCW2421, ASBC__FS, SSSW33, ASSSW, SBC33, SCW21, SBC33FS, LSB33 and SLSB33 will be flat panel.
3. Door and drawer hardware required.
4. Mullion doors will only accept ⅛" thick glass. Glass clips will not be routed into door frame.
5. The grain on the drawer header center panel runs horizontally.

© Copyright StarMark Cabinetry FEBRUARY 2022

PRESCOTT

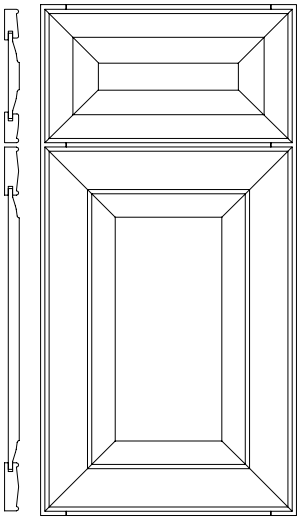

Standard 5-piece drawer header

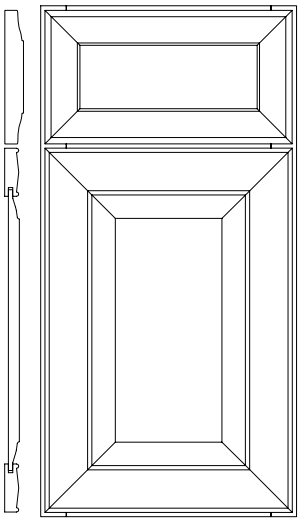

Optional profiled drawer header

Door Frame: ¾" thick mitered 2¾" stiles and rails
Door Center Panel: Solid ⅝" raised panel
Drawer Header Center Panel: Solid ⅝" raised panel
Drawer Header Stile and Rail Width: 1¾"

Species	Cherry	Hickory	Maple	
Price Column	7	6	7	
Overlay	Modern			
Outside Profile	Unique			
Hinge	Concealed			
Options	**Is it available?**			
5-Piece Header	Standard			
Profiled Header	Yes $33 per drawer header page S-36			
Regent Profile	No			
Optional Edge	No			
Furniture Pegs	No			
Finger Routes	No			
Bevel Pulls	No			
Insert Doors	Yes			Block 9500
Mullion Doors	Yes			Block 9530
Thornton Insert Door	No			
Veg Storage Drawer	Yes Built with Lancaster style header			Block 9820
Curved Doors	No			
Wall Cabinets	Yes			
Base Cabinets	Yes			
Tall Cabinets	Yes			
Vanity Cabinets	Yes			

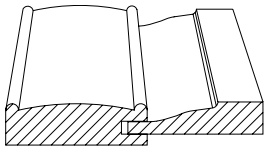

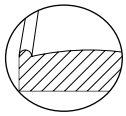

Outside profile is Unique

NOTES/CAUTIONS

1. 5-piece header only available on drawer headers 5 7/16" tall and greater. Drawer headers less than 6½" in height will be a flat panel.
2. Door and drawer hardware required.
3. Doors on cabinets ASCW2124, ASCW2421, ASBC__FS, SSSW33, ASSSW, SBC33, SCW21, SBC33FS, LSB33 and SLSB33 will be flat panel.
4. The grain on the drawer header center panel runs horizontally.

Full Access for Modern door styles

A cabinet that is 24" to 42" wide can be manufactured without the face frame center mullion. To order, prefix the cabinet nomenclature with a **2.** Styling will be butt doors. This is a no-charge option.

© Copyright StarMark Cabinetry FEBRUARY 2022

PRINCETON

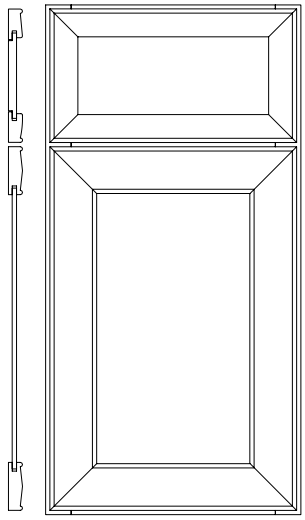

Standard 5-piece drawer header

Door Frame: ¾″ thick mitered 2¾″ stiles and rails
Door Center Panel: ¼″ veneer
Drawer Header Center Panel: ¼″ veneer
Drawer Header Stile and Rail Width: 1¾″

Species	Cherry	Hickory	Maple	
Price Column	7	6	6	
Overlay	Modern			
Outside Profile	Unique			
Hinge	Concealed			
Options	**Is it available?**			
5-Piece Header	Standard			
Profiled Header	No			
Regent Profile	No			
Optional Edge	No			
Furniture Pegs	No			
Finger Routes	No			
Bevel Pulls	No			
Insert Doors	Yes			Block 9500
Mullion Doors	Yes			Block 9530
Thornton Insert Door	No			
Veg Storage Drawer	Yes Built with Lancaster style header			Block 9820
Curved Doors	No			
Wall Cabinets	Yes			
Base Cabinets	Yes			
Tall Cabinets	Yes			
Vanity Cabinets	Yes			

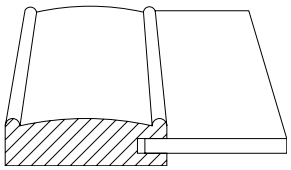

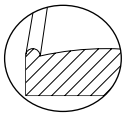

Outside profile is Unique

NOTES/CAUTIONS

1. 5-piece header only available on drawer headers 5 7/16” tall and greater.
2. Door and drawer hardware required.
3. Veneer center panel may have color variation from solid wood frame.
4. The grain on the drawer header center panel runs vertically.

© Copyright StarMark Cabinetry FEBRUARY 2022

REDCLIFF

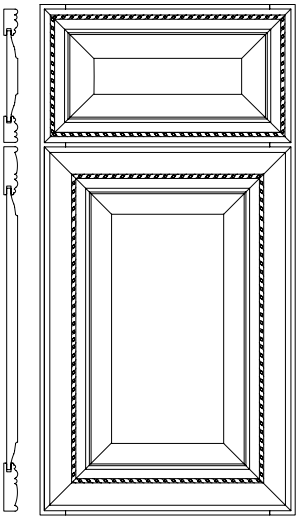

Standard 5-piece drawer header

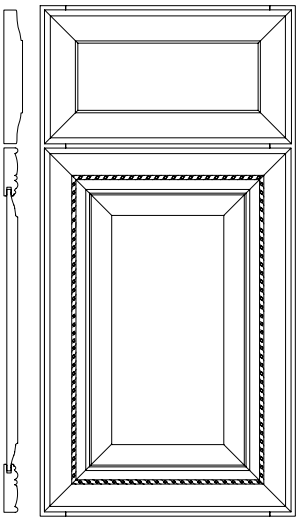

Optional profiled drawer header

Door Frame: ¾" thick mitered 2¾" stiles and rails
Door Center Panel: Solid ⅝" raised panel
Drawer Header Center Panel: Solid ⅝" raised panel
Drawer Header Stile and Rail Width: 1½"

Species	Alder	Cherry	Maple	Rustic Alder
Price Column	10	10	10	10
Overlay	Modern			
Outside Profile	Unique			
Hinge	Concealed			
Options	**Is it available?**			
5-Piece Header	Standard			
Profiled Header	Yes $33 per drawer header page S-36			
Regent Profile	No			
Optional Edge	No			
Furniture Pegs	No			
Finger Routes	No			
Bevel Pulls	No			
Insert Doors	Yes		Block 9500	
Mullion Doors	Yes		Block 9530	
Thornton Insert Door	No			
Veg Storage Drawer	Yes		Block 9820	
	Built with Lancaster style header			
Curved Doors	No			
Wall Cabinets	Yes			
Base Cabinets	Yes			
Tall Cabinets	Yes			
Vanity Cabinets	Yes			

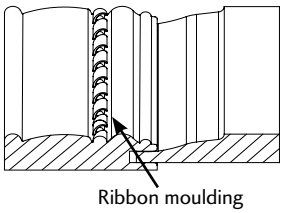

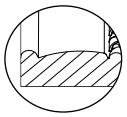

Outside profile is Unique

NOTES/CAUTIONS

1. 5-piece header only available on drawer headers 5 7/16" tall and greater. Drawer headers less than 6½" in height will be a flat panel.
2. Doors on cabinets ASCW2124, ASCW2421, ASBC__FS, SSSW33, ASSSW, SBC33, SCW21, SBC33FS, LSB33 and SLSB33 will be flat panel.
3. Door and drawer hardware required.
4. Mullion doors will only accept ⅛" thick glass. Glass clips will not be routed into door frame.
5. The grain on the drawer header center panel runs horizontally.

Full Access for Modern door styles

A cabinet that is 24" to 42" wide can be manufactured without the face frame center mullion. To order, prefix the cabinet nomenclature with a **2.** Styling will be butt doors. This is a no-charge option.

© Copyright StarMark Cabinetry FEBRUARY 2022

REGAL

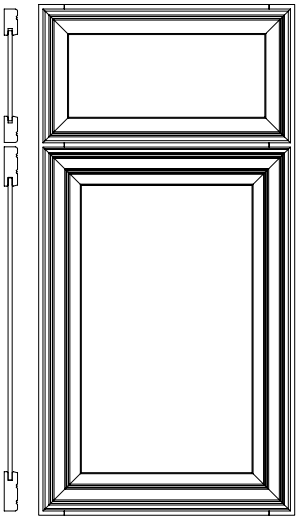

Standard 5-piece drawer header

Door Frame: ¾" thick mitered 2¼" stiles and rails
Door and Drawer Header Center Panel: ¼" veneer
Drawer Header Stile and Rail Width: 1½"

Species	Cherry	Hickory	Maple	Oak
Price Column	5	3	4	3
Overlay	Modern			
Outside Profile	L			
Hinge	Concealed			
Options	**Is it available?**			
5-Piece Header	Standard			
Profiled Header	No			
Regent Profile	No			
Optional Edge	No			
Furniture Pegs	No			
Finger Routes	No			
Bevel Pulls	No			
Insert Doors	Yes		Block 9500	
Mullion Doors	Yes		Block 9530	
Thornton Insert Door	No			
Veg Storage Drawer	Yes Built with Lancaster style header		Block 9820	
Curved Doors	No			
Wall Cabinets	Yes			
Base Cabinets	Yes			
Tall Cabinets	Yes			
Vanity Cabinets	Yes			

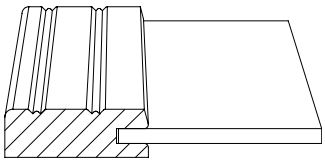

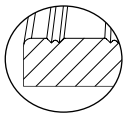

Outside profile is L

NOTES/CAUTIONS

1. 5-piece header only available on drawer headers 5⁷⁄₁₆" tall and greater.
2. Door and drawer hardware required.
3. Veneer center panel may have color variation from solid wood frame.
4. The grain on the drawer header center panel runs horizontally.

© Copyright StarMark Cabinetry FEBRUARY 2022

REMINGTON NEW!

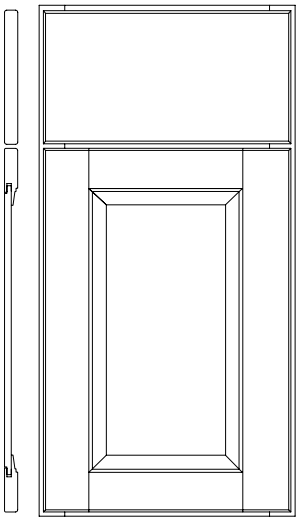

Standard slab drawer header

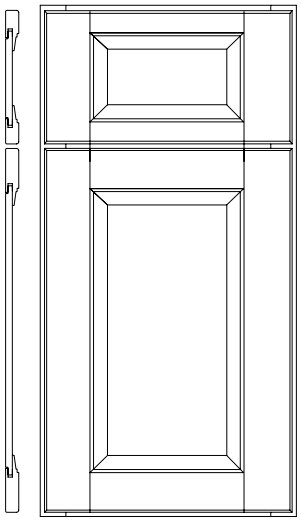

Optional 5-piece drawer header

Door Frame: ¾" thick square 3¼" stiles and rails
Door Center Panel: Solid ⅜" reverse flat panel
Drawer Header Center Panel: Solid ⅜" reverse flat panel on 5-piece drawer header
Drawer Header Stile Width: 3¼"
Drawer Header Rail Width: 1⅞"

Species	Alder	Cherry	Hickory	Maple	Oak
Price Column	10	10	9	10	9
Species	Rustic Alder		Qtr. Sawn Oak		
Price Column	10		10		
Overlay	Modern				
Outside Profile	L				
Hinge	Concealed				
Options	**Is it available?**				
5-Piece Header	Yes $93 per drawer header page S-33				
Profiled Header	No				
Regent Profile	No				
Optional Edge	Yes A, Deco, F, H, M, Z2 page S-34				
Furniture Pegs	Yes page S-35				
Finger Routes	No				
Bevel Pulls	No				
Insert Doors	Yes Block 9500				
Mullion Doors	Yes Block 9530				
Thornton Insert Door	Yes Block 9520				
Veg Storage Drawer	Yes Block 9820 Built with Lancaster style header				
Curved Doors	No				
Wall Cabinets	Yes				
Base Cabinets	Yes				
Tall Cabinets	Yes				
Vanity Cabinets	Yes				

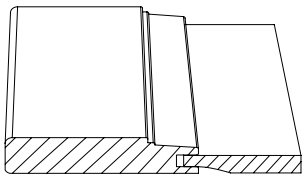

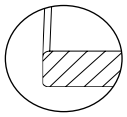

Outside profile is L

NOTES/CAUTIONS

1. 5-piece header only available on drawer headers 5⁷⁄₁₆" tall and greater.
2. Door and drawer hardware required.
3. The grain on the drawer header center panel runs horizontally.
4. See Rutland for inset option.

Full Access for Modern door styles

A cabinet that is 24" to 42" wide can be manufactured without the face frame center mullion. To order, prefix the cabinet nomenclature with a **2.** Styling will be butt doors. This is a no-charge option.

© Copyright StarMark Cabinetry FEBRUARY 2022

RENWICK

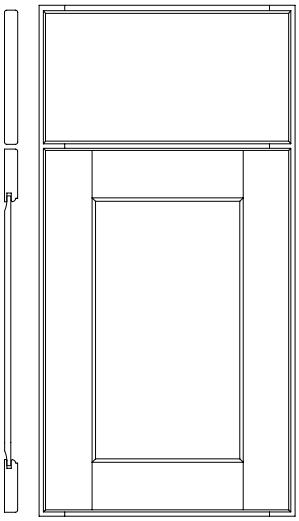

Standard slab drawer header

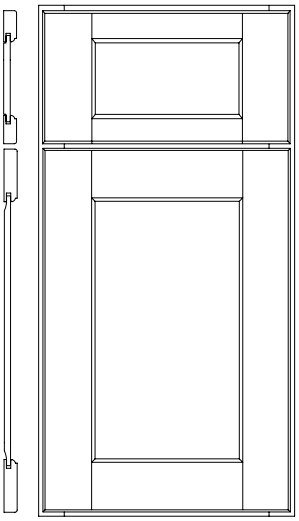

Optional 5-piece drawer header

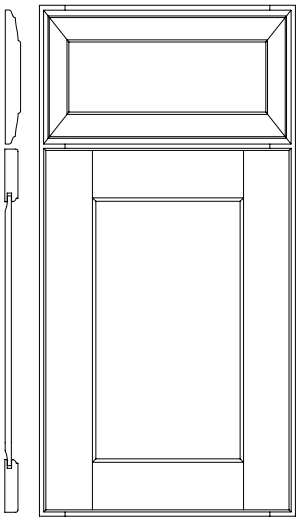

Optional Regent drawer profile

Door Frame: ¾" thick square 2¾" stiles and rails
Door Center Panel: Solid ⅜" reverse flat panel
Drawer Header Center Panel: Solid ⅜" reverse flat panel on 5-piece drawer header
Drawer Header Stile Width: 2¾"
Drawer Header Rail Width: 1½"

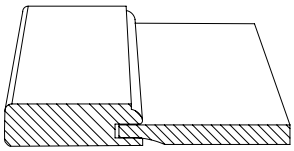

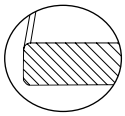

Outside profile is L

Species	Alder	Cherry	Hickory	Maple	Oak
Price Column	7	7	6	7	5
Species	Rustic Alder				
Price Column	7				
Overlay	Modern				
Outside Profile	L				
Hinge	Concealed				

Options	**Is it available?**	
5-Piece Header	Yes $93 per drawer header	page S-33
Profiled Header	No	
Regent Profile	Yes $27 per drawer header	page S-36
Optional Edge	Yes A, Deco, F, H, M, Z2	page S-34
Furniture Pegs	Yes	page S-35
Finger Routes	No	
Bevel Pulls	No	
Insert Doors	Yes Block 9500	
Mullion Doors	Yes Block 9530	
Thornton Insert Door	Yes Block 9520	
Veg Storage Drawer	Yes Block 9820	
Curved Doors	No	
Wall Cabinets	Yes	
Base Cabinets	Yes	
Tall Cabinets	Yes	
Vanity Cabinets	Yes	

NOTES/CAUTIONS

1. 5-piece header only available on drawer headers 5 7/16" tall and greater.
2. Door and drawer hardware required.
3. The grain on the drawer header center panel runs horizontally.
4. See Richland for veneer panel option.

© Copyright StarMark Cabinetry FEBRUARY 2022

RICHLAND

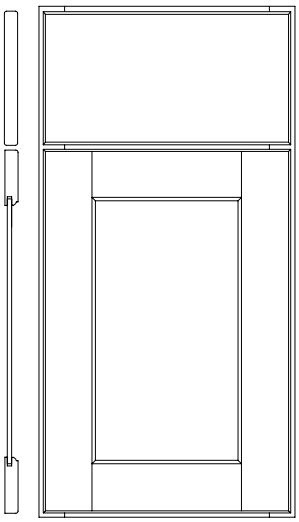

Standard slab drawer header

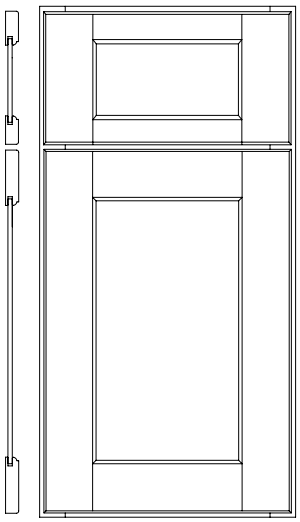

Optional 5-piece drawer header

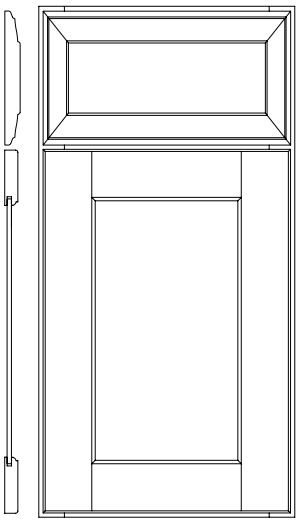

Optional Regent drawer profile

Door Frame: ¾" thick square 2¾" stiles and rails
Door Center Panel: ¼" veneer
Drawer Header Center Panel: ¼" veneer on 5-piece drawer header
Drawer Header Stile Width: 2¾"
Drawer Header Rail Width: 1½"

Species	Alder	Cherry	Hickory	Maple	Oak
Price Column	5	5	4	5	3
Species	Rustic Alder				
Price Column	5				
Overlay	Modern				
Outside Profile	L				
Hinge	Concealed				
Options	**Is it available?**				
5-Piece Header	Yes $93 per drawer header				page S-33
Profiled Header	No				
Regent Profile	Yes $27 per drawer header				page S-36
Optional Edge	Yes A, Deco, F, H, M, Z2				page S-34
Furniture Pegs	Yes				page S-35
Finger Routes	No				
Bevel Pulls	No				
Insert Doors	Yes		Block 9500		
Mullion Doors	Yes		Block 9530		
Thornton Insert Door	Yes		Block 9520		
Veg Storage Drawer	Yes		Block 9820		
Curved Doors	No				
Wall Cabinets	Yes				
Base Cabinets	Yes				
Tall Cabinets	Yes				
Vanity Cabinets	Yes				

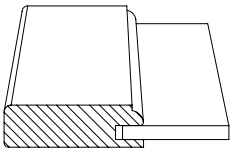

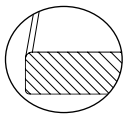

Outside profile is L

NOTES/CAUTIONS

1. 5-piece header only available on drawer headers 5 7/16" tall and greater.
2. Door and drawer hardware required.
3. Veneer center panel may have color variation from solid wood frame.
4. The grain on the drawer header center panel runs horizontally.
5. See Renwick for solid panel option.

© Copyright StarMark Cabinetry FEBRUARY 2022

RIDGEVILLE

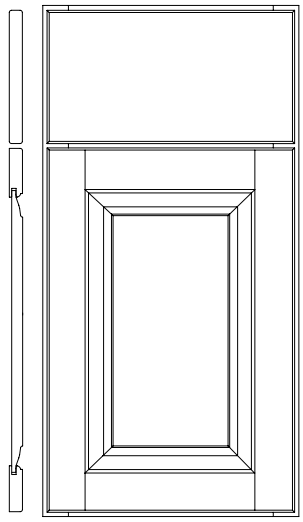

Standard slab drawer header

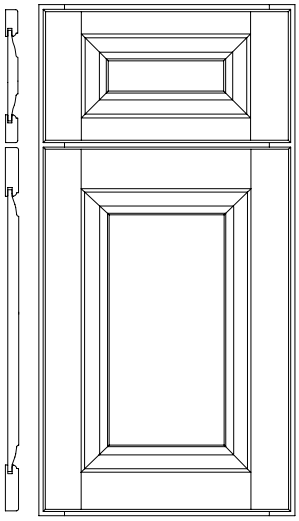

Optional 5-piece drawer header

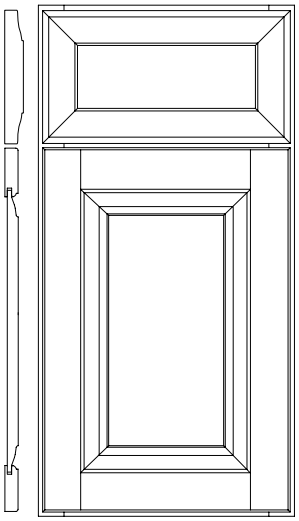

Optional profiled drawer header

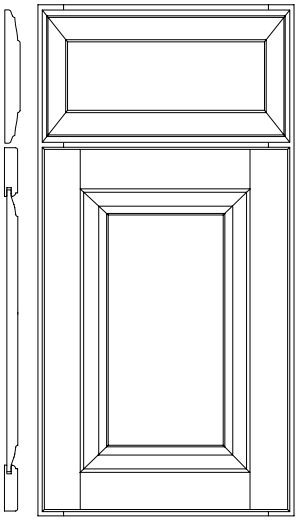

Optional Regent drawer profile

Door Frame: ¾" thick square 2¼" stiles and rails
Door Center Panel: Solid ⅝" raised panel
Drawer Header Center Panel: Solid ⅝" raised panel on 5-piece drawer header
Drawer Header Stile Width: 2¼"
Drawer Header Rail Width: 1½"

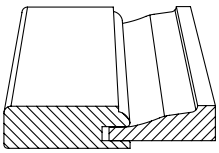

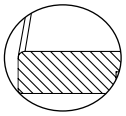

Outside profile is L

Species	Alder	Cherry	Hickory	Maple	Oak	Rustic Alder
Price Column	6	6	5	5	5	6
Species	Walnut					
Price Column	6 (+25%)					
Overlay	Modern					
Outside Profile	L					
Hinge	Concealed					
Options	**Is it available?**					
5-Piece Header	Yes $93 per drawer header					page S-33
Profiled Header	Yes $33 per drawer header					page S-36
Regent Profile	Yes $27 per drawer header					page S-36
Optional Edge	Yes A, Deco, F, H, M, Z2					page S-34
Furniture Pegs	Yes					page S-35
Finger Routes	No					
Bevel Pulls	No					
Insert Doors	Yes			Block 9500		
Mullion Doors	Yes			Block 9530		
Thornton Insert Door	Yes			Block 9520		
Veg Storage Drawer	Yes			Block 9820		
Curved Doors	No					
Wall Cabinets	Yes					
Base Cabinets	Yes					
Tall Cabinets	Yes					
Vanity Cabinets	Yes					

NOTES/CAUTIONS

1. 5-piece header only available on drawer headers 5⁷⁄₁₆" tall and greater.
2. ⅝" solid raised panel on 5-piece drawer header 6½" tall and greater.
3. Door and drawer hardware required.
4. The grain on the drawer header center panel runs horizontally.
5. See Rock Elm for inset option.

Full Access for Modern door styles

A cabinet that is 24" to 42" wide can be manufactured without the face frame center mullion. To order, prefix the cabinet nomenclature with a **2.** Styling will be butt doors. This is a no-charge option.

© Copyright StarMark Cabinetry FEBRUARY 2022

ROANOKE

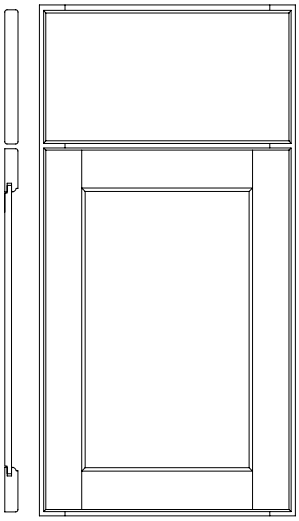

Standard slab drawer header

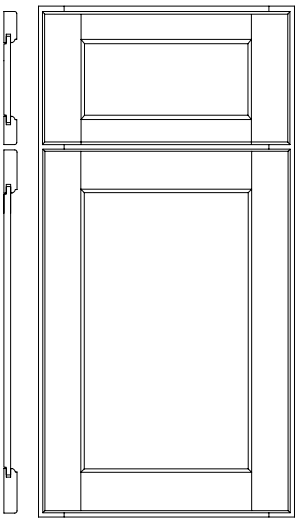

Optional 5-piece drawer header

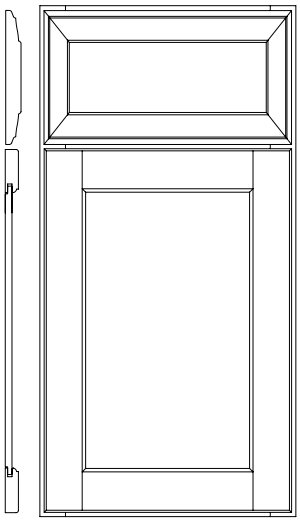

Optional Regent drawer profile

Door Frame: ¾" thick square 2¼" stiles and rails
Door Center Panel: Solid ⅜" reverse flat panel
Drawer Header Center Panel: Solid ⅜" reverse flat panel on 5-piece drawer header
Drawer Header Stile Width: 2¼"
Drawer Header Rail Width: 1½"

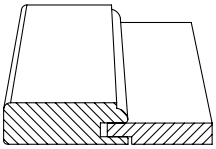

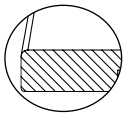

Outside profile is L

Species	Alder	Cherry	Hickory	Maple	Oak	Rustic Alder
Price Column	6	6	5	5	5	6
Species	Walnut					
Price Column	6 (+25%)					
Overlay	Modern					
Outside Profile	L					
Hinge	Concealed					
Options	**Is it available?**					
5-Piece Header	Yes $93 per drawer header					page S-33
Profiled Header	No					
Regent Profile	Yes $27 per drawer header					page S-36
Optional Edge	Yes A, Deco, F, H, M, Z2					page S-34
Furniture Pegs	Yes					page S-35
Finger Routes	No					
Bevel Pulls	No					
Insert Doors	Yes			Block 9500		
Mullion Doors	Yes			Block 9530		
Thornton Insert Door	Yes			Block 9520		
Veg Storage Drawer	Yes			Block 9820		
Curved Doors	No					
Wall Cabinets	Yes					
Base Cabinets	Yes					
Tall Cabinets	Yes					
Vanity Cabinets	Yes					

NOTES/CAUTIONS

1. 5-piece header only available on drawer headers 5 7/16" tall and greater.
2. Door and drawer hardware required.
3. The grain on the drawer header center panel runs horizontally.
4. See Roseville for veneer panel option.
5. See Rocheport for inset option.

© Copyright StarMark Cabinetry FEBRUARY 2022

ROMAN

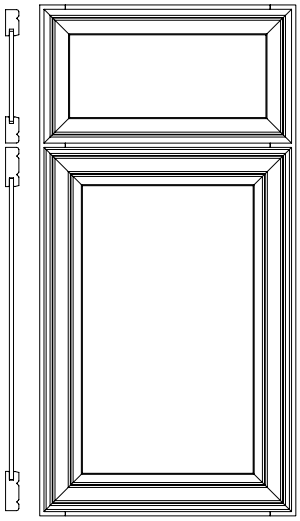

Standard 5-piece drawer header

Door Frame: ¾" thick mitered 2¼" stiles and rails
Door and Drawer Header Center Panel: ¼" veneer
Drawer Header Stile and Rail Width: 1½"

Species	Cherry	Hickory	Maple	Oak
Price Column	5	3	4	3
Overlay	Modern			
Outside Profile	L			
Hinge	Concealed			
Options	**Is it available?**			
5-Piece Header	Standard			
Profiled Header	No			
Regent Profile	No			
Optional Edge	No			
Furniture Pegs	No			
Finger Routes	No			
Bevel Pulls	No			
Insert Doors	Yes		Block 9500	
Mullion Doors	Yes		Block 9530	
Thornton Insert Door	No			
Veg Storage Drawer	Yes Built with Lancaster style header		Block 9820	
Curved Doors	No			
Wall Cabinets	Yes			
Base Cabinets	Yes			
Tall Cabinets	Yes			
Vanity Cabinets	Yes			

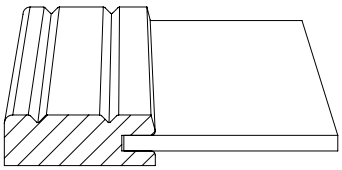

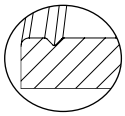

Outside profile is L

NOTES/CAUTIONS

1. 5-piece header only available on drawer headers 5 7/16" tall and greater.
2. Door and drawer hardware required.
3. Veneer center panel may have color variation from solid wood frame.
4. The grain on the drawer header center panel runs horizontally.

© Copyright StarMark Cabinetry FEBRUARY 2022

ROSEVILLE

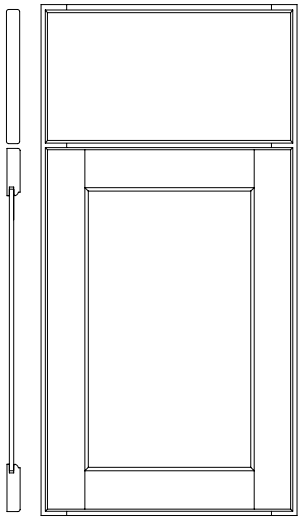

Standard slab drawer header

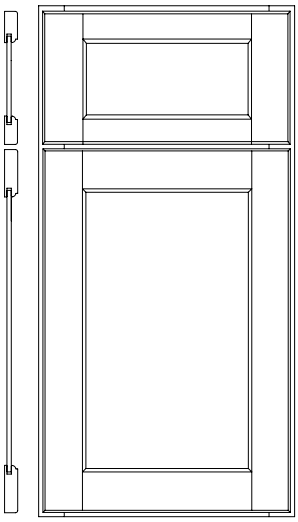

Optional 5-piece drawer header

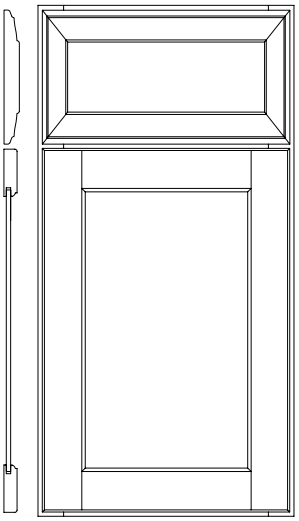

Optional Regent drawer profile

Door Frame: ¾" thick square 2¼" stiles and rails
Door Center Panel: ¼" veneer
Drawer Header Center Panel: ¼" veneer on 5-piece drawer header
Drawer Header Stile Width: 2¼"
Drawer Header Rail Width: 1½"

Species	Alder	Cherry	Hickory	Maple	Oak	Rustic Alder
Price Column	3	3	2	2	2	3
Species	Walnut					
Price Column	3 (+25%)					
Overlay	Modern					
Outside Profile	L					
Hinge	Concealed					
Options	**Is it available?**					
5-Piece Header	Yes $93 per drawer header					page S-33
Profiled Header	No					
Regent Profile	Yes $27 per drawer header					page S-36
Optional Edge	Yes A, Deco, F, H, M, Z2					page S-34
Furniture Pegs	Yes					page S-35
Finger Routes	No					
Bevel Pulls	No					
Insert Doors	Yes			Block 9500		
Mullion Doors	Yes			Block 9530		
Thornton Insert Door	Yes			Block 9520		
Veg Storage Drawer	Yes			Block 9820		
Curved Doors	No					
Wall Cabinets	Yes					
Base Cabinets	Yes					
Tall Cabinets	Yes					
Vanity Cabinets	Yes					

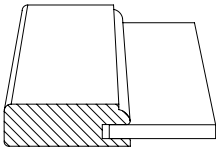

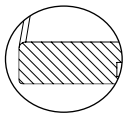

Outside profile is L

NOTES/CAUTIONS

1. 5-piece header only available on drawer headers 5 7/16" tall and greater.
2. Door and drawer hardware required.
3. Veneer center panel may have color variation from solid wood frame.
4. The grain on the drawer header center panel runs horizontally.
5. See Roanoke for solid panel option.

Full Access for Modern door styles

A cabinet that is 24" to 42" wide can be manufactured without the face frame center mullion. To order, prefix the cabinet nomenclature with a **2.** Styling will be butt doors. This is a no-charge option.

© Copyright StarMark Cabinetry FEBRUARY 2022

SAN DIMAS

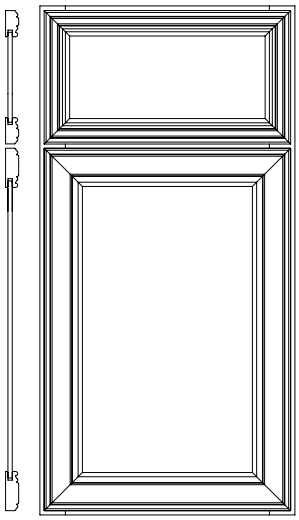

Standard 5-piece drawer header

Door Frame: ¾" thick mitered 2¼" stiles and rails
Door Center Panel: ¼" veneer
Drawer Header Center Panel: ¼" veneer
Drawer Header Stile and Rail Width: 1½"

Species	Cherry	Hickory	Maple	Oak
Price Column	6	5	6	5
Overlay	Modern			
Outside Profile	Unique			
Hinge	Concealed			
Options	**Is it available?**			
5-Piece Header	Standard			
Profiled Header	No			
Regent Profile	No			
Optional Edge	No			
Furniture Pegs	No			
Finger Routes	No			
Bevel Pulls	No			
Insert Doors	Yes		Block 9500	
Mullion Doors	Yes		Block 9530	
Thornton Insert Door	No		Block 9520	
Veg Storage Drawer	Yes Built with Lancaster style header		Block 9820	
Curved Doors	No			
Wall Cabinets	Yes			
Base Cabinets	Yes			
Tall Cabinets	Yes			
Vanity Cabinets	Yes			

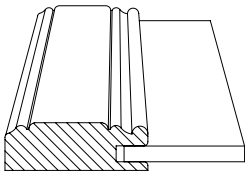

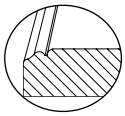

Outside profile is Unique

NOTES/CAUTIONS

1. 5-piece header only available on drawer headers 5 7/16" tall and greater.
2. Door and drawer hardware required.
3. Veneer center panel may have color variation from solid wood frame.
4. The grain on the drawer header center panel runs horizontally.

© Copyright StarMark Cabinetry FEBRUARY 2022

STOCKTON

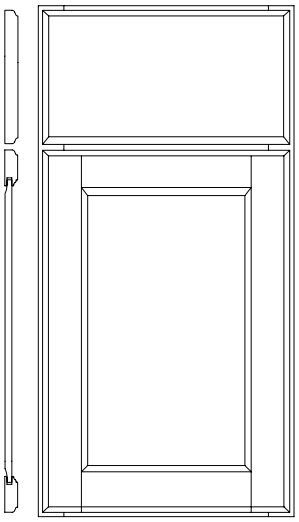

Standard slab drawer header

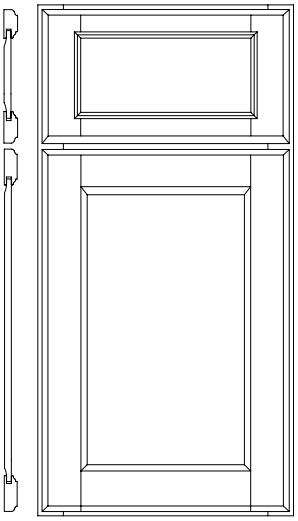

Optional 5-piece drawer header

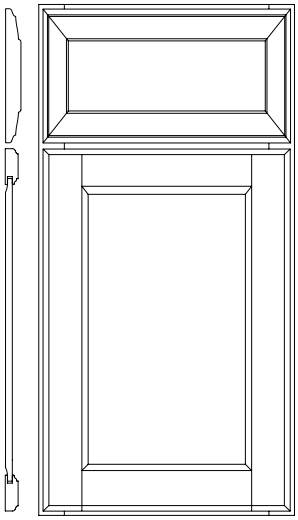

Optional Regent drawer profile

Door Frame: ¾" thick square 2¼" stiles and rails
Door Center Panel: Solid ⅜" reverse flat panel
Drawer Header Center Panel: Solid ⅜" reverse flat panel on 5-piece drawer header
Drawer Header Stile Width: 2¼"
Drawer Header Rail Width: 1½"

Species	Alder	Cherry	Hickory	Maple	
Price Column	7	7	6	7	
Species	Oak	Rustic Alder		Walnut	
Price Column	4	7		7 (+25%)	
Overlay	Modern				
Outside Profile	F				
Hinge	Concealed				
Options	**Is it available?**				
5-Piece Header	Yes	$93 per drawer header			page S-33
Profiled Header	No				
Regent Profile	Yes	$27 per drawer header			page S-36
Optional Edge	Yes	A, Deco, H, L, M, Z2			page S-34
Furniture Pegs	Yes				page S-35
Finger Routes	No				
Bevel Pulls	No				
Insert Doors	Yes			Block 9500	
Mullion Doors	Yes			Block 9530	
Thornton Insert Door	Yes			Block 9520	
Veg Storage Drawer	Yes			Block 9820	
Curved Doors	No				
Wall Cabinets	Yes				
Base Cabinets	Yes				
Tall Cabinets	Yes				
Vanity Cabinets	Yes				

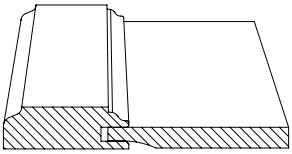

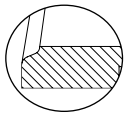

Outside profile is F

NOTES/CAUTIONS

1. 5-piece header only available on drawer headers 5 7/16" tall and greater.
2. Glaze may not be as noticeable on this door style.
3. Door and drawer hardware required.
4. The grain on the drawer header center panel runs horizontally.
5. See Stratford for veneer panel option.
6. See Lafontaine for inset option.

Full Access for Modern door styles

A cabinet that is 24" to 42" wide can be manufactured without the face frame center mullion. To order, prefix the cabinet nomenclature with a **2.** Styling will be butt doors. This is a no-charge option.

© Copyright StarMark Cabinetry FEBRUARY 2022

STRATFORD

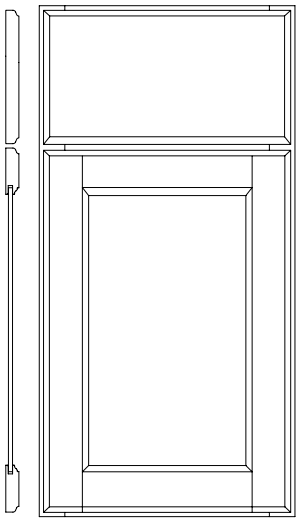

Standard slab drawer header

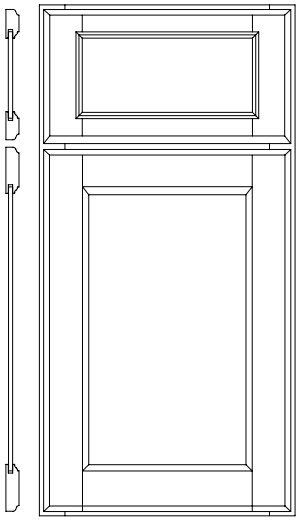

Optional 5-piece drawer header

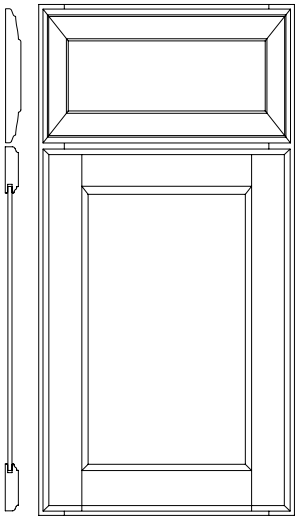

Optional Regent drawer profile

Door Frame: ¾″ thick square 2¼″ stiles and rails
Door Center Panel: ¼″ veneer
Drawer Header Center Panel: ¼″ veneer on 5-piece drawer header
Drawer Header Stile Width: 2¼″
Drawer Header Rail Width: 1½″

Species	Alder	Cherry	Hickory	Maple	
Price Column	3	3	1	2	
Species	Oak	Rustic Alder		Walnut	
Price Column	1	3		3 (+25%)	
Overlay	Modern				
Outside Profile	F				
Hinge	Concealed				
Options	**Is it available?**				
5-Piece Header	Yes $93 per drawer header				page S-33
Profiled Header	No				
Regent Profile	Yes $27 per drawer header				page S-36
Optional Edge	Yes A, Deco, H, L, M, Z2				page S-34
Furniture Pegs	Yes				page S-35
Finger Routes	No				
Bevel Pulls	No				
Insert Doors	Yes			Block 9500	
Mullion Doors	Yes			Block 9530	
Thornton Insert Door	Yes			Block 9520	
Veg Storage Drawer	Yes			Block 9820	
Curved Doors	No				
Wall Cabinets	Yes				
Base Cabinets	Yes				
Tall Cabinets	Yes				
Vanity Cabinets	Yes				

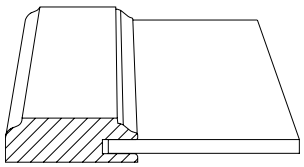

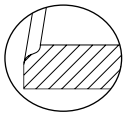

Outside profile is F

NOTES/CAUTIONS

1. 5-piece header only available on drawer headers 5 7/16″ tall and greater.
2. Glaze may not be as noticeable on this door style.
3. Door and drawer hardware required.
4. Veneer center panel may have color variation from solid wood frame.
5. See Stockton for solid panel option.
6. The grain on the drawer header center panel runs horizontally.
7. See Salem for traditional overlay option.

© Copyright StarMark Cabinetry FEBRUARY 2022

SUNDANCE

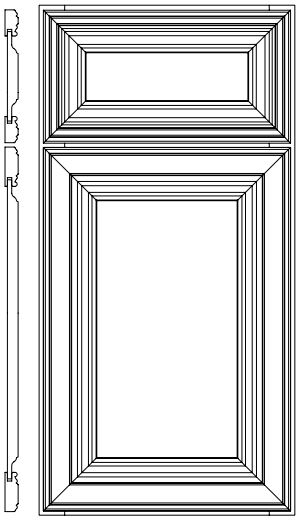

Standard 5-piece drawer header

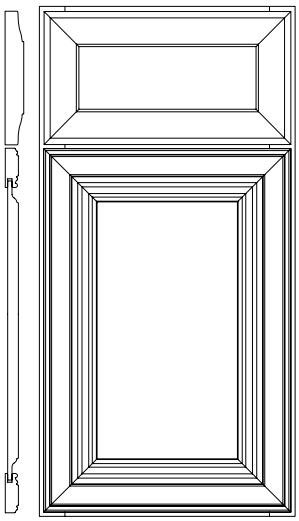

Optional profiled drawer header

Door Frame: ¾" thick mitered 2¼" stiles and rails
Door Center Panel: Solid ⅝" raised panel
Drawer Header Center Panel: Solid ⅝" raised panel
Drawer Header Stile and Rail Width: 1½"

Species	Cherry	Hickory	Maple	Oak
Price Column	9	8	9	8
Overlay	Modern			
Outside Profile	Unique			
Hinge	Concealed			
Options	**Is it available?**			
5-Piece Header	Standard			
Profiled Header	Yes $33 per drawer header page S-36			
Regent Profile	No			
Optional Edge	No			
Furniture Pegs	No			
Finger Routes	No			
Bevel Pulls	No			
Insert Doors	Yes		Block 9500	
Mullion Doors	Yes		Block 9530	
Thornton Insert Door	No			
Veg Storage Drawer	Yes Built with Lancaster style header		Block 9820	
Curved Doors	No			
Wall Cabinets	Yes			
Base Cabinets	Yes			
Tall Cabinets	Yes			
Vanity Cabinets	Yes			

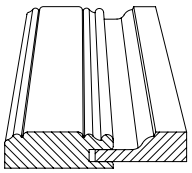

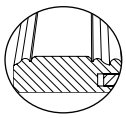

Outside profile is Unique

NOTES/CAUTIONS

1. 5-piece header only available on drawer headers 5 7/16" tall and greater.
2. Door and drawer hardware required.
3. The grain on the drawer header center panel runs horizontally.

Full Access for Modern door styles

A cabinet that is 24" to 42" wide can be manufactured without the face frame center mullion. To order, prefix the cabinet nomenclature with a **2.** Styling will be butt doors. This is a no-charge option.

© Copyright StarMark Cabinetry FEBRUARY 2022

SYRACUSE

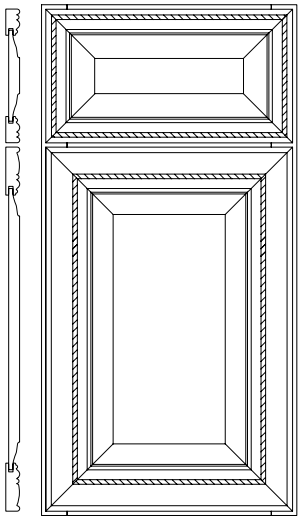

Standard 5-piece drawer header

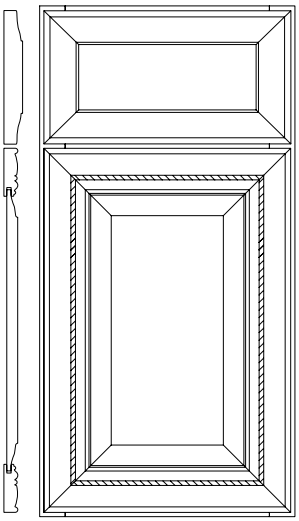

Optional profiled drawer header

Door Frame: ¾″ thick mitered 2¾″ stiles and rails
Door Center Panel: Solid ⅝″ raised panel
Drawer Header Center Panel: Solid ⅝″ raised panel
Drawer Header Stile and Rail Width: 1½″

Species	Alder	Cherry	Maple	Rustic Alder
Price Column	10	10	9	10
Overlay	Modern			
Outside Profile	Unique			
Hinge	Concealed			
Options	**Is it available?**			
5-Piece Header	Standard			
Profiled Header	Yes $33 per drawer header page S-36			
Regent Profile	No			
Optional Edge	No			
Furniture Pegs	No			
Finger Routes	No			
Bevel Pulls	No			
Insert Doors	Yes		Block 9500	
Mullion Doors	Yes		Block 9530	
Thornton Insert Door	No			
Veg Storage Drawer	Yes Built with Lancaster style header		Block 9820	
Curved Doors	No			
Wall Cabinets	Yes			
Base Cabinets	Yes			
Tall Cabinets	Yes			
Vanity Cabinets	Yes			

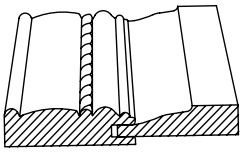

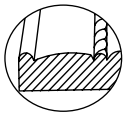

Outside profile is Unique

NOTES/CAUTIONS

1. 5-piece header only available on drawer headers 5 7/16″ tall and greater. Drawer headers less than 6½″ in height will be a flat panel.
2. Doors on cabinets ASCW2124, ASCW2421, ASBC__FS, SSSW33, ASSSW, SBC33, SCW21, SBC33FS, LSB33 and SLSB33 will be flat panel.
3. Door and drawer hardware required.
4. Mullion doors will only accept ⅛″ thick glass. Glass clips will not be routed into door frame.
5. The grain on the drawer header center panel runs horizontally.

© Copyright StarMark Cabinetry FEBRUARY 2022

TABOR

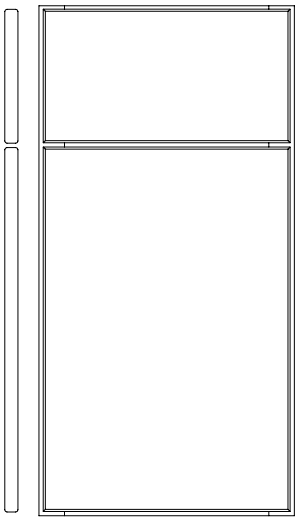

Standard slab drawer header

Material: Door and drawer header are .720" veneer with medium density fiberboard core and 3mm wood edging

Species	Cherry	Maple	
Price Column	6	6	
Overlay	Modern		
Outside Profile	L		
Hinge	Concealed		
Options	**Is it available?**		
5-Piece Header	No		
Profiled Header	No		
Regent Profile	No		
Optional Edge	No		
Furniture Pegs	No		
Finger Routes	No		
Bevel Pulls	No		
Insert Doors	Yes Built with Bridgeport style door		Block 9500
Mullion Doors	Yes Built with Bridgeport style door		Block 9530
Thornton Insert Door	No		
Veg Storage Drawer	Yes Built with Lancaster style header		Block 9820
Curved Doors	No		
Wall Cabinets	Yes		
Base Cabinets	Yes		
Tall Cabinets	Yes		
Vanity Cabinets	Yes		

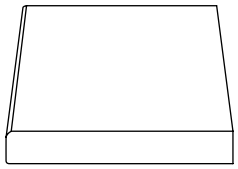

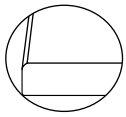

Outside profile is L

NOTES/CAUTIONS

1. Glaze hang-up may not be noticeable on this door style, but the glaze will change the tone of the stain.
2. Door and drawer hardware required.
3. The grain on the door runs vertically.
4. The grain on the drawer header runs horizontally.
5. The Tabor door is on a six week cycle ship.
6. The Tabor door style is available in Stain, Stain with Glaze, Tinted Varnish and Tinted Varnish with Glaze finishes only. Cottage Distressing, Old World Distressing and (distressed) Specialty Finishes are not available.
7. When the Tabor door is finished in Tinted Varnish, the door is constructed from 100% MDF.

Full Access for Modern door styles

A cabinet that is 24" to 42" wide can be manufactured without the face frame center mullion. To order, prefix the cabinet nomenclature with a **2.** Styling will be butt doors. This is a no-charge option.

© Copyright StarMark Cabinetry FEBRUARY 2022

TAMA

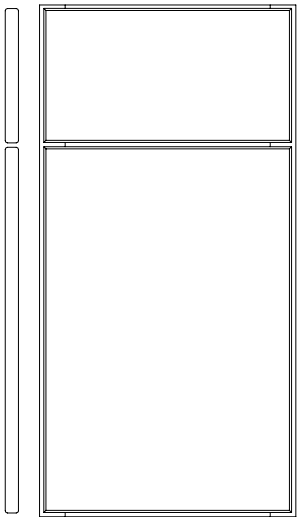

Standard slab drawer header

Material: Door and drawer header are .720" solid MDF

Species	MDF	
Price Column	2	
Overlay	Modern	
Outside Profile	L	
Hinge	Concealed	
Options	**Is it available?**	
5-Piece Header	No	
Profiled Header	No	
Regent Profile	No	
Optional Edge	No	
Furniture Pegs	No	
Finger Routes	No	
Bevel Pulls	No	
Insert Doors	Yes Built with Bridgeport door	Block 9500
Mullion Doors	Yes Built with Bridgeport door	Block 9530
Thornton Insert Door	No	
Veg Storage Drawer	Yes Built with Lancaster style header	Block 9820
Curved Doors	No	
Wall Cabinets	Yes	
Base Cabinets	Yes	
Tall Cabinets	Yes	
Vanity Cabinets	Yes	

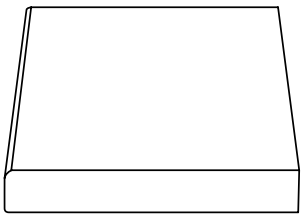

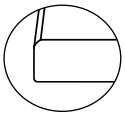

Outside profile is L

NOTES/CAUTIONS

1. Door and drawer hardware required.
2. The cabinet face frame is ¾" solid Maple
3. The Tama door style is only available in straight Tinted Varnish finishes (without glaze).
4. See Terra for inset option.

© Copyright StarMark Cabinetry FEBRUARY 2022

TAFT

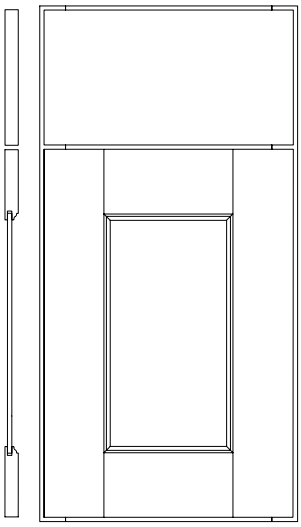

Standard slab drawer header

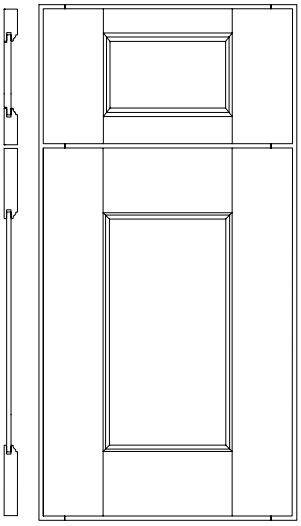

Optional 5-piece drawer header

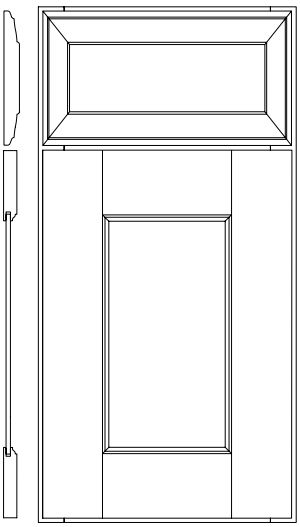

Optional Regent drawer profile

Door Frame: ¾" thick square 2¾" stiles and rails
Door Center Panel: ¼" veneer
Drawer Header Center Panel: Solid ⅜" reverse flat panel on 5-piece drawer header
Drawer Header Stile Width: 2¾"
Drawer Header Rail Width: 1½"

Species	Alder	Cherry	Hickory	Maple	Oak
Price Column	5	5	4	5	3
Species	Rustic Alder				
Price Column	5				

Overlay	Modern	
Outside Profile	L	
Hinge	Concealed	
Options	**Is it available?**	
5-Piece Header	Yes $93 per drawer header	page S-33
Profiled Header	No	
Regent Profile	Yes $27 per drawer header	page S-36
Optional Edge	Yes A, Deco, F, H, M, Z2	page S-34
Furniture Pegs	Yes	page S-35
Finger Routes	No	
Bevel Pulls	No	
Insert Doors	Yes Block 9500	
Mullion Doors	Yes Block 9530	
Thornton Insert Door	Yes Block 9520	
Veg Storage Drawer	Yes Block 9820	
Curved Doors	No	
Wall Cabinets	Yes	
Base Cabinets	Yes	
Tall Cabinets	Yes	
Vanity Cabinets	Yes	

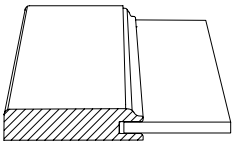

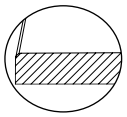

Outside profile is L

NOTES/CAUTIONS

1. 5-piece header only available on drawer headers 5 7/16" tall and greater.
2. Door and drawer hardware required.
3. Veneer center panel may have color variation from solid wood frame.
4. Glaze may not be as noticeable on this door style.
5. See Tipton for solid panel option.
6. The grain on the drawer header center panel runs horizontally.
7. Doors on these cabinets have 2¼" stiles: SCW21_, LSB33, SBC33FS, SLSB33, ASCW2124, ASCW2421, ASBC_FS, SSSW33, ASSSW, SBC33.

Full Access for Modern door styles

A cabinet that is 24" to 42" wide can be manufactured without the face frame center mullion. To order, prefix the cabinet nomenclature with a **2.** Styling will be butt doors. This is a no-charge option.

© Copyright StarMark Cabinetry FEBRUARY 2022

TEMPO

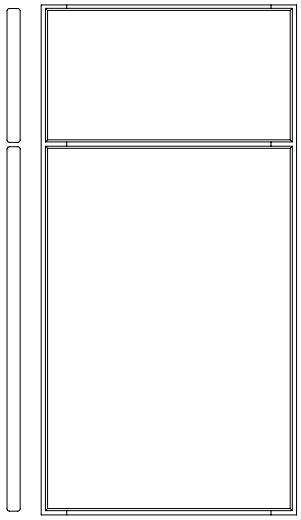

Standard slab drawer header

Material: Door and drawer header are ¾" solid wood

Species	Alder	Cherry	Hickory	Maple	Oak	
Price Column	6	6	3	6	2	
Species	Qtr. Sawn Oak			Walnut		
Price Column	7			6 (+25%)		
Overlay	Modern					
Outside Profile	L					
Hinge	Concealed					
Options	**Is it available?**					
5-Piece Header	No					
Profiled Header	No					
Regent Profile	No					
Optional Edge	Yes Deco, F, H, Z2			page S-34		
Furniture Pegs	No					
Finger Routes	No					
Bevel Pulls	No					
Insert Doors	Yes Built with Bridgeport style door			Block 9500		
Mullion Doors	Yes Built with Bridgeport style door			Block 9530		
Thornton Insert Door	No					
Veg Storage Drawer	Yes Built with Lancaster style header			Block 9820		
Curved Doors	Yes					
Wall Cabinets	Yes					
Base Cabinets	Yes					
Tall Cabinets	Yes					
Vanity Cabinets	Yes					

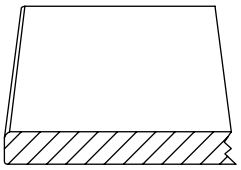

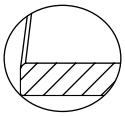

Outside profile is L

NOTES/CAUTIONS

1. **CAUTION:** Door may expand in humid climates. See Policies & Procedures: Climate Considerations.
2. Glaze hang-up may not be noticeable on this door style, but the glaze will change the tone of the stain.
3. Door and drawer hardware required.
4. See page S-6 for information on Modifications and Accessories when specifying Quarter Sawn Oak.
5. See Monroe for a slab door with the M edge. See Aero for a slab door with the A edge.
6. On Tip Up and Bifold Door cabinets greater than 24" in width, Tempo doors are veneer with edge banding on all four edges. The grain direction is vertical.

© Copyright StarMark Cabinetry FEBRUARY 2022

TIPTON

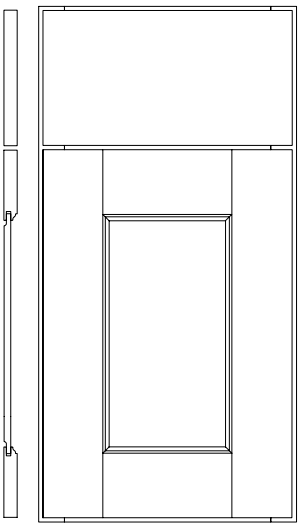

Standard slab drawer header

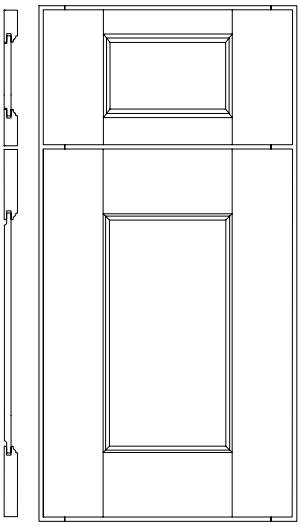

Optional 5-piece drawer header

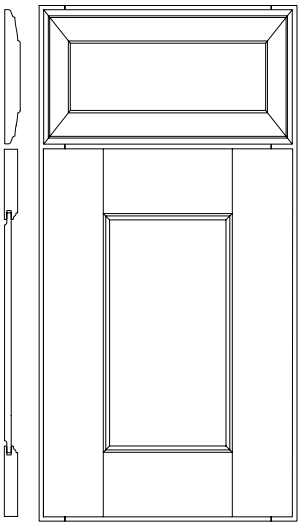

Optional Regent drawer profile

Door Frame: ¾" thick square 2¾" stiles and rails
Door Center Panel: Solid ⅜" reverse flat panel
Drawer Header Center Panel: Solid ⅜" reverse flat panel on 5-piece drawer header
Drawer Header Stile Width: 2¾"
Drawer Header Rail Width: 1½"

Species	Alder	Cherry	Hickory	Maple	Oak	
Price Column	7	7	6	7	5	
Species	Rustic Alder					
Price Column	7					
Overlay	Modern					
Outside Profile	L					
Hinge	Concealed					
Options	**Is it available?**					
5-Piece Header	Yes $93 per drawer header				page S-33	
Profiled Header	No					
Regent Profile	Yes $27 per drawer header				page S-36	
Optional Edge	Yes A, Deco, F, H, M, Z2				page S-34	
Furniture Pegs	Yes				page S-35	
Finger Routes	No					
Bevel Pulls	No					
Insert Doors	Yes		Block 9500			
Mullion Doors	Yes		Block 9530			
Thornton Insert Door	Yes		Block 9520			
Veg Storage Drawer	Yes		Block 9820			
Curved Doors	No					
Wall Cabinets	Yes					
Base Cabinets	Yes					
Tall Cabinets	Yes					
Vanity Cabinets	Yes					

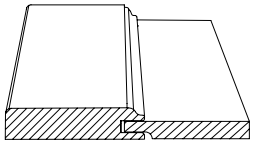

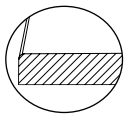

Outside profile is L

NOTES/CAUTIONS

1. 5-piece header only available on drawer headers 5 7/16" tall and greater.
2. Door and drawer hardware required.
3. Glaze may not be as noticeable on this door style.
4. The grain on the drawer header center panel runs horizontally.
5. See Taft for veneer panel option.
6. Doors on these cabinets have 2¼" stiles: SCW21_, LSB33, SBC33FS, SLSB33, ASCW2124, ASCW2421, ASBC_FS, SSSW33, ASSSW, SBC33.

Full Access for Modern door styles

A cabinet that is 24" to 42" wide can be manufactured without the face frame center mullion. To order, prefix the cabinet nomenclature with a **2.** Styling will be butt doors. This is a no-charge option.

© Copyright StarMark Cabinetry FEBRUARY 2022

TUCSON

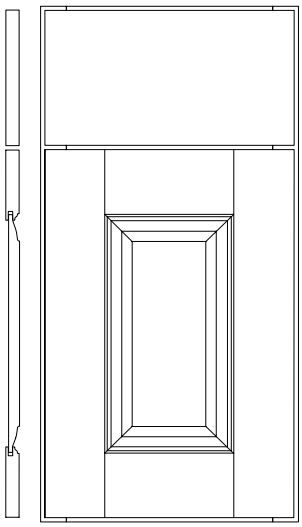

Standard slab drawer header

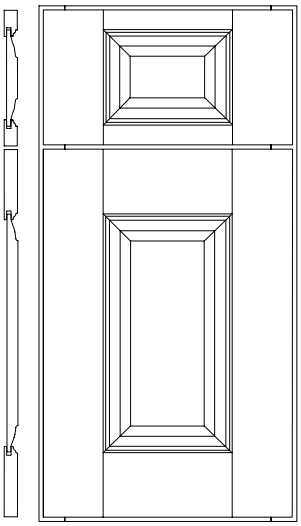

Optional 5-piece drawer header

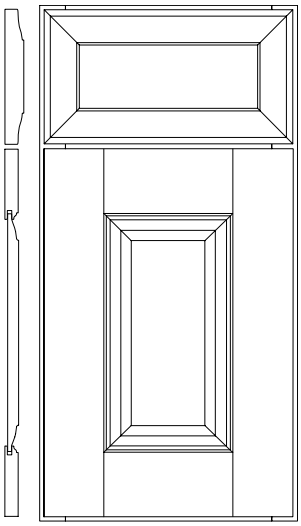

Optional profiled drawer header

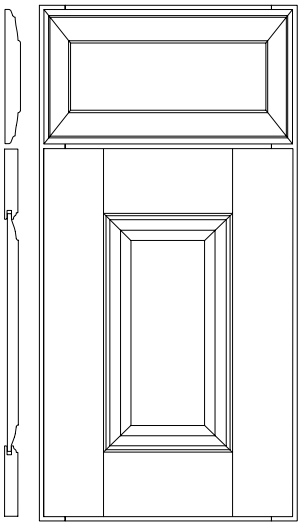

Optional Regent drawer profile

Door Frame: ¾" thick square 2¾" stiles and rails
Door Center Panel: Solid ⅝" raised panel
Drawer Header Center Panel: Solid ⅝" raised panel on 5-piece drawer header
Drawer Header Stile Width: 2¾"
Drawer Header Rail Width: 1½"

Species	Alder	Cherry	Hickory	Maple	Oak
Price Column	7	7	6	7	5
Species	Rustic Alder				
Price Column	7				
Overlay	Modern				
Outside Profile	L				
Hinge	Concealed				
Options	**Is it available?**				
5-Piece Header	Yes $93 per drawer header			page S-33	
Profiled Header	Yes $33 per drawer header			page S-36	
Regent Profile	Yes $27 per drawer header			page S-36	
Optional Edge	Yes A, Deco, F, H, M, Z2			page S-34	
Furniture Pegs	Yes			page S-35	
Finger Routes	No				
Bevel Pulls	No				
Insert Doors	Yes			Block 9500	
Mullion Doors	Yes			Block 9530	
Thornton Insert Door	Yes			Block 9520	
Veg Storage Drawer	Yes			Block 9820	
Curved Doors	No				
Wall Cabinets	Yes				
Base Cabinets	Yes				
Tall Cabinets	Yes				
Vanity Cabinets	Yes				

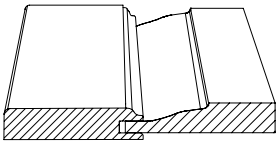

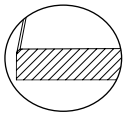

Outside profile is L

NOTES/CAUTIONS

1. 5-piece header only available on drawer headers 5⁷⁄₁₆" tall and greater.
2. Door and drawer hardware required.
3. The grain on the drawer header center panel runs horizontally.
4. Doors on these cabinets will have 2¼" stiles to allow for raised panel: SCW24__, SBC36, LSB36, SBC36FS, SSS36, SSSW36, SSSCW36, SBC36RSS, ASCW2124, ASCW2421, ASBC__FS, SSSW33, ASSSW, SBC33, SCW21__, LSB33, SBC33FS, SLSB33, B09, TB09, BFP09, BPTY09, W09__.
5. If you modify a cabinet, note that doors between 7¾" wide and 11⁷⁄₁₆" wide will have 2¼" stiles to allow for raised panel. Doors narrower than 7¾" will have a ⅜" reverse flat panel and 2¼" stiles.

© Copyright StarMark Cabinetry FEBRUARY 2022

VAIL

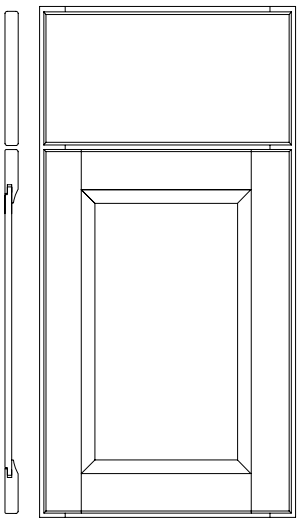

Standard slab drawer header

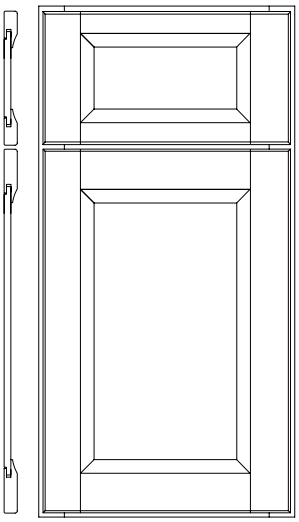

Optional 5-piece drawer header

Door Frame: ¾" thick square 2¾" stiles and rails
Door Center Panel: Solid ⅜" reverse flat panel
Drawer Header Center Panel: Solid ⅜" reverse flat panel on 5-piece drawer header
Drawer Header Stile Width: 2¾"
Drawer Header Rail Width: 1⅞"

Species	Alder	Cherry	Hickory	Maple	Oak
Price Column	10	10	9	10	9

Species	Rustic Alder	Qtr. Sawn Oak
Price Column	10	10

Overlay	Modern
Outside Profile	L
Hinge	Concealed

Options	**Is it available?**	
5-Piece Header	Yes $93 per drawer header	page S-33
Profiled Header	No	
Regent Profile	No	
Optional Edge	Yes A, Deco, F, H, M, Z2	page S-34
Furniture Pegs	Yes	page S-35
Finger Routes	No	
Bevel Pulls	No	
Insert Doors	Yes	Block 9500
Mullion Doors	Yes	Block 9530
Thornton Insert Door	Yes	Block 9520
Veg Storage Drawer	Yes	Block 9820
Curved Doors	No	
Wall Cabinets	Yes	
Base Cabinets	Yes	
Tall Cabinets	Yes	
Vanity Cabinets	Yes	

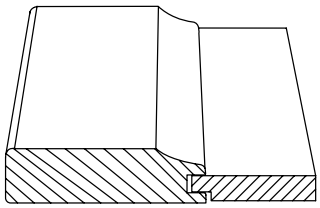

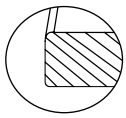

Outside profile is L

NOTES/CAUTIONS

1. 5-piece header only available on drawer headers 5 7/16" tall and greater.
2. Door and drawer hardware required.
3. The grain on the drawer header center panel runs horizontally.
4. See Victor for inset option.

Full Access for Modern door styles

A cabinet that is 24" to 42" wide can be manufactured without the face frame center mullion. To order, prefix the cabinet nomenclature with a **2.** Styling will be butt doors. This is a no-charge option.

© Copyright StarMark Cabinetry FEBRUARY 2022

VALLIANT

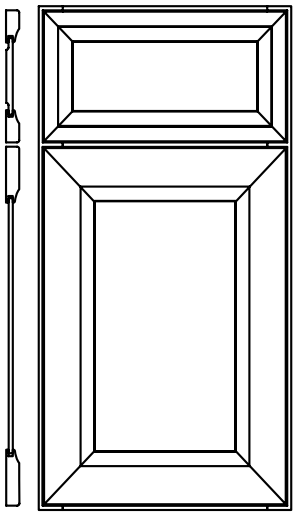

Standard 5-piece drawer header

Door Frame: ¾″ thick mitered 2¾″ stiles and rails
Door Center Panel: ¼″ veneer
Drawer Header Center Panel: Solid ⅜″ reverse flat panel
Drawer Header Stile and Rail Width: 1½″

Species	Alder	Cherry	Hickory	Maple	
Price Column	7	7	6	7	
Species	Oak	Rustic Alder		Qtr Sawn Oak	
Price Column	6	7		7	
Overlay	Modern				
Outside Profile	L				
Hinge	Concealed				
Options	**Is it available?**				
5-Piece Header	Standard				
Profiled Header	No				
Regent Profile	No				
Optional Edge	No				
Furniture Pegs	No				
Finger Routes	No				
Bevel Pulls	No				
Insert Doors	Yes		Block 9500		
Mullion Doors	Yes		Block 9530		
Thornton Insert Door	No				
Veg Storage Drawer	Yes Built with Lancaster style header		Block 9820		
Curved Doors	No				
Wall Cabinets	Yes				
Base Cabinets	Yes				
Tall Cabinets	Yes				
Vanity Cabinets	Yes				

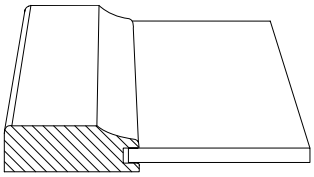

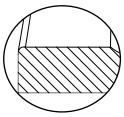

Outside profile is L

NOTES/CAUTIONS

1. 5-piece header only available on drawer headers 5 7/16″ tall and greater.
2. Door and drawer hardware required.
3. The grain on the drawer header center panel runs horizontally.
4. See page S-6 for information on Modifications and Accessories when specifying Quarter Sawn Oak.
5. See Ventura for solid panel option.

© Copyright StarMark Cabinetry FEBRUARY 2022

VENICE

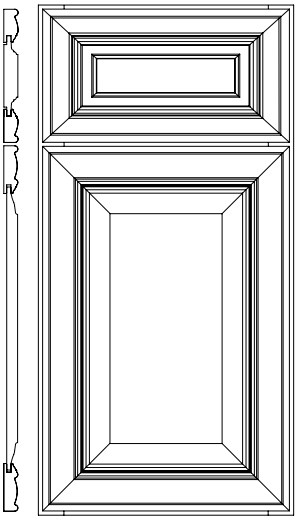

Standard 5-piece drawer header

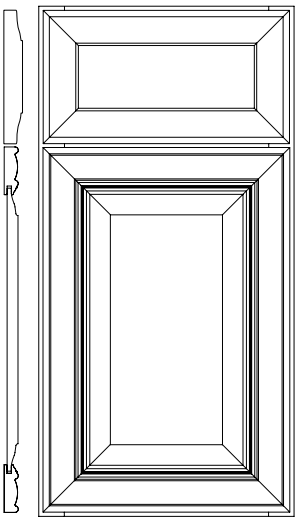

Optional profiled drawer header

Door Frame: ¾" thick mitered 2¾" stiles and rails
Door Center Panel: Solid ⅝" raised panel
Drawer Header Center Panel: Solid ⅝" raised panel
Drawer Header Stile and Rail Width: 1⅞"

Species	Alder	Cherry	Maple	Rustic Alder
Price Column	10	10	10	10
Overlay	Modern			
Outside Profile	Unique			
Hinge	Concealed			
Options	**Is it available?**			
5-Piece Header	Standard			
Profiled Header	Yes $33 per drawer header page S-36			
Regent Profile	No			
Optional Edge	No			
Furniture Pegs	No			
Finger Routes	No			
Bevel Pulls	No			
Insert Doors	Yes		Block 9500	
Mullion Doors	Yes		Block 9530	
Thornton Insert Door	No			
Veg Storage Drawer	Yes		Block 9820	
	Built with Lancaster style header			
Curved Doors	No			
Wall Cabinets	Yes			
Base Cabinets	Yes			
Tall Cabinets	Yes			
Vanity Cabinets	Yes			

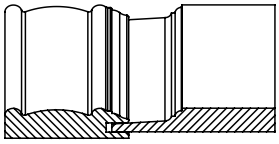

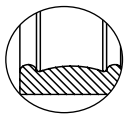

Outside profile is Unique

NOTES/CAUTIONS

1. 5-piece header only available on drawer headers 5⁷⁄₁₆" tall and greater.
2. ⅝" solid raised panel on 5-piece drawer header 6½" tall and greater.
3. Doors on cabinets ASCW2124, ASCW2421, ASBC__FS, SSSW33, ASSSW, SBC33, SCW21, SBC33FS, LSB33 and SLSB33 will be flat panel.
4. Door and drawer hardware required.
5. The grain on the drawer header center panel runs horizontally.

Full Access for Modern door styles

A cabinet that is 24" to 42" wide can be manufactured without the face frame center mullion. To order, prefix the cabinet nomenclature with a **2.** Styling will be butt doors. This is a no-charge option.

© Copyright StarMark Cabinetry FEBRUARY 2022

Customer Service: 800-550-2934 Technical: 800-551-3404

VENTURA

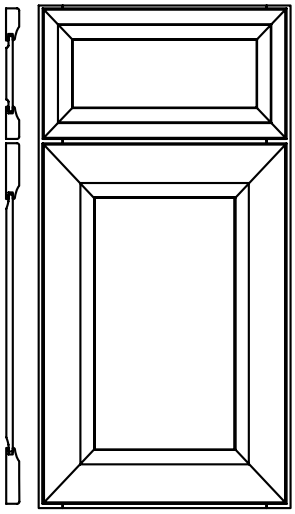

Standard 5-piece drawer header

Door Frame: ¾" thick mitered 2¾" stiles and rails
Door Center Panel: Solid ⅜" reverse flat panel
Drawer Header Center Panel: Solid ⅜" reverse flat panel
Drawer Header Stile and Rail Width: 1½"

Species	Alder	Cherry	Hickory	Maple	
Price Column	10	10	8	10	
Species	Oak	Rustic Alder		Qtr Sawn Oak	
Price Column	8	10		10	
Overlay	Modern				
Outside Profile	L				
Hinge	Concealed				
Options	**Is it available?**				
5-Piece Header	Standard				
Profiled Header	No				
Regent Profile	No				
Optional Edge	No				
Furniture Pegs	No				
Finger Routes	No				
Bevel Pulls	No				
Insert Doors	Yes		Block 9500		
Mullion Doors	Yes		Block 9530		
Thornton Insert Door	No				
Veg Storage Drawer	Yes Built with Lancaster style header		Block 9820		
Curved Doors	No				
Wall Cabinets	Yes				
Base Cabinets	Yes				
Tall Cabinets	Yes				
Vanity Cabinets	Yes				

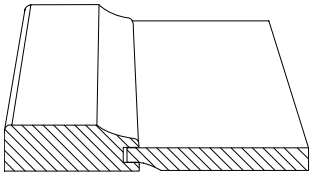

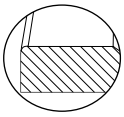

Outside profile is L

NOTES/CAUTIONS

1. 5-piece header only available on drawer headers 5 7/16" tall and greater.
2. Door and drawer hardware required.
3. The grain on the drawer header center panel runs horizontally.
4. See page S-6 for information on Modifications and Accessories when specifying Quarter Sawn Oak.
5. See Valliant for veneer panel option.

© Copyright StarMark Cabinetry FEBRUARY 2022

VERONA

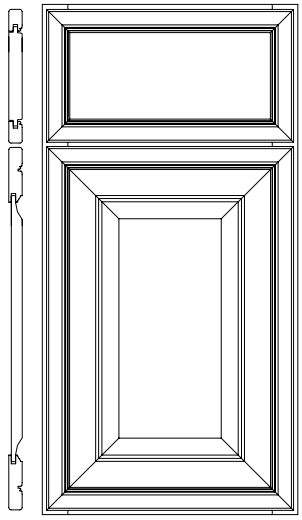

Standard 5-piece drawer header

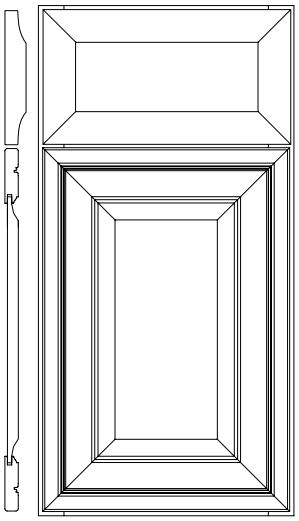

Optional profiled drawer header

Door Frame: ¾" thick mitered 3¼" stiles and rails
Door Center panel: Solid ⅝" raised panel
Drawer Header Center Panel: Solid ⅝" flat panel
Drawer Header Stile and Rail Width: 1¼"

Species	Cherry	Hickory	Maple
Price Columns	9	7	9
Overlay	Modern		
Outside Profile	L		
Hinge	Concealed		
Options	**Is it available?**		
5-Piece Header	Standard		
Profiled Header	Yes $33 per drawer header page S-36		
Regent Profile	No		
Optional Edge	No		
Furniture Pegs	No		
Finger Routes	No		
Bevel Pulls	No		
Insert Doors	Yes		Block 9500
Mullion Doors	Yes		Block 9530
Thornton Insert Door	No		
Veg Storage Drawer	Yes Built with Lancaster style header		Block 9820
Curved Doors	No		
Wall Cabinets	Yes		
Base Cabinets	Yes		
Tall Cabinets	Yes		
Vanity Cabinets	Yes		

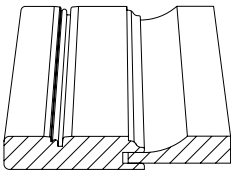

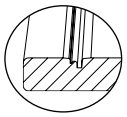

Outside profile is L

NOTES/CAUTIONS

1. 5-piece header only available on drawer headers 5 7/16" tall and greater
2. Doors on cabinets ASCW2124, ASCW2421, ASBC__FS, SSSW33, ASSSW, SBC33, SCW21, SBC33FS, LSB33 and SLSB33 will be flat panel.
3. Door and drawer hardware required
4. Doors for a 9" wide cabinet will be flat panel.
5. The grain on the drawer header center panel runs horizontally.

Full Access for Modern door styles

A cabinet that is 24" to 42" wide can be manufactured without the face frame center mullion. To order, prefix the cabinet nomenclature with a **2.** Styling will be butt doors. This is a no-charge option.

© Copyright StarMark Cabinetry FEBRUARY 2022

VIOLA

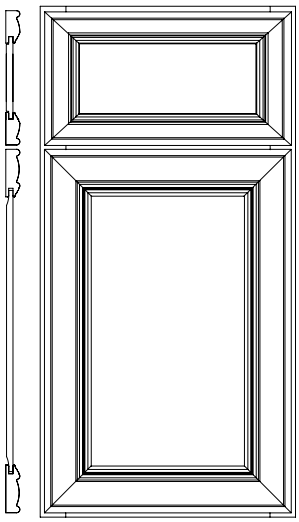

Standard 5-piece drawer header

Door Frame: ¾" thick mitered 2¾" stiles and rails
Door Center Panel: Solid ⅜" reverse flat panel
Drawer Header Center Panel: Solid ⅜" reverse flat panel
Drawer Header Stile and Rail Width: 1⅞"

Species	Alder	Cherry	Maple	Rustic Alder
Price Column	10	10	10	10
Overlay	Modern			
Outside Profile	Unique			
Hinge	Concealed			
Options	**Is it available?**			
5-Piece Header	Standard			
Profiled Header	No			
Regent Profile	No			
Optional Edge	No			
Furniture Pegs	No			
Finger Routes	No			
Bevel Pulls	No			
Insert Doors	Yes		Block 9500	
Mullion Doors	Yes		Block 9530	
Thornton Insert Door	No			
Veg Storage Drawer	Yes Built with Lancaster style header		Block 9820	
Curved Doors	No			
Wall Cabinets	Yes			
Base Cabinets	Yes			
Tall Cabinets	Yes			
Vanity Cabinets	Yes			

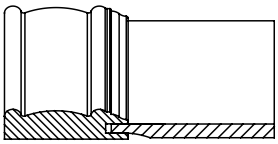

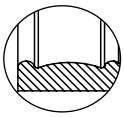

Outside profile is Unique

NOTES/CAUTIONS

1. 5-piece header only available on drawer headers 5 7/16" tall and greater.
2. Door and drawer hardware required.
3. The grain on the drawer header center panel runs horizontally.

Full Access for Modern door styles

A cabinet that is 24" to 42" wide can be manufactured without the face frame center mullion. To order, prefix the cabinet nomenclature with a **2.** Styling will be butt doors. This is a no-charge option.

© Copyright StarMark Cabinetry FEBRUARY 2022

WATERFALL

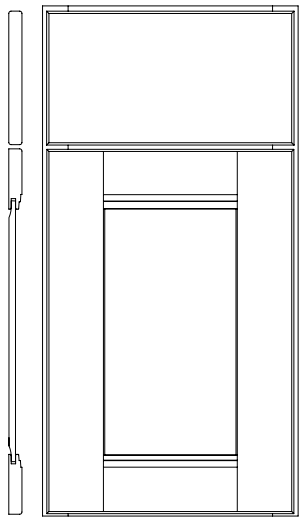

Standard slab drawer header

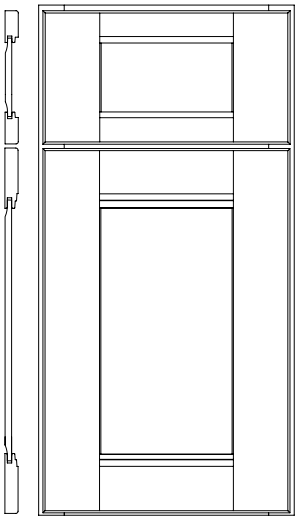

Optional 5-piece drawer header

Door Frame: ¾" thick square 2¾" stiles and rails
Door Center Panel: Solid ⅜" reverse flat panel
Drawer Header Center Panel: Solid ⅜" reverse flat panel on 5-piece drawer header
Drawer Header Stile Width: 2¾"
Drawer Header Rail Width: 1½"

Species	Alder	Cherry	Hickory	Maple	Oak	Rustic Alder
Price Column	7	7	6	7	6	7
Overlay	Modern					
Outside Profile	L					
Hinge	Concealed					
Options	**Is it available?**					
5-Piece Header	Yes $93 per drawer header					page S-33
Profiled Header	No					
Regent Profile	No					
Optional Edge	Yes A, Deco, F, H, M, Z2					page S-34
Furniture Pegs	Yes					page S-35
Finger Routes	No					
Bevel Pulls	No					
Insert Doors	Yes			Block 9500		
Mullion Doors	Yes			Block 9530		
Thornton Insert Door	Yes			Block 9520		
Veg Storage Drawer	Yes			Block 9820		
Curved Doors	No					
Wall Cabinets	Yes					
Base Cabinets	Yes					
Tall Cabinets	Yes					
Vanity Cabinets	Yes					

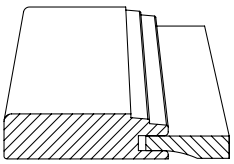

Door rail and center panel shown

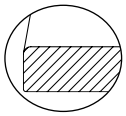

Outside profile is L

NOTES/CAUTIONS

1. 5-piece header only available on drawer headers 5⁷⁄₁₆" tall and greater.
2. Single step inside profile on 5-piece header, to accommodate hardware placement. The door has a double step inside profile.
3. Door and drawer hardware required.
4. The grain on the drawer header center panel runs horizontally.
5. See Waynesville for veneer panel option.
6. See Winterhaven for inset option.
7. Doors on these cabinets have 2¼" stiles: SCW21_, LSB33, SBC33FS, SLSB33, ASCW2124, ASCW2421, ASBC_FS, SSSW33, ASSSW, SBC33.

Full Access for Modern door styles

A cabinet that is 24" to 42" wide can be manufactured without the face frame center mullion. To order, prefix the cabinet nomenclature with a **2.** Styling will be butt doors. This is a no-charge option.

© Copyright StarMark Cabinetry FEBRUARY 2022

WAYNESVILLE

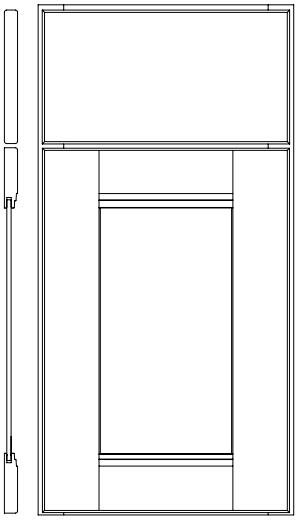

Standard slab drawer header

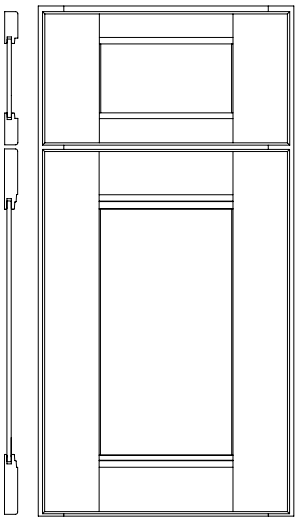

Optional 5-piece drawer header

Door Frame: ¾″ thick square 2¾″ stiles and rails
Door Center Panel: ¼″ veneer
Drawer Header Center Panel: ¼″ veneer on 5-piece drawer header
Drawer Header Stile Width: 2¾″
Drawer Header Rail Width: 1½″

Species	Alder	Cherry	Hickory	Maple	Oak	Rustic Alder
Price Column	4	4	3	3	3	4
Overlay	Modern					
Outside Profile	L					
Hinge	Concealed					
Options	**Is it available?**					
5-Piece Header	Yes $93 per drawer header					page S-33
Profiled Header	No					
Regent Profile	No					
Optional Edge	Yes A, Deco, F, H, M, Z2					page S-34
Furniture Pegs	Yes					page S-35
Finger Routes	No					
Bevel Pulls	No					
Insert Doors	Yes			Block 9500		
Mullion Doors	Yes			Block 9530		
Thornton Insert Door	Yes			Block 9520		
Veg Storage Drawer	Yes			Block 9820		
Curved Doors	No					
Wall Cabinets	Yes					
Base Cabinets	Yes					
Tall Cabinets	Yes					
Vanity Cabinets	Yes					

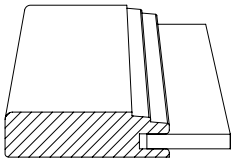

Door rail and center panel shown

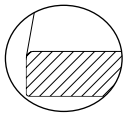

Outside profile is L

NOTES/CAUTIONS

1. 5-piece header only available on drawer headers 5 7/16″ tall and greater.
2. Single step inside profile on 5-piece header, to accommodate hardware placement. The door has a double step inside profile.
3. Door and drawer hardware required.
4. Veneer center panel may have color variation from solid wood frame.
5. The grain on the drawer header center panel runs horizontally.
6. See Waterfall for solid panel option.
7. Doors on these cabinets have 2¼″ stiles: SCW21_, LSB33, SBC33FS, SLSB33, ASCW2124, ASCW2421, ASBC_FS, SSSW33, ASSSW, SBC33.

© Copyright StarMark Cabinetry FEBRUARY 2022

WESTERLY

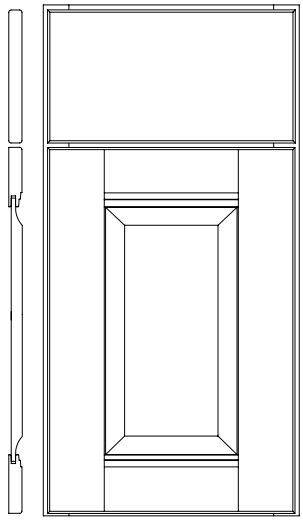

Standard slab drawer header

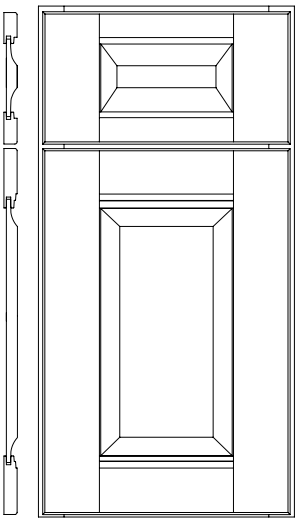

Optional 5-piece drawer header

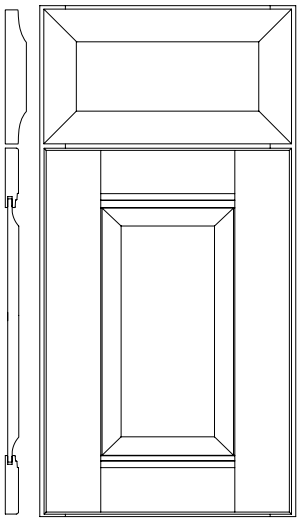

Optional profiled drawer header

Door Frame: ¾" thick square 2¾" stiles and rails
Door Center Panel: Solid ⅝" raised panel
Drawer Header Center Panel: Solid ⅝" raised panel on 5-piece drawer header
Drawer Header Stile Width: 2¾"
Drawer Header Rail Width: 1½"

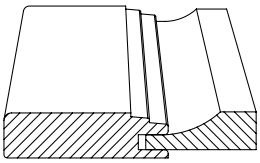

Door rail and center panel shown

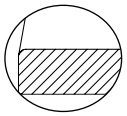

Outside profile is L

Species	Alder	Cherry	Hickory	Maple	Oak	Rustic Alder
Price Column	7	7	6	7	6	7
Overlay	Modern					
Outside Profile	L					
Hinge	Concealed					
Options	**Is it available?**					
5-Piece Header	Yes $93 per drawer header					page S-33
Profiled Header	Yes $33 per drawer header					page S-36
Regent Profile	No					
Optional Edge	Yes A, Deco, F, H, M, Z2					page S-34
Furniture Pegs	Yes					page S-35
Finger Routes	No					
Bevel Pulls	No					
Insert Doors	Yes			Block 9500		
Mullion Doors	Yes			Block 9530		
Thornton Insert Door	Yes			Block 9520		
Veg Storage Drawer	Yes			Block 9820		
Curved Doors	No					
Wall Cabinets	Yes					
Base Cabinets	Yes					
Tall Cabinets	Yes					
Vanity Cabinets	Yes					

NOTES/CAUTIONS

1. 5-piece header only available on drawer headers 5 7/16" tall and greater.
2. Single step inside profile on 5-piece header, to accommodate hardware placement. The door has a double step inside profile.
3. Door and drawer hardware required.
4. The grain on the drawer header center panel runs horizontally.
5. Doors on these cabinets will have 2¼" stiles to allow for raised panel: SCW24__, SBC36, LSB36, SBC36FS, SSS36, SSSW36, SSSCW36, , SBC36RSS, ASCW2124, ASCW2421, ASBC__FS, SSSW33, ASSSW, SBC33, SCW21__, LSB33, SBC33FS, SLSB33, B09, TB09, BFP09, BPTY09, W09__.
6. If you modify a cabinet, note that doors between 7¾" wide and 11 7/16" wide will have 2¼" stiles to allow for raised panel. Doors narrower than 7¾" will have a ⅜" reverse flat panel and 2¼" stiles.

Full Access for Modern door styles

A cabinet that is 24" to 42" wide can be manufactured without the face frame center mullion. To order, prefix the cabinet nomenclature with a **2.** Styling will be butt doors. This is a no-charge option.

© Copyright StarMark Cabinetry FEBRUARY 2022

XAVIER

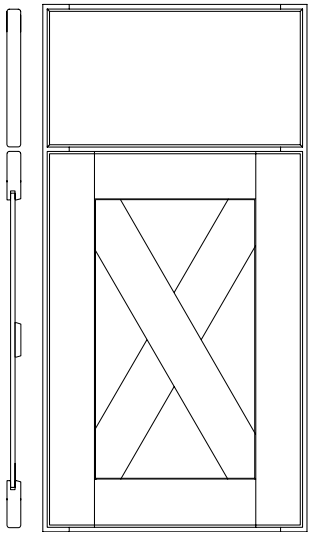

Standard slab drawer header

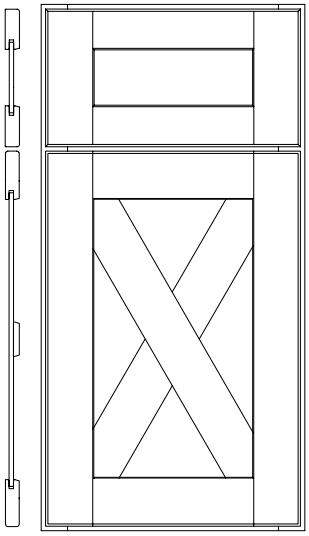

Optional 5-piece drawer header

Door Frame: ¾" thick square 2¼" stiles and rails
Door Center Panel: ¼" veneer
Drawer Header Center Panel: ¼" veneer on 5-piece drawer header
Drawer Header Stile Width: 2¼"
Drawer Header Rail Width: 1½"

Species	Alder	Cherry	Hickory	Maple	Oak	
Price Column	10	10	10	10	10	
Species	Rustic Alder	Rustic Hickory				
Price Column	10	10				
Species	Qtr. Sawn Oak					
Price Column	10					
Overlay	Modern					
Outside Profile	L					
Hinge	Concealed					
Options	**Is it available?**					
5-Piece Header	Yes $93 per drawer header				page S-33	
Profiled Header	No					
Regent Profile	No					
Optional Edge	Yes A, Deco, F, H, M, Z2				page S-34	
Furniture Pegs	Yes				page S-35	
Finger Routes	No					
Bevel Pulls	No					
Insert Doors	Yes			Block 9500		
Mullion Doors	Yes			Block 9530		
	Built with Bridgeport style door					
Thornton Insert Door	Yes			Block 9520		
Veg Storage Drawer	Yes			Block 9820		
Curved Doors	No					
Wall Cabinets	Yes					
Base Cabinets	Yes					
Tall Cabinets	Yes					
Vanity Cabinets	Yes					

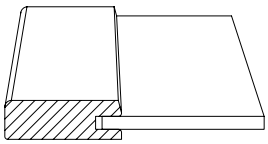

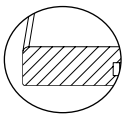

Outside profile is L

NOTES/CAUTIONS

1. 5-piece header only available on drawer headers 5 7/16" tall and greater.
2. Glaze may not be as noticeable on this door style.
3. Door and drawer hardware required.
4. Veneer center panel may have color variation from solid wood frame.
5. See Xenon for inset option.
6. The grain on the drawer header center panel runs horizontally.
7. Xavier Insert Doors include X crossmembers.
8. On Rustic doors, the door frame and the X crossmembers are rustic. The center panel is not rustic.
9. Doors less than 10⅜" in width are built without X crossmembers.
10. The Xavier door style is not available in the Villa finish.

© Copyright StarMark Cabinetry FEBRUARY 2022

Use Space for Notes

Full Access for Modern door styles

A cabinet that is 24" to 42" wide can be manufactured without the face frame center mullion. To order, prefix the cabinet nomenclature with a **2.** Styling will be butt doors. This is a no-charge option.

© Copyright StarMark Cabinetry FEBRUARY 2022

Use Space for Notes

© Copyright StarMark Cabinetry FEBRUARY 2022

Use Space for Notes

© Copyright StarMark Cabinetry FEBRUARY 2022

TRADITIONAL ½" OVERLAY

DOOR	SPECIES
Alite	Alder, Cherry, Hickory, Maple, Oak, Rustic Alder, Rustic Hickory
Ashford	Alder, Cherry, Hickory, Maple, Oak, Rustic Alder
Bedford	Alder, Cherry, Hickory, Maple, Oak, Rustic Alder
Salem	Alder, Cherry, Hickory, Maple, Oak, Rustic Alder
Tudor	Alder, Cherry, Hickory, Maple, Oak, Rustic Alder, Rustic Hickory

Full Access for Traditional door styles

A cabinet that is 24" to 42" wide can be manufactured without the face frame center mullion. To order, prefix the cabinet nomenclature with a **2.** This is a no-charge option. Base cabinets and certain wall cabinets will receive full-width drawer or header.

© Copyright StarMark Cabinetry FEBRUARY 2022

ALITE

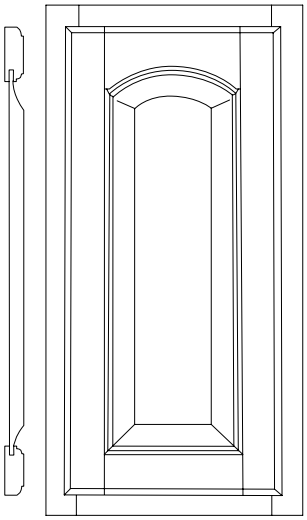

Alite arched door

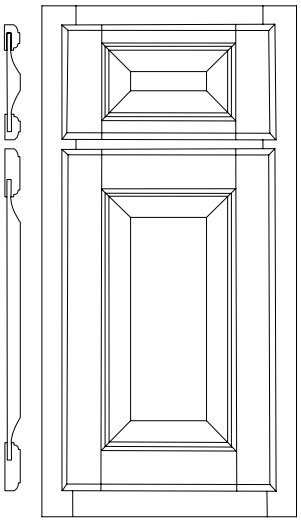

Optional 5-piece drawer header

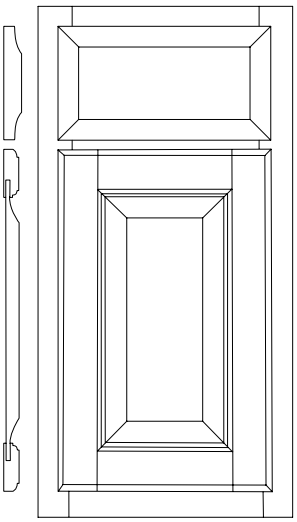

Optional profiled drawer header

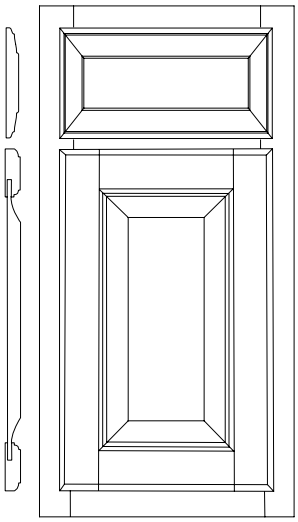

Optional Regent drawer profile

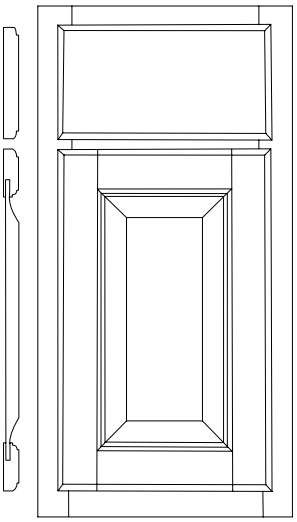

Standard slab drawer header

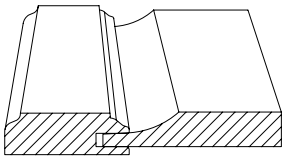

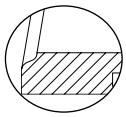

Outside profile is F

Door Frame: ¾″ thick square 2¼″ stiles and rails
Door Center Panel: Solid ⅝″ raised panel
Drawer Header Center Panel: Solid ⅝″ raised panel on 5-piece drawer header

Species	Alder	Cherry	Hickory	
Price Column	5	6	3	
Species	Maple	Oak		
Price Column	6	2		
Species	Rustic Alder	Rustic Hickory		
Price Column	5	3		
Overlay	Traditional			
Outside Profile	F			
Hinge	Concealed			
Options	**Is it available?**			
5-Piece Header	Yes	$93 per drawer header		page S-33
Profiled Header	Yes	$33 per drawer header		page S-36
Regent Profile	Yes	$27 per drawer header		page S-36
Optional Edge	Yes	A, Deco, H, L, M, Z2		page S-34
Furniture Pegs	Yes			page S-35
Finger Routes	Yes			page S-35
Bevel Pulls	Yes			page S-35
Insert Doors	Yes	Block 9500		
Mullion Doors	Yes	Block 9530		
Thornton Insert Door	Yes	Block 9520		
Veg Storage Drawer	Yes	Block 9820		
Curved Doors	Yes			
Wall Cabinets	Yes			
Base Cabinets	Tudor			
Tall Cabinets	Upper doors - Yes Lower doors will be Tudor			
Vanity Cabinets	Yes			

NOTES/CAUTIONS

1. 5-piece header only available on drawer headers 5⁷⁄₁₆″ tall and greater.
2. Glaze may not be as noticeable on this door style.
3. Upper and lower doors will be Alite arched door when a vanity cabinet is 31½″ or taller. In vanity cabinets less than 31½″, the lower doors will be Tudor.
4. The grain on the drawer header center panel runs horizontally.

© Copyright StarMark Cabinetry FEBRUARY 2022

ASHFORD

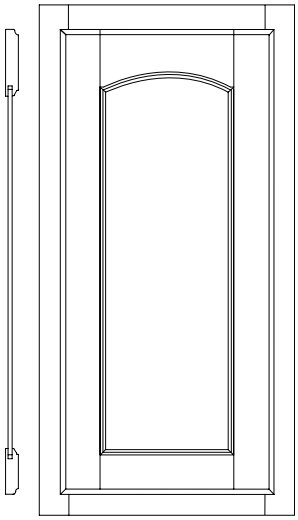

Ashford arched door

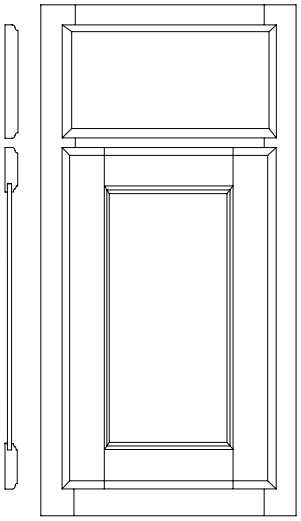

Standard slab drawer header

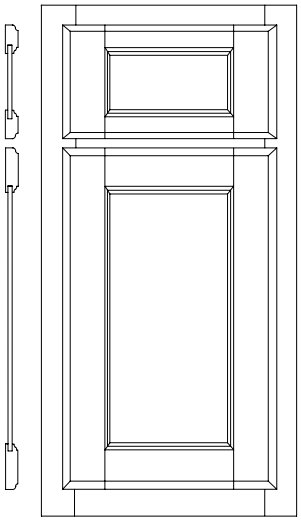

Optional 5-piece drawer header

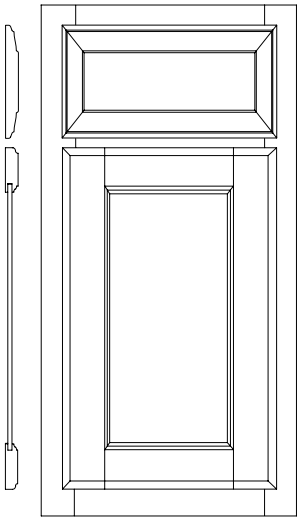

Optional Regent drawer profile

Door Frame: ¾" thick square 2¼" stiles and rails
Door Center Panel: ¼" veneer
Drawer Header Center Panel: ¼" veneer on 5-piece drawer header

Species	Alder	Cherry	Hickory	Maple	Oak	Rustic Alder
Price Column	2	2	2	2	1	2
Overlay	Traditional					
Outside Profile	F					
Hinge	Concealed					

Options	**Is it available?**	
5-Piece Header	Yes $93 per drawer header	page S-33
Profiled Header	No	
Regent Profile	Yes $27 per drawer header	page S-36
Optional Edge	Yes A, Deco, H, L, M, Z2	page S-34
Furniture Pegs	Yes	page S-35
Finger Routes	Yes	page S-35
Bevel Pulls	Yes	page S-35
Insert Doors	Yes	Block 9500
Mullion Doors	Yes	Block 9530
Thornton Insert Door	Yes	Block 9520
Veg Storage Drawer	Yes	Block 9820
Curved Doors	No	
Wall Cabinets	Yes	
Base Cabinets	Salem	
Tall Cabinets	Upper doors - Yes Lower doors will be Salem	
Vanity Cabinets	Yes	

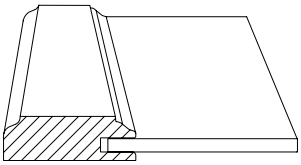

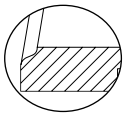

Outside profile is F

NOTES/CAUTIONS

1. 5-piece header only available on drawer headers 5 7/16" tall and greater.
2. Veneer center panel may have color variation from solid wood frame.
3. Upper and lower doors will be Ashford arched door when a vanity cabinet is 31½" or taller. In vanity cabinets less than 31½", the lower doors will be Salem.
4. The grain on the drawer header center panel runs horizontally.

© Copyright StarMark Cabinetry FEBRUARY 2022

BEDFORD

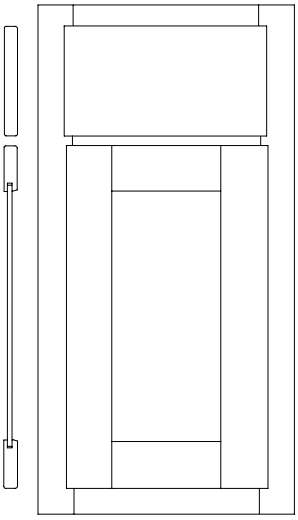

Standard slab drawer header

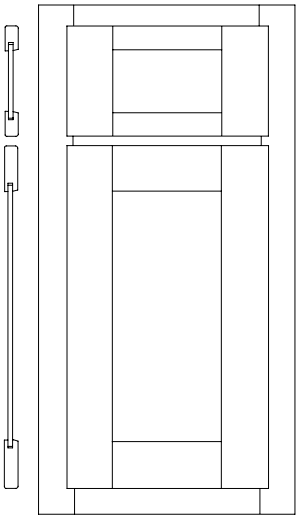

Optional 5-piece drawer header

Door Frame: ¾" thick square 2¼" stiles and rails
Door Center Panel: ¼" veneer
Drawer Header Center Panel: ¼" veneer on 5-piece drawer header

Species	Alder	Cherry	Hickory	Maple	Oak	Rustic Alder
Price Column	2	2	2	2	1	2
Overlay	Traditional					
Outside Profile	L					
Hinge	Concealed					

Options	**Is it available?**	
5-Piece Header	Yes $93 per drawer header	page S-33
Profiled Header	No	
Regent Profile	No	
Optional Edge	Yes A, Deco, F, H, M, Z2	page S-34
Furniture Pegs	Yes	page S-35
Finger Routes	Yes	page S-35
Bevel Pulls	Yes	page S-35
Insert Doors	Yes Block 9500	
Mullion Doors	Yes Block 9530	
Thornton Insert Door	Yes Block 9520	
Veg Storage Drawer	Yes Block 9820	
Curved Doors	No	
Wall Cabinets	Yes	
Base Cabinets	Yes	
Tall Cabinets	Yes	
Vanity Cabinets	Yes	

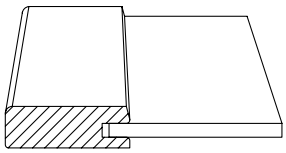

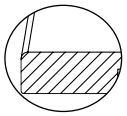

Outside profile is L

NOTES/CAUTIONS

1. 5-piece header only available on drawer headers 5 7/16" tall and greater.
2. Glaze may not be as noticeable on this door style.
3. Veneer center panel may have color variation from solid wood frame.
4. See Bridgeport for Modern overlay option.
5. The grain on the drawer header center panel runs horizontally.

Full Access for Traditional door styles

A cabinet that is 24" to 42" wide can be manufactured without the face frame center mullion. To order, prefix the cabinet nomenclature with a **2.** This is a no-charge option. Base cabinets and certain wall cabinets will receive full-width drawer or header.

© Copyright StarMark Cabinetry FEBRUARY 2022

Customer Service: 800-550-2934 Technical: 800-551-3404

SALEM

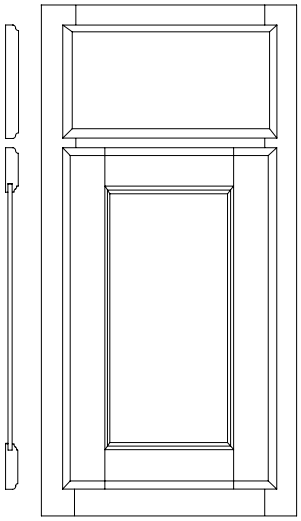

Standard slab drawer header

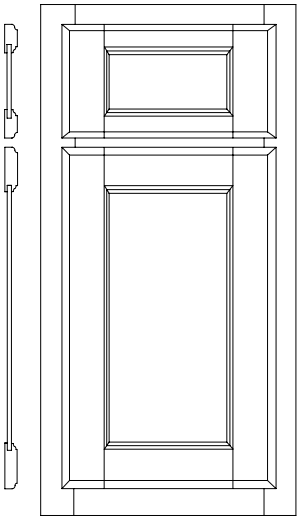

Optional 5-piece drawer header

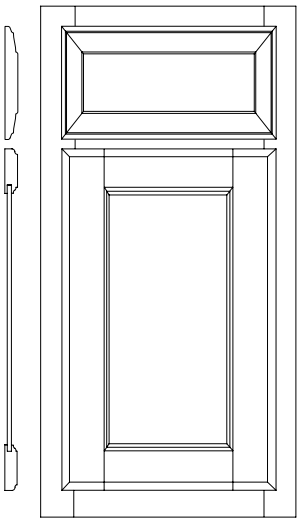

Optional Regent drawer profile

Door Frame: ¾" thick square 2¼" stiles and rails
Door Center Panel: ¼" veneer
Drawer Header Center Panel: ¼" veneer on 5-piece drawer header

Species	Alder	Cherry	Hickory	Maple	Oak	Rustic Alder
Price Column	2	2	1	2	1	2
Overlay	Traditional					
Outside Profile	F					
Hinge	Concealed					

Options	**Is it available?**	
5-Piece Header	Yes $93 per drawer header	page S-33
Profiled Header	No	
Regent Profile	Yes $27 per drawer header	page S-36
Optional Edge	Yes A, Deco, H, L, M, Z2	page S-34
Furniture Pegs	Yes	page S-35
Finger Routes	Yes	page S-35
Bevel Pulls	Yes	page S-35
Insert Doors	Yes Block 9500	
Mullion Doors	Yes Block 9530	
Thornton Insert Door	Yes Block 9520	
Veg Storage Drawer	Yes Block 9820	
Curved Doors	No	
Wall Cabinets	Yes	
Base Cabinets	Yes	
Tall Cabinets	Yes	
Vanity Cabinets	Yes	

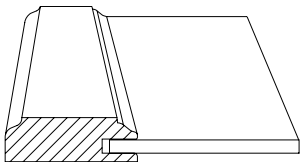

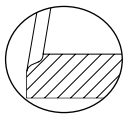

Outside profile is F

NOTES/CAUTIONS

1. 5-piece header only available on drawer headers 5 7/16" tall and greater.
2. Glaze may not be as noticeable on this door style.
3. Veneer center panel may have color variation from solid wood frame.
4. See Stratford for Modern overlay option.
5. The grain on the drawer header center panel runs horizontally.

© Copyright StarMark Cabinetry FEBRUARY 2022

TUDOR

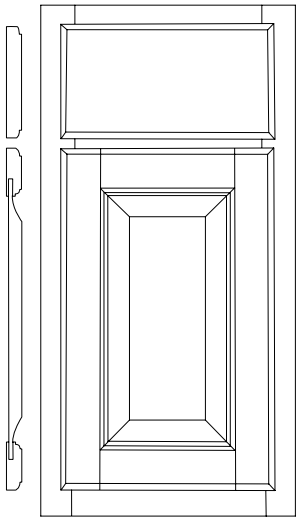

Standard slab drawer header

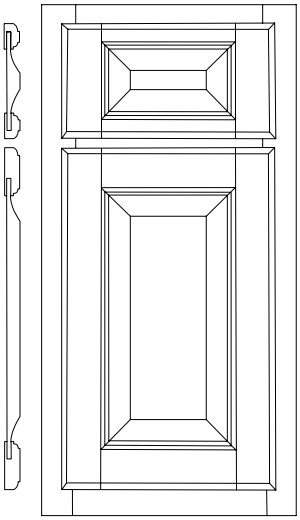

Optional 5-piece drawer header

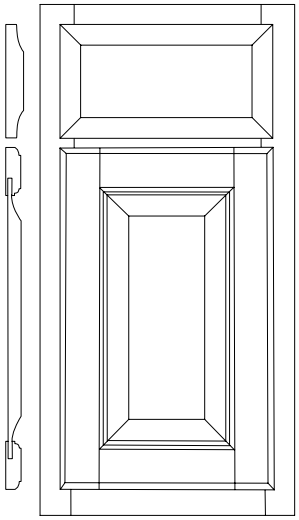

Optional profiled drawer header

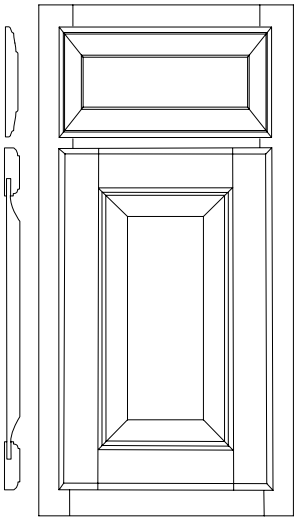

Optional Regent drawer profile

Door Frame: ¾" thick square 2¼" stiles and rails
Door Center Panel: Solid ⅝" raised panel
Drawer Header Center Panel: Solid ⅝" raised panel on 5-piece drawer header

Species	Alder	Cherry	Hickory	
Price Column	5	6	3	
Species	Maple	Oak		
Price Column	6	2		
Species	Rustic Alder	Rustic Hickory		
Price Column	5	3		
Overlay	Traditional			
Outside Profile	F			
Hinge	Concealed			
Options	**Is it available?**			
5-Piece Header	Yes	$93 per drawer header		page S-33
Profiled Header	Yes	$33 per drawer header		page S-36
Regent Profile	Yes	$27 per drawer header		page S-36
Optional Edge	Yes	A, Deco, H, L, M, Z2		page S-34
Furniture Pegs	Yes			page S-35
Finger Routes	Yes			page S-35
Bevel Pulls	Yes			page S-35
Insert Doors	Yes	Block 9500		
Mullion Doors	Yes	Block 9530		
Thornton Insert Door	Yes	Block 9520		
Veg Storage Drawer	Yes	Block 9820		
Curved Doors	Yes			
Wall Cabinets	Yes			
Base Cabinets	Yes			
Tall Cabinets	Yes			
Vanity Cabinets	Yes			

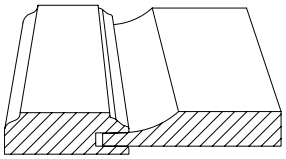

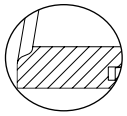

Outside profile is F

NOTES/CAUTIONS

1. 5-piece header only available on drawer headers 5 7/16" tall and greater.
2. Glaze may not be as noticeable on this door style.
3. See Breckenridge for Modern overlay option.
4. The grain on the drawer header center panel runs horizontally.

© Copyright StarMark Cabinetry FEBRUARY 2022

INDEX

Door Style Options Availability by Door S-132–135
Maple Door Styles S-136–138
Cherry Door Styles. S-139–140
Hickory and Rustic Hickory Door Styles S-141–142
Alder and Rustic Alder Door Styles S-145–147
Oak Door Styles S-148–151
Quarter Sawn Oak Door Styles. S-152–154
Walnut Door Styles S-155
MDF Door Styles S-156

© Copyright StarMark Cabinetry FEBRUARY 2022

DOOR STYLE OPTIONS A-C: Availability by Door

Species and Style Options	Abilene (NEW!)	Accord	Aero	Alite	Altamonte	Anita (NEW!)	Arlington	Ashford	Avendale	Bedford	Belfonte (NEW!)	Bell Gardens	Bethany	Bonita	Breckenridge	Bridgeport	Brisbane	Calais	Chappell (NEW!)	Chesapeake (NEW!)	Clifton (NEW!)	Coralville	Cosmopolitan
	Doors																						
Species Options																							
Alder	X	X	X	X	X	X	X	X	X	X	X	X		X	X	X			X	X	X	X	X
Cherry	X	X	X	X	X	X	X	X	X	X	X	X	X	X	X	X	X	X	X	X	X	X	X
Hickory	X	X	X	X		X		X	X	X	X		X	X	X	X	X	X	X	X	X	X	X
Maple	X	X	X	X	X	X	X	X	X	X	X	X	X	X	X	X	X	X	X	X	X	X	X
Oak	X	X	X	X		X		X	X	X	X		X	X	X	X	X		X	X	X	X	X
Quarter Sawn Oak	X					X					X								X			X	X
Rustic Alder ❖	X	X		X	X	X	X	X	X	X	X	X		X	X	X			X	X	X	X	X
Rustic Hickory ❖		X		X											X								
Walnut		X												X	X	X						X	X
Styling Options																							
Bevel Pulls				X				X		X													
Finger Routes				X				X		X													
Five (5) piece header	X	X		X	S	X	S	X	X	X	X	S	S	X	X	X	S	S	X	X	X	X	X
Profiled Header		X		X			X					X			X								
Furniture Pegs	X	X		X		X		X	X	X	X			X	X	X			X	X	X	X	X
Regent Profile		X		X				X	X						X					X	X		
Optional Edges																							
A Edge	X	X	S	X		X		X	X	X	X			X	X	X			X	X	X	X	X
Decorator Edge	X	X	X	X		X		X	X	X	X			X	X	X			X	X	X	X	X
F Edge	X	X	X	S		X		S	X	X	X			X	S	X			X	X	X	X	X
H Edge	X	X	X	X		X		X	X	X	X			X	X	X			X	X	X	X	X
L Edge	S	X	X	X		S		X	X	S	S			S	X	S		S	S	S	S	S	S
M Edge	X	X	X	X		X		X	X	X	X			X	X	X			X	X	X	X	X
Z2 Edge	X	S	X	X		X		X	S	X	X			X	X	X			X	X	X	X	X
Construction Information																							
Hinge Used																							
Concealed	X	X	X	X	X	X	X	X	X	X	X	X	X	X	X	X	X	X	X	X	X	X	X
Reveal Used																							
Modern	X	X	X		X	X	X		X		X	X	X	X	X	X	X	X	X	X	X	X	X
Traditional				X				X		X													

S = Standard. The option comes standard with the door style.

❖ RUSTIC SPECIES

There is no upcharge for **Rustic Alder or Rustic Hickory**.

WALNUT

Upcharge 25%

STYLING OPTIONS

Option	Page
Bevel Pulls	S-35
Optional Edge	S-34
Finger Routes	S-35
Five (5) Piece Header	S-33
Furniture Pegs	S-35
Profiled Header	S-36
Regent Profile	S-36

HINGES

Hinges are described on page S-2.

REVEALS

Reveals are described on page S-29.

© Copyright StarMark Cabinetry FEBRUARY 2022

DOOR STYLE OPTIONS E-L: Availability by Door

Species and Style Options	Doors																	
	Edgemore	Edinburgh (NEW!)	Ellington	Farmington	Fullerton	Gallant	Georgetown	Glendale	Griffon	Hampton	Hanover	Harbor	Harrison	Hudson	Huntingford	Laguna	Lancaster	Lehigh
Species Options																		
Alder	X	X	X	X	X		X			X	X	X	X	X	X	X	X	X
Cherry	X	X	X	X	X	X	X	X	X	X	X	X	X	X	X	X	X	X
Hickory	X	X		X	X		X		X	X	X	X	X	X	X	X	X	X
Maple	X	X	X	X	X	X	X	X	X	X	X	X	X	X	X	X	X	X
Oak	X	X		X	X		X		X	X	X	X	X	X	X	X	X	X
Quarter Sawn Oak	X	X		X														
Rustic Alder ❖	X	X	X	X	X		X				X	X	X	X		X	X	X
Rustic Hickory ❖					X		X											
Walnut				X	X						X		X	X				
Styling Options																		
Bevel Pulls																		
Finger Routes																		
Five (5) piece header	X	X	S	X	X	S	X	S	S	X	X	X	X	X	X	X	X	X
Profiled Header			X				X	X			X				X			X
Furniture Pegs	X	X		X	X		X			X	X	X	X	X	X	X	X	X
Regent Profile							X					X			X			X
Optional Edges																		
A Edge	X	X		X	X	S	X	S	X	X	X	X	X	X	X	X	X	X
Decorator Edge	X	X		X	X		X		S	X	X	X	X	X	X	X	X	X
F Edge	X	X		X	X		X		X	X	X	X	X	X	X	X	X	X
H Edge	X	X		X	X		X		X	S	S	X	S	S	X	X	X	X
L Edge	S	S		S	S		X		X	X	X	X	X	X	X	S	S	S
M Edge	X	X		X	X		X		X	X	X	X	X	X	X	X	X	X
Z2 Edge	X	X		X	X		S		X	X	X	S	X	X	S	X	X	X
Construction Information																		
Hinge Used																		
Concealed	X	X	X	X	X	X	X	X	X	X	X	X	X	X	X	X	X	X
Reveal Used																		
Modern	X	X	X	X	X	X	X	X	X	X	X	X	X	X	X	X	X	X
Traditional																		

S = Standard. The option comes standard with the door style.

❖ RUSTIC SPECIES

There is no upcharge for **Rustic Alder or Rustic Hickory**.

WALNUT

Upcharge 25%

STYLING OPTIONS

Option	Page
Bevel Pulls	S-35
Optional Edge	S-34
Finger Routes	S-35
Five (5) Piece Header	S-33
Furniture Pegs	S-35
Profiled Header	S-36
Regent Profile	S-36

HINGES

Hinges are described on page S-2.

REVEALS

Reveals are described on page S-29.

© Copyright StarMark Cabinetry FEBRUARY 2022

DOOR STYLE OPTIONS M-R: Availability by Door

Species and Style Options	Manhattan	Medina	Melbourne	Milan	Monroe	Oakley	Orian NEW!	Osprey NEW!	Overland	Peabody	Prescott	Princeton	Redcliff	Regal	Remington	Renwick NEW!	Richland NEW!	Ridgeville NEW!	Roanoke
	Doors																		
Species Options																			
Alder	X	X	X	X	X	X	X	X	X	X			X		X	X	X	X	X
Cherry	X	X	X	X	X	X	X	X	X	X	X	X	X	X	X	X	X	X	X
Hickory	X	X	X	X	X	X	X	X	X		X	X		X	X	X	X	X	X
Maple	X	X	X	X	X	X	X	X	X	X	X	X	X	X	X	X	X	X	X
Oak	X	X	X	X	X	X	X	X	X					X	X	X	X	X	X
Quarter Sawn Oak															X				
Rustic Alder ❖	X	X	X	X				X	X	X			X		X	X	X	X	X
Rustic Hickory ❖																			
Walnut	X	X	X	X														X	X
Styling Options																			
Bevel Pulls																			
Finger Routes																			
Five (5) piece header	X	X	X	X		X	X	X	X	S	S	S	S	S	X	X	X	X	X
Profiled Header			X							X	X		X					X	
Furniture Pegs	X	X	X	X		X	X	X	X						X	X	X	X	X
Regent Profile		X	X													X	X	X	X
Optional Edges																			
A Edge	X	X	X	X	X	X	X	X	X						X	X	X	X	X
Decorator Edge	X	X	X	X	X	X	X	X	X						X	X	X	X	X
F Edge	X	X	X	X	X	X	X	X	X						X	X	X	X	X
H Edge	X	X	X	X	X	X	X	X	X						X	X	X	X	X
L Edge	S	X	X	S	X	S	S	S	S						S	S	S	S	S
M Edge	X	X	X	X	S	X	X	X	X						X	X	X	X	X
Z2 Edge	X	S	S	X	X	X	X	X	X						X	X	X	X	X
Construction Information																			
Hinge Used																			
Concealed	X	X	X	X	X	X	X	X	X	X	X	X	X	X	X	X	X	X	X
Reveal Used																			
Modern	X	X	X	X	X	X	X	X	X	X	X	X	X	X	X	X	X	X	X
Traditional																			

S = Standard. The option comes standard with the door style.

❖ RUSTIC SPECIES

There is no upcharge for **Rustic Alder or Rustic Hickory**.

WALNUT

Upcharge 25%

STYLING OPTIONS

Option	Page
Bevel Pulls	S-35
Optional Edge	S-34
Finger Routes	S-35
Five (5) Piece Header	S-33
Furniture Pegs	S-35
Profiled Header	S-36
Regent Profile	S-36

HINGES

Hinges are described on page S-2.

REVEALS

Reveals are described on page S-29.

© Copyright StarMark Cabinetry FEBRUARY 2022

DOOR STYLE OPTIONS R-W: Availability by Door

Species and Style Options	Roman	Roseville	Salem	San Dimas	Stockton	Stratford	Sundance	Syracuse	Tabor	Taft	Tama (NEW!)	Tempo	Tipton	Tucson	Tudor	Vail (NEW!)	Valliant	Venice	Ventura	Verona	Viola	Waterfall	Waynesville	Westerly	Xavier
Species Options																									
Alder		X	X		X	X		X		X		X	X	X	X	X	X	X	X		X	X	X	X	X
Cherry	X	X	X	X	X	X	X	X	X	X		X	X	X	X	X	X	X	X	X	X	X	X	X	X
Hickory	X	X	X	X	X	X	X			X		X	X	X	X	X	X		X	X		X	X	X	X
Maple	X	X	X	X	X	X	X	X	X	X		X	X	X	X	X	X	X	X	X	X	X	X	X	X
Oak	X	X	X	X	X	X	X			X		X	X	X	X	X	X		X			X	X	X	X
Quarter Sawn Oak												X				X	X		X						X
Rustic Alder ❖		X	X		X	X		X		X			X	X	X	X	X	X	X		X	X	X	X	X
Rustic Hickory ❖															X										X
Walnut		X			X	X						X													
MDF											X														
Styling Options																									
Bevel Pulls			X												X										
Finger Routes			X												X										
Five (5) piece header	S	X	X	S	X	X	S	S		X			X	X	X	X	S	S	S	S	S	X	X	X	X
Profiled Header							X	X							X			X		X				X	
Furniture Pegs		X	X		X	X				X			X	X	X	X						X	X	X	X
Regent Profile		X	X		X	X				X			X	X	X										
Optional Edges																									
A Edge		X	X		X	X				X			X	X	X	X						X	X	X	X
Decorator Edge		X	X		X	X				X		X	X	X	X	X						X	X	X	X
F Edge		X	S		S	S				X		X	X	X	S	X						X	X	X	X
H Edge		X	X		X	X				X		X	X	X	X	X						X	X	X	X
L Edge		S	X		X	X			S	S	S	S	S	S	X	S	S		S	S		S	S	S	S
M Edge		X	X		X	X				X			X	X	X	X						X	X	X	X
Z2 Edge		X	X		X	X				X		X	X	X	X	X						X	X	X	X
Construction Information																									
Hinge Used																									
Concealed	X	X	X	X	X	X	X	X	X	X	X	X	X	X	X	X	X	X	X	X	X	X	X	X	X
Reveal Used																									
Modern	X	X		X	X	X	X	X	X	X	X	X	X	X		X	X	X	X	X	X	X	X	X	X
Traditional			X												X										

S = Standard. The option comes standard with the door style

NEW!

❖ RUSTIC SPECIES

There is no upcharge for **Rustic Alder or Rustic Hickory**.

WALNUT

Upcharge 25%

STYLING OPTIONS

Option	Page
Bevel Pulls	S-35
Optional Edge	S-34
Finger Routes	S-35
Five (5) Piece Header	S-33
Furniture Pegs	S-35
Profiled Header	S-36
Regent Profile	S-36

HINGES

Hinges are described on page S-2.

REVEALS

Reveals are described on page S-29.

© Copyright StarMark Cabinetry FEBRUARY 2022

MAPLE: Available Door Styles and Finishes

Maple door styles

- Abilene NEW!
- Accord
- Aero
- Alite
- Altamonte
- Anita NEW!
- Arlington
- Ashford
- Avendale
- Bedford
- Belfonte NEW!
- Bell Gardens
- Bethany
- Bonita
- Breckenridge
- Bridgeport
- Brisbane
- Calais
- Chappell NEW!
- Chesapeake NEW!
- Clifton NEW!
- Coralville
- Cosmopolitan
- Edgemore NEW!
- Edinburgh NEW!
- Ellington
- Farmington
- Fullerton
- Gallant
- Georgetown
- Glendale
- Griffon
- Hampton
- Hanover
- Harbor
- Harrison
- Hudson
- Huntingford
- Laguna
- Lancaster
- Lehigh
- Manhattan
- Medina
- Melbourne
- Milan
- Monroe
- Oakley
- Orian
- Osprey NEW!
- Overland NEW!
- Peabody
- Prescott
- Princeton
- Redcliff
- Remington NEW!
- Renwick NEW!
- Richland NEW!
- Regal
- Ridgeville
- Roanoke
- Roman
- Roseville
- Salem
- San Dimas
- Stockton
- Stratford
- Sundance
- Syracuse
- Tabor
- Taft
- Tempo
- Tipton
- Tucson
- Tudor
- Vail NEW!
- Valliant
- Venice
- Ventura
- Verona
- Viola
- Waterfall
- Waynesville
- Westerly
- Xavier NEW!

All Maple door styles are available with any of the stain finishes listed below:

- Butterscotch
- Butterscotch Chocolate▲
- Cappuccino
- Cappuccino Chocolate▲
- Chestnut
- Honey
- Honey Chocolate▲
- Mocha
- Mocha Ebony▲
- Natural
- Oregano
- Oregano Chocolate▲
- Slate
- Slate Chocolate▲
- Slate Ebony▲
- Slate Nickel
- Tarragon NEW!
- Tarragon Chocolate▲ NEW!
- Tarragon Ebony▲ NEW!
- Unfinished

▲Finishes available with Old World Distressing

COTTAGE STAIN WITH GLAZE
Upcharge 15%

GLAZING
Upcharge 10%

LIGHT CHAIN DISTRESSING
Upcharge 10%

SPATTERING
Upcharge 10%

There is no upcharge for Spattering on a Stain with Glaze.

OLD WORLD DISTRESSING
Upcharge 15%

MATTE TOP COAT NEW!
Upcharge 10%

There is no upcharge for Matte Top Coat on a Stain with Glaze.

© Copyright StarMark Cabinetry FEBRUARY 2022

MAPLE: Available Door Styles and Finishes

Maple door styles

- Abilene NEW!
- Accord
- Aero
- Alite
- Altamonte
- Anita NEW!
- Arlington
- Ashford
- Avendale
- Bedford
- Belfonte NEW!
- Bell Gardens
- Bethany
- Bonita
- Breckenridge
- Bridgeport
- Brisbane
- Calais
- Chappell NEW!
- Chesapeake NEW!
- Clifton NEW!
- Coralville
- Cosmopolitan
- Edgemore NEW!
- Edinburgh NEW!
- Ellington
- Farmington
- Fullerton
- Gallant
- Georgetown
- Glendale
- Griffon
- Hampton
- Hanover
- Harbor
- Harrison
- Hudson
- Huntingford
- Laguna
- Lancaster
- Lehigh
- Manhattan
- Medina
- Melbourne
- Milan
- Monroe
- Oakley
- Orian
- Osprey NEW!
- Overland NEW!
- Peabody
- Prescott
- Princeton
- Redcliff
- Remington NEW!
- Renwick NEW!
- Richland NEW!
- Regal
- Ridgeville
- Roanoke
- Roman
- Roseville
- Salem
- San Dimas
- Stockton
- Stratford
- Sundance
- Syracuse
- Tabor
- Taft
- Tempo
- Tipton
- Tucson
- Tudor
- Vail NEW!
- Valliant
- Venice
- Ventura
- Verona
- Viola
- Waterfall
- Waynesville
- Westerly
- Xavier

All Maple door styles are available with any of the Tinted Varnish finishes listed below:

- Black
- Blueberry
- Blueberry Chocolate▲
- Blueberry Ebony▲
- Bottle Green NEW!
- Breeze
- Breeze Chocolate▲
- Breeze Ebony▲
- Buttercream
- Buttercream Chocolate▲
- Capri
- Capri Chocolate▲
- Capri Ebony▲
- Creekstone NEW!
- Crystal Fog
- Crystal Fog Chocolate▲
- Currant NEW!
- Dove
- Dove Chocolate▲
- Dove Latte
- Dove Nickel
- Frost
- Frost Chocolate▲
- Frost Ebony▲
- Graphite
- Graphite Chocolate▲
- Graphite Ebony▲
- Ivory Cream
- Ivory Cream Chocolate▲
- Macadamia
- Macadamia Chocolate▲
- Macadamia Latte
- Marshmallow Cream
- Marshmallow Cream Chocolate▲
- Marshmallow Cream Latte
- Marshmallow Cream Nickel
- Mineral Gray NEW!
- Moon Bay NEW!
- Moss Green
- Moss Green Chocolate▲
- Mushroom
- Mushroom Chocolate▲
- Pearl
- Pearl Chocolate▲
- Pebble Gray NEW!
- Peppercorn
- Peppercorn Chocolate▲
- Peppercorn Ebony▲
- Portabella
- Portabella Chocolate▲
- Portabella Ebony▲
- Repose Grey
- Repose Grey Chocolate▲
- Repose Grey Ebony▲
- Sage
- Sage Chocolate▲
- Sage Ebony▲
- Shale
- Shale Chocolate▲
- Shale Ebony▲
- Simply White NEW!
- Stone
- Stone Chocolate▲
- Stone Ebony▲
- White
- White Chocolate▲
- White Latte
- White Nickel
- Wild Honey NEW!
- Wings NEW!

Specialty

- Amaretto▲
- Villa Black*
- Villa Breeze Ebony* NEW!
- Villa Capri Ebony* NEW!
- Villa Green*
- Villa Ivory*
- Villa Marshmallow*
- Villa Marshmallow Nickel*
- Villa Mushroom*
- Villa Pearl*

* The Xavier door style is not available in the Villa finish.
▲Finishes available with Old World Distressing

FINISH UPCHARGES

Tinted Varnish	5%
Tinted Varnish with Glaze	15%
Amaretto	15%
Villa	15%

LIGHT CHAIN DISTRESSING

Upcharge 10%

There is no upcharge for Light Chain Distressing on Tinted Varnish with Glaze.

OLD WORLD DISTRESSING

Upcharge 15%

COTTAGE TINTED VARNISH WITH GLAZE

Upcharge 15%

! A sample door is the best way to illustrate Specialty finish characteristics. We encourage you to order a 13x16 sample door or FF&D sample door.

© Copyright StarMark Cabinetry FEBRUARY 2022

▲OLD WORLD DISTRESSING: Available Maple Door Styles and Finishes

Maple door styles

- Abilene NEW!
- Accord
- Aero
- Alite
- Altamonte
- Anita NEW!
- Arlington
- Ashford
- Avendale
- Bedford
- Belfonte NEW!
- Bell Gardens
- Bethany
- Bonita
- Breckenridge
- Bridgeport
- Brisbane
- Calais
- Chappell NEW!
- Chesapeake NEW!
- Clifton NEW!
- Coralville
- Cosmopolitan
- Edgemore NEW!
- Edinburgh NEW!
- Ellington
- Farmington
- Fullerton
- Gallant
- Georgetown
- Glendale
- Griffon
- Hampton
- Hanover
- Harbor
- Harrison
- Hudson
- Huntingford
- Laguna
- Lancaster
- Lehigh
- Manhattan
- Medina
- Melbourne
- Milan
- Monroe
- Oakley
- Orian
- Osprey NEW!
- Overland NEW!
- Peabody
- Prescott
- Princeton
- Redcliff
- Remington NEW!
- Renwick NEW!
- Richland NEW!
- Regal
- Ridgeville
- Roanoke
- Roman
- Roseville
- Salem
- San Dimas
- Stockton
- Stratford
- Sundance
- Syracuse
- Tabor
- Taft
- Tempo
- Tipton
- Tucson
- Tudor
- Vail NEW!
- Valliant
- Venice
- Ventura
- Verona
- Viola
- Waterfall
- Waynesville
- Westerly
- Xavier

All Maple door styles are available with Old World Distressing on any of the finishes listed below:

- Blueberry Chocolate
- Blueberry Ebony
- Breeze Chocolate
- Breeze Ebony
- Buttercream Chocolate
- Butterscotch Chocolate
- Cappuccino Chocolate
- Capri Chocolate
- Capri Ebony
- Crystal Fog Chocolate
- Dove Chocolate
- Frost Chocolate
- Frost Ebony
- Graphite Chocolate
- Graphite Ebony
- Honey Chocolate
- Ivory Cream Chocolate
- Macadamia Chocolate
- Marshmallow Cream Chocolate
- Mocha Ebony
- Moss Green Chocolate
- Mushroom Chocolate
- Oregano Chocolate
- Pearl Chocolate
- Peppercorn Chocolate
- Peppercorn Ebony
- Portabella Chocolate
- Portabella Ebony
- Repose Grey Chocolate
- Repose Grey Ebony
- Sage Chocolate
- Sage Ebony
- Shale Chocolate
- Shale Ebony
- Slate Chocolate
- Slate Ebony
- Stone Chocolate
- Stone Ebony
- Tarragon Chocolate NEW!
- Tarragon Ebony NEW!
- White Chocolate

Specialty

- Amaretto

! A sample door is the best way to illustrate Specialty finish characteristics. We encourage you to order a 13x16 sample door or FF&D sample door.

Old World Distressing is created by randomly applying several distressing techniques, softening all edges, and adding a glaze to accentuate the distressing. A clear top coat is applied. The finish is oven-cured for durability.

TECHNIQUES USED

No additions or deletions allowed:

- Dips
- Light Chain Distressing
- Knife Cuts
- Rasping
- Rounded Corners
- Worm Holes
- Worn Edges
- No Spattering

MATTE TOP COAT NEW!

Matte Top Coat is available on Stain with Glaze combinations with Old World Distressing. There is no upcharge for the Matte Top Coat when applied on Old World Distressing. The Old World Distressing upcharge still applies.

OLD WORLD DISTRESSING

Upcharge 15%

This upcharge is inclusive of all other upcharges associated with the finish you select. For example, when you specify Old World Distressing for Amaretto, the upcharge is 15%. It will not be 15% for Old World Distressing plus 15% for Amaretto.

© Copyright StarMark Cabinetry FEBRUARY 2022

CHERRY: Available Door Styles and Finishes

Cherry door styles

- Abilene NEW!
- Accord
- Aero
- Alite
- Altamonte
- Anita NEW!
- Arlington
- Ashford
- Avendale
- Bedford
- Belfonte NEW!
- Bell Gardens
- Bethany
- Bonita
- Breckenridge
- Bridgeport
- Brisbane
- Calais
- Chappell NEW!
- Chesapeake NEW!
- Clifton NEW!
- Coralville
- Cosmopolitan
- Edgemore NEW!
- Edinburgh NEW!
- Ellington
- Farmington
- Fullerton
- Gallant
- Georgetown
- Glendale
- Griffon
- Hampton
- Hanover
- Harbor
- Harrison
- Hudson
- Huntingford
- Laguna
- Lancaster
- Lehigh
- Manhattan
- Medina
- Melbourne
- Milan
- Monroe
- Oakley
- Orian
- Osprey NEW!
- Overland NEW!
- Peabody
- Prescott
- Princeton
- Redcliff
- Regal
- Remington NEW!
- Renwick NEW!
- Richland NEW!
- Ridgeville
- Roanoke
- Roman
- Roseville
- Salem
- San Dimas
- Stockton
- Stratford
- Sundance
- Syracuse
- Tabor
- Taft
- Tempo
- Tipton
- Tucson
- Tudor
- Vail NEW!
- Valliant
- Venice
- Ventura
- Verona
- Viola
- Waterfall
- Waynesville
- Westerly
- Xavier

All Cherry door styles are available with any of the stain finishes listed below:

- Brittany
- Brittany Chocolate▲
- Brittany Ebony▲
- Butterscotch
- Butterscotch Chocolate▲
- Butterscotch Ebony▲
- Cappuccino
- Cappuccino Chocolate▲
- Carbon NEW!
- Chestnut
- Chestnut Ebony▲
- Driftwood
- Driftwood Chocolate▲
- Driftwood Ebony▲
- Harvest
- Harvest Chocolate▲
- Harvest Ebony▲
- Hazelnut
- Hazelnut Ebony▲
- Java
- Mocha
- Mocha Ebony▲
- Natural
- Natural Chocolate▲
- Nutmeg
- Nutmeg Chocolate▲
- Nutmeg Ebony▲
- Oregano
- Oregano Chocolate▲
- Oregano Ebony▲
- Rattan
- Rattan Chocolate▲
- Rattan Ebony▲
- Rye
- Rye Ebony▲
- Slate
- Slate Chocolate▲
- Slate Ebony▲
- Slate Nickel
- Tarragon
- Tarragon Chocolate▲
- Tarragon Ebony▲
- Toffee
- Toffee Chocolate▲
- Toffee Ebony▲
- Unfinished

Specialty

- Chateaux Brittany
- Chateaux Cappuccino
- Chateaux Nutmeg
- Chateaux Oregano
- Chateaux Toffee

▲Finishes available with Old World Distressing

COTTAGE STAIN WITH GLAZE
Upcharge 15%

GLAZING
Upcharge 10%

LIGHT CHAIN DISTRESSING
Upcharge 10%

OLD WORLD DISTRESSING
Upcharge 15%

CHATEAUX
Upcharge 15%

SPATTERING
Upcharge 10%

There is no upcharge for Spattering on a Stain with Glaze.

MATTE TOP COAT NEW!
Upcharge 10%

There is no upcharge for Matte Top Coat on a Stain with Glaze or on Chateaux.

! A sample door is the best way to illustrate Specialty finish characteristics. We encourage you to order a 13x16 sample door or FF&D sample door.

© Copyright StarMark Cabinetry FEBRUARY 2022

▲OLD WORLD DISTRESSING: Available Cherry Door Styles and Finishes

Cherry door styles

- Abilene NEW!
- Accord
- Aero
- Alite
- Altamonte
- Anita NEW!
- Arlington
- Ashford
- Avendale
- Bedford
- Belfonte NEW!
- Bell Gardens
- Bethany
- Bonita
- Breckenridge
- Bridgeport
- Brisbane
- Calais
- Chappell NEW!
- Chesapeake NEW!
- Clifton NEW!
- Coralville
- Cosmopolitan
- Edgemore NEW!
- Edinburgh NEW!
- Ellington
- Farmington
- Fullerton
- Gallant
- Georgetown
- Glendale
- Griffon
- Hampton
- Hanover
- Harbor
- Harrison
- Hudson
- Huntingford
- Laguna
- Lancaster
- Lehigh
- Manhattan
- Medina
- Melbourne
- Milan
- Monroe
- Oakley
- Orian
- Osprey NEW!
- Overland NEW!
- Peabody
- Prescott
- Princeton
- Redcliff
- Regal
- Remington NEW!
- Renwick NEW!
- Richland NEW!
- Ridgeville
- Roanoke
- Roman
- Roseville
- Salem
- San Dimas
- Stockton
- Stratford
- Sundance
- Syracuse
- Tabor
- Taft
- Tempo
- Tipton
- Tucson
- Tudor
- Vail NEW!
- Valliant
- Venice
- Ventura
- Verona
- Viola
- Waterfall
- Waynesville
- Westerly
- Xavier

All Cherry door styles are available with Old World Distressing on any of the finishes listed below:

- Brittany Chocolate
- Brittany Ebony
- Butterscotch Chocolate
- Butterscotch Ebony
- Cappuccino Chocolate
- Chestnut Ebony
- Driftwood Chocolate
- Driftwood Ebony
- Harvest Chocolate
- Harvest Ebony
- Hazelnut Ebony
- Mocha Ebony
- Natural Chocolate
- Nutmeg Chocolate
- Nutmeg Ebony
- Oregano Chocolate
- Oregano Ebony
- Rattan Chocolate
- Rattan Ebony
- Rye Ebony
- Slate Chocolate
- Slate Ebony
- Tarragon Chocolate
- Tarragon Ebony
- Toffee Chocolate
- Toffee Ebony

Old World Distressing is created by randomly applying several distressing techniques, softening all edges, and adding a glaze to accentuate the distressing. A clear top coat is applied. The finish is oven-cured for durability.

TECHNIQUES USED

No additions or deletions allowed:

- Dips
- Light Chain Distressing
- Knife Cuts
- Rasping
- Rounded Corners
- Worm Holes
- Worn Edges
- No Spattering

OLD WORLD DISTRESSING

Upcharge	15%

MATTE TOP COAT NEW!

Upcharge	10%

There is no upcharge for Matte Top Coat on Old World Distressing.

© Copyright StarMark Cabinetry FEBRUARY 2022

HICKORY: Available Door Styles and Finishes

Hickory and Rustic Hickory❖ door styles

Abilene NEW!	Hanover	Salem
Accord ❖	Harbor	San Dimas
Aero	Harrison	Stockton
Alite ❖	Hudson	Stratford
Anita NEW!	Huntingford	Sundance
Ashford	Laguna	Taft
Avendale	Lancaster	Tempo
Bedford	Lehigh	Tipton
Belfonte NEW!	Manhattan	Tucson
Bethany	Medina	Tudor ❖
Bonita	Melbourne	Vail NEW!
Breckenridge ❖	Milan	Valliant
Bridgeport	Monroe	Ventura
Brisbane	Oakley	Verona
Calais	Orian	Waterfall
Chappell NEW!	Osprey NEW!	Waynesville
Chesapeake NEW!	Overland NEW!	Westerly
Clifton NEW!	Prescott	Xavier ❖
Coralville	Princeton	
Cosmopolitan	Regal	
Edgemore NEW!	Remington NEW!	
Edinburgh NEW!	Renwick NEW!	
Farmington	Richland NEW!	
Fullerton ❖	Ridgeville	
Georgetown ❖	Roanoke	
Griffon	Roman	
Hampton	Roseville	

All Hickory and Rustic Hickory door styles are available with any of the stain finishes listed below:

Cappuccino
Cappuccino Chocolate▲
Chestnut
Driftwood
Driftwood Chocolate▲
Driftwood Ebony▲
Harvest
Harvest Chocolate▲
Honey
Honey Chocolate▲
Mocha
Mocha Ebony▲
Natural
Natural Chocolate▲
Nutmeg
Nutmeg Chocolate▲
Oregano
Oregano Chocolate▲
Slate
Slate Chocolate▲
Slate Ebony▲
Slate Nickel
Tarragon NEW!
Tarragon Chocolate▲ NEW!
Tarragon Ebony▲ NEW!
Toffee
Toffee Chocolate▲
Unfinished

▲Finishes available with Old World Distressing

❖ RUSTIC HICKORY

Doors marked with ❖ are available in Rustic Hickory. There is no upcharge for Rustic Hickory.

COTTAGE STAIN WITH GLAZE

Upcharge 15%

GLAZING

Upcharge 10%

OLD WORLD DISTRESSING

Upcharge 15%

LIGHT CHAIN DISTRESSING

Upcharge 10%

SPATTERING

Upcharge 10%

There is no upcharge for Spattering on a Stain with Glaze.

MATTE TOP COAT NEW!

Upcharge 5%

There is no upcharge for Matte Top Coat on a Stain with Glaze.

© Copyright StarMark Cabinetry FEBRUARY 2022

▲OLD WORLD DISTRESSING: Available Hickory Door Styles and Finishes

Hickory and Rustic Hickory❖ door styles

- Abilene NEW!
- Accord ❖
- Aero
- Alite ❖
- Anita NEW!
- Ashford
- Avendale
- Bedford
- Belfonte NEW!
- Bethany
- Bonita
- Breckenridge ❖
- Bridgeport
- Brisbane
- Calais
- Chappell NEW!
- Chesapeake NEW!
- Clifton NEW!
- Coralville
- Cosmopolitan
- Edgemore NEW!
- Edinburgh NEW!
- Farmington
- Fullerton ❖
- Georgetown ❖
- Griffon
- Hampton
- Hanover
- Harbor
- Harrison
- Hudson
- Huntingford
- Laguna
- Lancaster
- Lehigh
- Manhattan
- Medina
- Melbourne
- Milan
- Monroe
- Oakley
- Orian
- Osprey NEW!
- Overland NEW!
- Prescott
- Princeton
- Regal
- Remington NEW!
- Renwick NEW!
- Richland NEW!
- Ridgeville
- Roanoke
- Roman
- Roseville
- Salem
- San Dimas
- Stockton
- Stratford
- Sundance
- Taft
- Tempo
- Tipton
- Tucson
- Tudor ❖
- Vail NEW!
- Valliant
- Ventura
- Verona
- Waterfall
- Waynesville
- Westerly
- Xavier ❖

All Hickory and Rustic Hickory door styles are available with Old World Distressing on any of the finishes listed below:

- Cappuccino Chocolate
- Driftwood Chocolate
- Driftwood Ebony
- Harvest Chocolate
- Honey Chocolate
- Mocha Ebony
- Natural Chocolate
- Nutmeg Chocolate
- Oregano Chocolate
- Slate Chocolate
- Slate Ebony
- Tarragon Chocolate NEW!
- Tarragon Ebony NEW!
- Toffee Chocolate

Old World Distressing is created by randomly applying several distressing techniques, softening all edges, and adding a glaze to accentuate the distressing. A clear top coat is applied. The finish is oven-cured for durability.

TECHNIQUES USED

No additions or deletions allowed:

- Dips
- Light Chain Distressing
- Knife Cuts
- Rasping
- Rounded Corners
- Worm Holes
- Worn Edges
- No Spattering

❖ RUSTIC HICKORY

Doors marked with ❖ are available in Rustic Hickory. There is no upcharge for Rustic Hickory.

OLD WORLD DISTRESSING

Upcharge 15%

MATTE TOP COAT NEW!

Upcharge 5%

There is no upcharge for Matte Top Coat on Old World Distressing.

© Copyright StarMark Cabinetry FEBRUARY 2022

Use Space for Notes

© Copyright StarMark Cabinetry FEBRUARY 2022

Use Space for Notes

© Copyright StarMark Cabinetry FEBRUARY 2022

ALDER: Available Door Styles and Finishes

Alder and Rustic Alder door styles

- Abilene ❖ NEW!
- Accord ❖
- Aero
- Alite ❖
- Altamonte ❖
- Anita ❖ NEW!
- Arlington ❖
- Ashford ❖
- Avendale ❖
- Bedford ❖
- Belfonte ❖ NEW!
- Bell Gardens ❖
- Bonita ❖
- Breckenridge ❖
- Bridgeport ❖
- Chappell ❖ NEW!
- Chesapeake❖ NEW!
- Clifton ❖ NEW!
- Coralville ❖
- Cosmopolitan ❖
- Edgemore ❖ NEW!
- Edinburgh ❖ NEW!
- Ellington ❖
- Farmington ❖
- Fullerton ❖
- Georgetown ❖
- Hampton
- Hanover ❖
- Harbor ❖
- Harrison ❖
- Hudson ❖
- Huntingford
- Laguna ❖
- Lancaster ❖
- Lehigh ❖
- Manhattan ❖
- Medina ❖
- Melbourne ❖
- Milan ❖
- Monroe
- Oakley
- Orian
- Osprey ❖ NEW!
- Overland ❖ NEW!
- Peabody ❖
- Redcliff ❖
- Remington ❖ NEW!
- Renwick ❖ NEW!
- Richland ❖ NEW!
- Ridgeville ❖
- Roanoke ❖
- Roseville ❖
- Salem ❖
- Stockton❖
- Stratford ❖
- Syracuse ❖
- Taft ❖
- Tempo
- Tipton ❖
- Tucson ❖
- Tudor ❖
- Vail ❖ NEW!
- Valliant ❖
- Venice ❖
- Ventura ❖
- Viola ❖
- Waterfall ❖
- Waynesville ❖
- Westerly ❖
- Xavier ❖

All Alder and Rustic Alder door styles are available with any of the finishes listed below:

- Brittany
- Brittany Chocolate▲
- Brittany Ebony▲
- Butterscotch
- Butterscotch Chocolate▲
- Butterscotch Ebony▲
- Cappuccino
- Cappuccino Chocolate▲
- Carbon NEW!
- Chestnut
- Chestnut Ebony▲
- Driftwood
- Driftwood Chocolate▲
- Driftwood Ebony▲
- Harvest
- Harvest Chocolate▲
- Harvest Ebony▲
- Hazelnut
- Hazelnut Ebony▲
- Java
- Mocha
- Mocha Ebony▲
- Natural
- Natural Chocolate▲
- Nutmeg
- Nutmeg Chocolate▲
- Nutmeg Ebony▲
- Oregano
- Oregano Chocolate▲
- Oregano Ebony▲
- Rattan
- Rattan Chocolate▲
- Rattan Ebony▲
- Rye
- Rye Ebony▲
- Slate
- Slate Chocolate▲
- Slate Ebony▲
- Slate Nickel
- Tarragon
- Tarragon Chocolate▲
- Tarragon Ebony▲
- Toffee
- Toffee Chocolate▲
- Toffee Ebony▲
- Unfinished

Specialty

- Antiquity Driftwood
- Antiquity Fog
- Antiquity Oregano
- Antiquity Peppercorn
- Antiquity Slate

▲Finishes available with Old World Distressing

❖ RUSTIC ALDER

Doors marked with ❖ are available in Rustic Alder. There is no upcharge for Rustic Alder.

COTTAGE STAIN WITH GLAZE

Upcharge	15%

GLAZING

Upcharge	10%

LIGHT CHAIN DISTRESSING

Upcharge	10%

SPATTERING

Upcharge	10%

There is no upcharge for Spattering on a Stain with Glaze.

OLD WORLD DISTRESSING

Upcharge	15%

ANTIQUITY

Upcharge	15%

MATTE TOP COAT NEW!

Upcharge	5%

There is no upcharge for Matte Top Coat on a Stain with Glaze or on Antiquity Driftwood, Oregano or Slate.

! A sample door is the best way to illustrate Specialty finish characteristics. We encourage you to order a 13x16 sample door or FF&D sample door.

© Copyright StarMark Cabinetry FEBRUARY 2022

▲OLD WORLD DISTRESSING: Available Alder Door Styles and Finishes

Alder and Rustic Alder door styles

- Abilene ❖ NEW!
- Accord ❖
- Aero
- Alite ❖
- Altamonte ❖
- Anita ❖ NEW!
- Arlington ❖
- Ashford ❖
- Avendale ❖
- Bedford ❖
- Belfonte ❖ NEW!
- Bell Gardens ❖
- Bonita ❖
- Breckenridge ❖
- Bridgeport ❖
- Chappell ❖ NEW!
- Chesapeake❖ NEW!
- Clifton ❖ NEW!
- Coralville ❖
- Cosmopolitan ❖
- Edgemore ❖ NEW!
- Edinburgh ❖ NEW!
- Ellington ❖
- Farmington ❖
- Fullerton ❖
- Georgetown ❖
- Hampton
- Hanover ❖
- Harbor ❖
- Harrison ❖
- Hudson ❖
- Huntingford
- Laguna ❖
- Lancaster ❖
- Lehigh ❖
- Manhattan ❖
- Medina ❖
- Melbourne ❖
- Milan ❖
- Monroe
- Oakley
- Orian
- Osprey ❖ NEW!
- Overland ❖ NEW!
- Peabody ❖
- Redcliff ❖
- Remington ❖ NEW!
- Renwick ❖ NEW!
- Richland ❖ NEW!
- Ridgeville ❖
- Roanoke ❖
- Roseville ❖
- Salem ❖
- Stockton ❖
- Stratford ❖
- Syracuse ❖
- Taft ❖
- Tempo
- Tipton ❖
- Tucson ❖
- Tudor ❖
- Vail ❖ NEW!
- Valliant ❖
- Venice ❖
- Ventura ❖
- Viola ❖
- Waterfall ❖
- Waynesville ❖
- Westerly ❖
- Xavier ❖

All Alder and Rustic Alder door styles are available with Old World Distressing on any of the finishes listed below:

- Brittany Chocolate
- Brittany Ebony
- Butterscotch Chocolate
- Butterscotch Ebony
- Cappuccino Chocolate
- Chestnut Ebony
- Driftwood Chocolate
- Driftwood Ebony
- Harvest Chocolate
- Harvest Ebony
- Hazelnut Ebony
- Mocha Ebony
- Natural Chocolate
- Nutmeg Chocolate
- Nutmeg Ebony
- Oregano Chocolate
- Oregano Ebony
- Rattan Chocolate
- Rattan Ebony
- Rye Ebony
- Slate Chocolate
- Slate Ebony
- Tarragon Chocolate
- Tarragon Ebony
- Toffee Chocolate
- Toffee Ebony

Old World Distressing is created by randomly applying several distressing techniques, softening all edges, and adding a glaze to accentuate the distressing. A clear top coat is applied. The finish is oven-cured for durability.

TECHNIQUES USED

No additions or deletions allowed:

- Dips
- Light Chain Distressing
- Knife Cuts
- Rasping
- Rounded Corners
- Worm Holes
- Worn Edges
- No Spattering

OLD WORLD DISTRESSING

Upcharge 15%

MATTE TOP COAT NEW!

Upcharge 5%

There is no upcharge for Matte Top Coat on Old World Distressing.

© Copyright StarMark Cabinetry FEBRUARY 2022

HOMESTEAD: Available Alder Door Styles and Finishes

Alder and Rustic Alder door styles

- Abilene ❖ NEW!
- Accord ❖
- Alite ❖
- Altamonte ❖
- Arlington ❖
- Avendale ❖
- Belfonte ❖ NEW!
- Bell Gardens ❖
- Bonita ❖
- Breckenridge ❖
- Chappell ❖ NEW!
- Clifton ❖ NEW!
- Coralville ❖
- Edgemore ❖ NEW!
- Ellington ❖
- Fullerton ❖
- Georgetown ❖
- Hampton
- Hanover ❖
- Harrison ❖
- Huntingford
- Laguna ❖
- Lehigh ❖
- Manhattan ❖
- Medina ❖
- Melbourne ❖
- Orian
- Osprey ❖ NEW!
- Peabody ❖
- Redcliff ❖
- Remington ❖ NEW!
- Renwick ❖ NEW!
- Ridgeville ❖
- Roanoke ❖
- Stockton❖
- Syracuse ❖
- Tipton ❖
- Tucson ❖
- Tudor ❖
- Vail ❖ NEW!
- Venice ❖
- Ventura ❖
- Viola ❖
- Waterfall ❖
- Westerly ❖
- Xavier ❖

Select Alder and Rustic Alder door styles are available with any of the stain finishes listed below:

Specialty

- Homestead Blueberry NEW!
- Homestead Fog

❖ RUSTIC ALDER

Doors marked with ❖ are available in Rustic Alder. There is no upcharge for Rustic Alder.

HOMESTEAD

Upcharge	15%

Homestead is available on Alder and Rustic Alder. Several distressing techniques are applied randomly and heavily. A glaze is applied, wiped and brushed. Drawer and door corners are rounded. A clear top coat is applied. This finish is oven cured for durability.

TECHNIQUES USED

No additions or deletions allowed:

- Dips
- Chiseling
- Light Chain Distressing
- Knife Cuts
- Rasping
- Rounded Corners
- Abundant Worm Holes
- Worn Edges
- No Spattering

© Copyright StarMark Cabinetry FEBRUARY 2022

OAK: Available Door Styles and Finishes

Oak door styles

Abilene NEW!	Laguna	Ventura ■
Accord ■	Lancaster	Waterfall
Aero	Lehigh ■	Waynesville
Alite	Manhattan	Westerly
Anita NEW!	Medina	Xavier
Ashford	Melbourne	
Avendale	Milan	
Bedford	Monroe	
Belfonte NEW!	Oakley	
Bethany	Orian	
Bonita ■	Osprey NEW!	
Breckenridge ■	Overland NEW!	
Bridgeport	Regal	
Brisbane	Remington NEW!	
Chappell NEW!	Renwick ■ NEW!	
Chesapeake NEW!	Richland NEW!	
Clifton ■ NEW!	Ridgeville ■	
Coralville ■	Roanoke ■	
Cosmopolitan	Roman	
Edgemore NEW!	Roseville	
Edinburgh NEW!	Salem	
Farmington	San Dimas	
Fullerton ■	Stockton ■	
Georgetown	Stratford	
Griffon	Sundance	
Hampton	Taft	
Hanover ■	Tempo	
Harbor	Tipton ■	
Harrison ■	Tucson	
Hudson	Tudor	
Huntingford	Vail NEW!	
	Valliant	

■ Door styles available in Weathered

All Oak door styles are available with any of the stain finishes listed below:

Cappuccino	Slate
Cappuccino Chocolate▲	Slate Chocolate▲
Chestnut	Slate Ebony▲
Driftwood	Slate Nickel
Driftwood Chocolate▲	Tarragon
Driftwood Ebony▲	Tarragon Chocolate▲
Harvest	Tarragon Ebony▲
Harvest Chocolate▲	Toffee
Hazelnut	Toffee Chocolate▲
Hazelnut Ebony▲	Unfinished
Honey	
Honey Chocolate▲	
Java	
Mocha	
Mocha Ebony▲	
Natural	
Natural Chocolate▲	
Nutmeg	
Nutmeg Chocolate▲	
Oregano	
Oregano Chocolate▲	
Rye	
Rye Ebony▲	

▲Finishes available with Old World Distressing

Weathered is available on all of the stain and stain with glaze finishes listed above.

COTTAGE STAIN WITH GLAZE
Upcharge 15%

GLAZING
Upcharge 10%

LIGHT CHAIN DISTRESSING
Upcharge 10%

OLD WORLD DISTRESSING
Upcharge 15%

WEATHERED NEW!
Upcharge 15%

SPATTERING
Upcharge 10%

There is no upcharge for Spattering on a Stain with Glaze.

MATTE TOP COAT NEW!
Upcharge 5%

There is no upcharge for Matte Top Coat on a Stain with Glaze.

© Copyright StarMark Cabinetry FEBRUARY 2022

OAK: Available Door Styles and Finishes

Oak door styles

- Abilene NEW!
- Accord ■
- Aero
- Alite
- Anita NEW!
- Ashford
- Avendale
- Bedford
- Belfonte NEW!
- Bethany
- Bonita ■
- Breckenridge ■
- Bridgeport
- Brisbane
- Chappell NEW!
- Chesapeake NEW!
- Clifton ■ NEW!
- Coralville ■
- Cosmopolitan
- Edgemore NEW!
- Edinburgh NEW!
- Farmington
- Fullerton ■
- Georgetown
- Griffon
- Hampton
- Hanover ■
- Harbor
- Harrison ■
- Hudson
- Huntingford
- Laguna
- Lancaster
- Lehigh ■
- Manhattan
- Medina
- Melbourne
- Milan
- Monroe
- Oakley
- Orian
- Osprey NEW!
- Overland NEW!
- Regal
- Remington NEW!
- Renwick ■ NEW!
- Richland NEW!
- Ridgeville ■
- Roanoke ■
- Roman
- Roseville
- Salem
- San Dimas
- Stockton ■
- Stratford
- Sundance
- Taft
- Tempo
- Tipton ■
- Tucson
- Tudor
- Vail NEW!
- Valliant
- Ventura ■
- Waterfall
- Waynesville
- Westerly
- Xavier

■ Door styles available in Weathered

All Oak door styles are available with any of the Tinted Varnish finishes listed below:

- Black
- Blueberry
- Blueberry Chocolate▲
- Blueberry Ebony▲
- Bottle Green NEW!
- Breeze
- Breeze Chocolate▲
- Breeze Ebony▲
- Buttercream
- Buttercream Chocolate▲
- Capri
- Capri Chocolate▲
- Capri Ebony▲
- Creekstone NEW!
- Crystal Fog
- Crystal Fog Chocolate▲
- Currant NEW!
- Dove
- Dove Chocolate▲
- Dove Latte
- Dove Nickel
- Frost
- Frost Chocolate▲
- Frost Ebony▲
- Graphite
- Graphite Chocolate▲
- Graphite Ebony▲
- Ivory Cream
- Ivory Cream Chocolate▲
- Macadamia
- Macadamia Chocolate▲
- Macadamia Latte
- Marshmallow Cream
- Marshmallow Cream Chocolate▲
- Marshmallow Cream Latte
- Marshmallow Cream Nickel
- Mineral Gray NEW!
- Moon Bay NEW!
- Moss Green
- Moss Green Chocolate▲
- Mushroom
- Mushroom Chocolate▲
- Pearl
- Pearl Chocolate▲
- Pebble Gray NEW!
- Peppercorn
- Peppercorn Chocolate▲
- Peppercorn Ebony▲
- Portabella
- Portabella Chocolate▲
- Portabella Ebony▲
- Repose Grey
- Repose Grey Chocolate▲
- Repose Grey Ebony▲
- Sage
- Sage Chocolate▲
- Sage Ebony▲
- Shale
- Shale Chocolate▲
- Shale Ebony▲
- Simply White NEW!
- Stone
- Stone Chocolate▲
- Stone Ebony▲
- White
- White Chocolate▲
- White Latte
- White Nickel
- Wild Honey NEW!
- Wings NEW!

▲Finishes available with Old World Distressing

Weathered is available on all of the Tinted Varnish finishes listed above.

FINISH UPCHARGES

Tinted Varnish	5%
Tinted Varnish with Glaze	15%

LIGHT CHAIN DISTRESSING

Upcharge	10%

There is no upcharge for Light Chain Distressing on Tinted Varnish with Glaze.

OLD WORLD DISTRESSING

Upcharge	15%

COTTAGE TINTED VARNISH WITH GLAZE

Upcharge	15%

! A sample door is the best way to illustrate Specialty finish characteristics. We encourage you to order a 13x16 sample door or FF&D sample door.

© Copyright StarMark Cabinetry FEBRUARY 2022

WEATHERED/WEATHERED SNOW: NEW!

Available Oak Door Styles and Finishes

Oak door styles
Accord
Bonita
Breckenridge
Clifton
Coralville
Fullerton
Hanover
Harrison
Lehigh
Renwick
Ridgeville
Roanoke
Stockton
Tipton
Ventura

Select Oak door styles are available with Weathered on any of the finishes listed below:

Black	Harvest Snow NEW!	Pearl
Blueberry	Hazelnut	Pearl Chocolate
Blueberry Snow NEW!	Hazelnut Ebony	Pearl Latte
Blueberry Chocolate	Hazelnut Snow NEW!	Peppercorn
Blueberry Ebony	Honey	Peppercorn Chocolate
Bottle Green NEW!	Honey Chocolate	Peppercorn Ebony
Bottle Green Snow NEW!	Honey Snow NEW!	Peppercorn Snow NEW!
Breeze	Ivory Cream	Portabella
Breeze Chocolate	Ivory Cream Chocolate	Portabella Chocolate
Breeze Ebony	Ivory Cream Latte	Portabella Ebony
Buttercream	Java	Repose Grey
Buttercream Chocolate	Java Snow NEW!	Repose Grey Chocolate
Buttercream Latte	Macadamia	Repose Grey Ebony
Capri	Macadamia Chocolate	Rye
Capri Chocolate	Macadamia Latte	Rye Ebony
Capri Ebony	Marshmallow Cream	Rye Snow NEW!
Cappuccino	Marshmallow Cream Chocolate	Sage
Cappuccino Chocolate	Marshmallow Cream Latte	Sage Chocolate
Cappuccino Snow NEW!	Marshmallow Cream Nickel	Sage Ebony
Chestnut	Mocha	Shale
Crystal Fog	Mocha Ebony	Shale Chocolate
Crystal Fog Chocolate	Mocha Snow NEW!	Shale Ebony
Currant NEW!	Moon Bay NEW!	Simply White NEW!
Dove	Moss Green	Slate Snow NEW!
Dove Chocolate	Moss Green Chocolate	Stone
Dove Latte	Moss Green Latte	Stone Chocolate
Dove Nickel	Mushroom	Stone Ebony
Driftwood	Mushroom Chocolate	Tarragon Snow NEW!
Driftwood Chocolate	Mushroom Latte	Toffee Snow NEW!
Driftwood Ebony	Natural	White
Driftwood Snow NEW!	Natural Chocolate	White Chocolate
Frost	Natural Snow NEW!	White Latte
Frost Chocolate	Nutmeg	White Nickel
Frost Ebony	Nutmeg Chocolate	Wild Honey NEW!
Graphite	Oregano	
Graphite Chocolate	Oregano Chocolate	
Graphite Ebony	Oregano Snow NEW!	
Graphite Snow NEW!		
Harvest		
Harvest Chocolate		

WEATHERED/WEATHERED SNOW

Upcharge	15%

MATTE TOP COAT

Upcharge	5%

There is no upcharge for Matte Top Coat on a Weathered finish.

© Copyright StarMark Cabinetry FEBRUARY 2022

▲OLD WORLD DISTRESSING: Available Oak Door Styles and Finishes

Oak door styles

- Abilene NEW!
- Accord
- Aero
- Alite
- Anita NEW!
- Ashford
- Avendale
- Bedford
- Belfonte NEW!
- Bethany
- Bonita
- Breckenridge
- Bridgeport
- Brisbane
- Chappell NEW!
- Chesapeake NEW!
- Clifton NEW!
- Coralville
- Cosmopolitan
- Edgemore NEW!
- Edinburgh NEW!
- Farmington
- Fullerton
- Georgetown
- Griffon
- Hampton
- Hanover
- Harbor
- Harrison
- Hudson
- Huntingford
- Laguna
- Lancaster
- Lehigh
- Manhattan
- Medina
- Melbourne
- Milan
- Monroe
- Oakley
- Orian
- Osprey NEW!
- Overland NEW!
- Regal
- Remington NEW!
- Renwick NEW!
- Richland NEW!
- Ridgeville
- Roanoke
- Roman
- Roseville
- Salem
- San Dimas
- Stockton
- Stratford
- Sundance
- Taft
- Tempo
- Tipton
- Tucson
- Tudor
- Vail NEW!
- Valliant
- Ventura
- Waterfall
- Waynesville
- Westerly
- Xavier

All Oak door styles are available with Old World Distressing on any of the finishes listed below:

- Blueberry Chocolate
- Blueberry Ebony
- Breeze Chocolate
- Breeze Ebony
- Buttercream Chocolate
- Cappuccino Chocolate
- Capri Chocolate
- Capri Ebony
- Crystal Fog Chocolate
- Dove Chocolate
- Driftwood Chocolate
- Driftwood Ebony
- Frost Chocolate
- Frost Ebony
- Graphite Chocolate
- Graphite Ebony
- Harvest Chocolate
- Hazelnut Ebony
- Honey Chocolate
- Ivory Cream Chocolate
- Macadamia Chocolate
- Marshmallow Cream Chocolate
- Mocha Ebony
- Moss Green Chocolate
- Mushroom Chocolate
- Natural Chocolate
- Nutmeg Chocolate
- Oregano Chocolate
- Pearl Chocolate
- Peppercorn Chocolate
- Peppercorn Ebony
- Portabella Chocolate
- Portabella Ebony
- Repose Grey Chocolate
- Repose Grey Ebony
- Rye Ebony
- Sage Chocolate
- Sage Ebony
- Shale Chocolate
- Shale Ebony
- Slate Chocolate
- Slate Ebony
- Stone Chocolate
- Stone Ebony
- Tarragon Chocolate
- Tarragon Ebony
- Toffee Chocolate
- White Chocolate

Old World Distressing is created by randomly applying several distressing techniques, softening all edges, and adding a glaze to accentuate the distressing. A clear top coat is applied. The finish is oven-cured for durability.

TECHNIQUES USED

No additions or deletions allowed:

- Dips
- Light Chain Distressing
- Knife Cuts
- Rasping
- Rounded Corners
- Worm Holes
- Worn Edges
- No Spattering

MATTE TOP COAT NEW!

Matte Top Coat is available on Stain with Glaze combinations with Old World Distressing. There is no upcharge for the Matte Top Coat when applied on Old World Distressing. The Old World Distressing upcharge still applies.

OLD WORLD DISTRESSING

Upcharge	15%

© Copyright StarMark Cabinetry FEBRUARY 2022

QUARTER SAWN OAK: Available Door Styles and Finishes

Quarter Sawn Oak door styles

- Abilene NEW!
- Anita NEW!
- Belfonte NEW!
- Chappell NEW!
- Coralville
- Cosmopolitan
- Edgemore NEW!
- Edinburgh NEW!
- Farmington
- Remington NEW!
- Tempo
- Vail NEW!
- Valliant
- Ventura
- Xavier NEW!

All Quarter Sawn Oak door styles are available with any of the stain finishes listed below:

- Cappuccino
- Cappuccino Chocolate▲
- Chestnut
- Driftwood
- Driftwood Chocolate▲
- Driftwood Ebony▲
- Harvest
- Harvest Chocolate▲
- Hazelnut
- Hazelnut Ebony▲
- Honey
- Honey Chocolate▲
- Java
- Mocha
- Mocha Ebony▲
- Natural
- Natural Chocolate▲
- Nutmeg
- Nutmeg Chocolate▲
- Oregano
- Oregano Chocolate▲
- Rye
- Rye Ebony▲
- Slate
- Slate Chocolate▲
- Slate Ebony▲
- Slate Nickel
- Tarragon
- Tarragon Chocolate▲
- Tarragon Ebony▲
- Toffee
- Toffee Chocolate▲
- Unfinished

▲Finishes available with Old World Distressing

COTTAGE STAIN WITH GLAZE
Upcharge 15%

GLAZING
Upcharge 10%

LIGHT CHAIN DISTRESSING
Upcharge 10%

OLD WORLD DISTRESSING
Upcharge 15%

SPATTERING
Upcharge 10%

There is no upcharge for Spattering on a Stain with Glaze.

MATTE TOP COAT NEW!
Upcharge 5%

There is no upcharge for Matte Top Coat on a Stain with Glaze.

© Copyright StarMark Cabinetry FEBRUARY 2022

QUARTER SAWN OAK: Available Door Styles and Finishes

Quarter Sawn Oak door styles

- Abilene NEW!
- Anita NEW!
- Belfonte NEW!
- Chappell NEW!
- Coralville
- Cosmopolitan
- Edgemore NEW!
- Edinburgh NEW!
- Farmington
- Remington NEW!
- Tempo
- Vail NEW!
- Valliant
- Ventura
- Xavier NEW!

All Quarter Sawn Oak door styles are available with any of the Tinted Varnish finishes listed below:

- Black
- Blueberry
- Blueberry Chocolate▲
- Blueberry Ebony▲
- Bottle Green NEW!
- Breeze
- Breeze Chocolate▲
- Breeze Ebony▲
- Buttercream
- Buttercream Chocolate▲
- Capri
- Capri Chocolate▲
- Capri Ebony▲
- Creekstone NEW!
- Crystal Fog
- Crystal Fog Chocolate▲
- Currant NEW!
- Dove
- Dove Chocolate▲
- Dove Latte
- Dove Nickel
- Frost
- Frost Chocolate▲
- Frost Ebony▲
- Graphite
- Graphite Chocolate▲
- Graphite Ebony▲
- Ivory Cream
- Ivory Cream Chocolate▲
- Macadamia
- Macadamia Chocolate▲
- Macadamia Latte
- Marshmallow Cream
- Marshmallow Cream Chocolate▲
- Marshmallow Cream Latte
- Marshmallow Cream Nickel
- Mineral Gray NEW!
- Moon Bay NEW!
- Moss Green
- Moss Green Chocolate▲
- Mushroom
- Mushroom Chocolate▲
- Pearl
- Pearl Chocolate▲
- Pebble Gray NEW!
- Peppercorn
- Peppercorn Chocolate▲
- Peppercorn Ebony▲
- Portabella
- Portabella Chocolate▲
- Portabella Ebony▲
- Repose Grey
- Repose Grey Chocolate▲
- Repose Grey Ebony▲
- Sage
- Sage Chocolate▲
- Sage Ebony▲
- Shale
- Shale Chocolate▲
- Shale Ebony▲
- Simply White NEW!
- Stone
- Stone Chocolate▲
- Stone Ebony▲
- White
- White Chocolate▲
- White Latte
- White Nickel
- Wild Honey NEW!
- Wings NEW!

▲Finishes available with Old World Distressing

FINISH UPCHARGES

Tinted Varnish	5%
Tinted Varnish with Glaze	15%

LIGHT CHAIN DISTRESSING

Upcharge	10%

There is no upcharge for Light Chain Distressing on Tinted Varnish with Glaze.

OLD WORLD DISTRESSING

Upcharge	15%

COTTAGE TINTED VARNISH WITH GLAZE

Upcharge	15%

! A sample door is the best way to illustrate Specialty finish characteristics. We encourage you to order a 13x16 sample door or FF&D sample door.

© Copyright StarMark Cabinetry FEBRUARY 2022

▲OLD WORLD DISTRESSING: Available Quarter Sawn Oak Door Styles and Finishes

Quarter Sawn Oak door styles

- Abilene NEW!
- Anita NEW!
- Belfonte NEW!
- Chappell NEW!
- Coralville
- Cosmopolitan
- Edgemore NEW!
- Edinburgh NEW!
- Farmington
- Remington NEW!
- Tempo
- Vail NEW!
- Valliant
- Ventura
- Xavier NEW!

All Quarter Sawn Oak door styles are available with Old World Distressing on any of the finishes listed below:

- Blueberry Chocolate
- Blueberry Ebony
- Breeze Chocolate
- Breeze Ebony
- Buttercream Chocolate
- Cappuccino Chocolate
- Capri Chocolate
- Capri Ebony
- Crystal Fog Chocolate
- Dove Chocolate
- Driftwood Chocolate
- Driftwood Ebony
- Frost Chocolate
- Frost Ebony
- Graphite Chocolate
- Graphite Ebony
- Harvest Chocolate
- Hazelnut Ebony
- Honey Chocolate
- Ivory Cream Chocolate
- Macadamia Chocolate
- Marshmallow Cream Chocolate
- Mocha Ebony
- Moss Green Chocolate
- Mushroom Chocolate
- Natural Chocolate
- Nutmeg Chocolate
- Oregano Chocolate
- Pearl Chocolate
- Peppercorn Chocolate
- Peppercorn Ebony
- Portabella Chocolate
- Portabella Ebony
- Repose Grey Chocolate
- Repose Grey Ebony
- Rye Ebony
- Sage Chocolate
- Sage Ebony
- Shale Chocolate
- Shale Ebony
- Slate Chocolate
- Slate Ebony
- Stone Chocolate
- Stone Ebony
- Tarragon Chocolate
- Tarragon Ebony
- Toffee Chocolate
- White Chocolate

Old World Distressing is created by randomly applying several distressing techniques, softening all edges, and adding a glaze to accentuate the distressing. A clear top coat is applied. The finish is oven-cured for durability.

TECHNIQUES USED

No additions or deletions allowed:
- Dips
- Light Chain Distressing
- Knife Cuts
- Rasping
- Rounded Corners
- Worm Holes
- Worn Edges
- No Spattering

MATTE TOP COAT NEW!

Matte Top Coat is available on Stain with Glaze combinations with Old World Distressing. There is no upcharge for the Matte Top Coat when applied on Old World Distressing. The Old World Distressing upcharge still applies.

OLD WORLD DISTRESSING

Upcharge	15%

© Copyright StarMark Cabinetry FEBRUARY 2022

WALNUT: Available Door Styles and Finishes

Walnut door styles

- Accord
- Bonita
- Breckenridge
- Bridgeport
- Coralville
- Cosmopolitan
- Farmington
- Fullerton
- Hanover
- Harrison
- Hudson
- Manhattan
- Medina
- Melbourne
- Milan
- Ridgeville
- Roanoke
- Roseville
- Stockton
- Stratford
- Tempo

All Walnut door styles
are available with any of the stain finishes listed below:

- Cappuccino
- Chestnut
- Harvest
- Hazelnut
- Mocha
- Natural
- Nutmeg
- Oregano
- Rattan
- Rye
- Slate
- Toffee

WALNUT
Upcharge 25%

MATTE TOP COAT NEW!
Upcharge 5%

© Copyright StarMark Cabinetry FEBRUARY 2022

MDF: Available Door Styles and Finishes NEW!

MDF door styles
Tama NEW!

All MDF door styles are available with the Tinted Varnish finishes listed below:

Black	Pearl
Blueberry	Pebble Gray NEW!
Bottle Green NEW!	Peppercorn
Breeze	Portabella
Buttercream	Repose Grey
Capri	Sage
Creekstone NEW!	Shale
Crystal Fog	Simply White NEW!
Currant NEW!	Stone
Dove	White
Frost	Wild Honey NEW!
Graphite	Wings
Ivory Cream	
Macadamia	
Marshmallow Cream	
Mineral Gray NEW!	
Moon Bay NEW!	
Moss Green	
Mushroom	

FINISH UPCHARGES

Tinted Varnish	5%
Weathered	15%

© Copyright StarMark Cabinetry FEBRUARY 2022

Use Space for Notes

© Copyright StarMark Cabinetry FEBRUARY 2022

Use Space for Notes

© Copyright StarMark Cabinetry FEBRUARY 2022

Use Space for Notes

© Copyright StarMark Cabinetry FEBRUARY 2022

Use Space for Notes

© Copyright StarMark Cabinetry FEBRUARY 2022

Inset Cabinetry Specifications

StarMark Inset

INSET

Species	Alder Cherry Maple MDF Quarter Sawn Oak Rustic Alder Walnut	
Door Styles	Addison NEW! Alexandria Annabella NEW! Cambridge NEW! Claymont NEW! DeWitt Fairhaven Knottingham Lafontaine Liberty NEW! Merrimac Reynolds NEW! Rock Elm Terra NEW! Winterhaven	Allentown Amsdahl Ballinger NEW! Charlotte Danburg Evaro NEW! Gillette Lafayette Laforest Mackay Montico Rocheport Rutland NEW! Victor NEW! Xenon
Frame Styles	Beaded Flush	
Hinge Styles	Finial Concealed	

With Inset Cabinetry, you and the homeowner need to understand:

- Quality installation is a must. Inset cabinetry is manufactured with tight reveals. StarMark Cabinetry takes great care to create square, true cabinets. If cabinets are not installed properly, doors may appear warped even when they are not. Every homeowner should expect their walls and floors to have variations; a well-qualified installer can properly shim Inset cabinetry so it does not become out of square.
- Homeowners should be prepared to adjust their doors seasonally as temperatures change. Instructions are shipped with every order, and an adjustment instruction sheet is posted on OneTouch in Install & Care, within the Product Info + Resources section..
- The wall, utility wall and wall base inset cabinetry will be 12" deep. The standard inside storage dimension is 10¾". Unless the cabinetry depth is modified to a greater depth, the cabinet will not accommodate oversized plates or dinnerware. Depth can be modified from 12"-15" in ½" increments:
  Inset Wall Increased Depth INDIW No Charge
  Increases in depth beyond 15" is the standard upcharge.
- Inset cabinetry is on an eight week or longer Cycle Ship.

How to Order Inset Cabinetry

- Use the Inset Cabinetry Order Form
- To order sample doors, use the Inset Sample Order Form
- The Inset Product Awareness Agreement must be signed and sent in with the order.
- Inset order forms and the Inset Product Awareness Agreement are posted on OneTouch in Forms, within the Orders section.

How to Price Inset Cabinetry

1. Add cabinets, accessories, and modifications together.
2. Add upcharge for finish.

Cabinets	$	
Accessories	$	
Modifications	$	
	Subtotal	
Finish Upcharge	%	of subtotal
	Total	

How to determine which cabinets and accessories are available in Inset.

1. Make sure you select cabinets that are available in Inset. Then, use the Face Frame Alignment in this section for Inset face frame openings.
2. Look for the Inset icon within the block and also within the accessory and modifications catalog sections. If the block has the Inset icon, the cabinet, accessory, or modification is available in inset.
3. Pay close attention to any Inset Notes/Caution information within the individual blocks. **NOTE: a few cabinets are not available with the concealed hinge.**

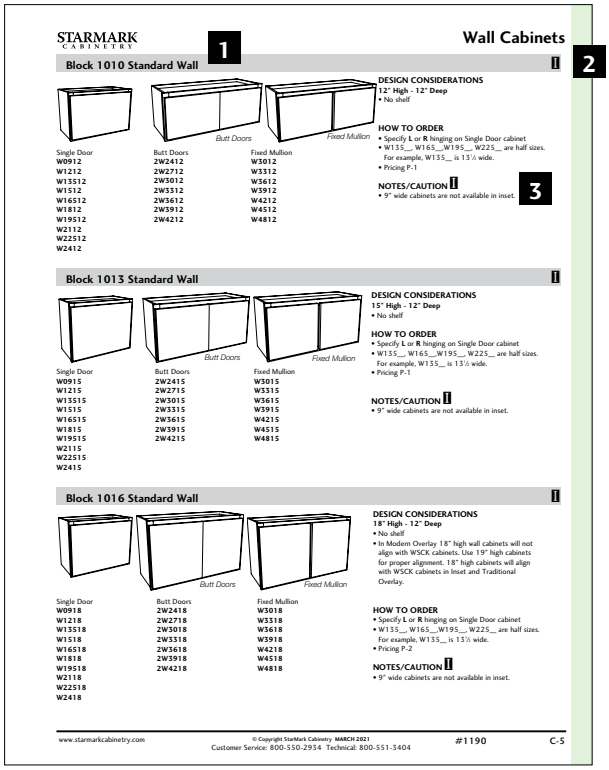
STARMARK CABINETRY

Wall Cabinets

1

2

Block 1010 Standard Wall

Butt Doors

Fixed Mullion

Single Door	Butt Doors	Fixed Mullion
W0912	2W2412	W3012
W1212	2W2712	W3312
W13512	2W3012	W3612
W1512	2W3312	W3912
W16512	2W3612	W4212
W1812	2W3912	W4512
W19512	2W4212	W4812
W2112		
W22512		
W2412		

DESIGN CONSIDERATIONS
12" High - 12" Deep
• No shelf

HOW TO ORDER
• Specify **L** or **R** hinging on Single Door cabinet
• W135__ W165__W195__ W225__ are half sizes. For example, W135__ is 13½ wide.
• Pricing P-1

NOTES/CAUTION
• 9" wide cabinets are not available in inset.

3

Block 1013 Standard Wall

Butt Doors

Fixed Mullion

Single Door	Butt Doors	Fixed Mullion
W0915	2W2415	W3015
W1215	2W2715	W3315
W13515	2W3015	W3615
W1515	2W3315	W3915
W16515	2W3615	W4215
W1815	2W3915	W4515
W19515	2W4215	W4815
W2115		
W22515		
W2415		

DESIGN CONSIDERATIONS
15" High - 12" Deep
• No shelf

HOW TO ORDER
• Specify **L** or **R** hinging on Single Door cabinet
• W135__ W165__W195__ W225__ are half sizes. For example, W135__ is 13½ wide.
• Pricing P-1

NOTES/CAUTION
• 9" wide cabinets are not available in inset.

Block 1016 Standard Wall

Butt Doors

Fixed Mullion

Single Door	Butt Doors	Fixed Mullion
W0918	2W2418	W3018
W1218	2W2718	W3318
W13518	2W3018	W3618
W1518	2W3318	W3918
W16518	2W3618	W4218
W1818	2W3918	W4518
W19518	2W4218	W4818
W2118		
W22518		
W2418		

DESIGN CONSIDERATIONS
18" High - 12" Deep
• No shelf
• In Modern Overlay 18" high wall cabinets will not align with WSCK cabinets. Use 19" high cabinets for proper alignment. 18" high cabinets will align with WSCK cabinets in Inset and Traditional Overlay.

HOW TO ORDER
• Specify **L** or **R** hinging on Single Door cabinet
• W135__ W165__W195__ W225__ are half sizes. For example, W135__ is 13½ wide.
• Pricing P-2

NOTES/CAUTION
• 9" wide cabinets are not available in inset.

www.starmarkcabinetry.com © Copyright StarMark Cabinetry MARCH 2021 Customer Service: 800-550-2934 Technical: 800-551-3404 #1190 C-5

© Copyright StarMark Cabinetry FEBRUARY 2022

STARMARK INSET

1. END PANELS

¾" thick unfinished veneer core plywood glued and stapled into face frame dadoes for rigidity. Wall, base, and utility cabinets are bored to receive adjustable shelf supports. There is a ¼" reveal behind the frame.

OPTIONS

- Finished end panels: block 9020. When you specify a Tinted Varnish, a Tinted Varnish with glaze, and specialty colors that have a Tinted Varnish base, for example, Homestead or Amaretto, the end panel will have MDF crossband as the exterior ply. This material assures the best possible finish. To create a Finished end panel, in all species, we use an end panel that has MDF crossband as the secondary ply. This material assures the best surface for the exterior veneer to be applied to, and this in turn results in the best possible finish.
- Furniture end panels: block 9030. This eliminates the ¼" reveal. When you specify a Tinted Varnish, a Tinted Varnish with glaze, and specialty colors that have a Tinted Varnish base, for example, Homestead or Amaretto, the end panel will have MDF crossband as the exterior ply. This material assures the best possible finish.
- Flush end panels: block 9040. This eliminates the ¼" reveal. When you specify a Tinted Varnish, a Tinted Varnish with glaze, and specialty colors that have a Tinted Varnish base, for example, Homestead or Amaretto, the end panel will have MDF crossband as the exterior ply. This material assures the best possible finish.
- Beaded Flush end panels: block 9045. This eliminates the ¼" reveal.
- Integrated Matching Decorator Panel: block 9060. This eliminates the ¼" reveal.
- Face Frame and Door on Cabinet End: block 9070. This eliminates the ¼" reveal.

2. TOPS & BOTTOMS

Cabinet tops and bottoms are nominal ½" veneer plywood and they are surfaced with natural birch melamine (for added moisture resistance and cleanability) on the interior and exterior, glued to the face frame dado and end panel dado, then glued and stapled into the back rail for rigidity.

3. BACKS

Backs are nominal ½" veneer core plywood with veneer exterior and natural birch melamine interior. Backs are secured to the top/bottom rabbet and end panel rabbet with staples and glue.

OPTIONS

- Finished Back block 9410. The standard back is replaced with a ¾" veneer core plywood panel that has been finished. Perfect for when the back of the cabinet will be visible, such as island and peninsula applications.
- Finished Panel Back block 9420. The standard back is replaced with an Authentic Desk Island panel (wainscot).

4. SUPPORT RUNNERS

Support runners are nominal ½" thick veneer core plywood that connect face frame, end panels and cabinet back on base cabinets. Horizontal supports are ½" thick veneer core plywood that provide extra support on base cabinets.

5. FACE FRAMES

Face frames are ¾" thick select solid hardwood. Rails and stiles are joined with concealed screws and glue. Rails and stiles are dadoed to receive end panels, tops and bottoms.

Inset cabinetry depth can be modified from 12" - 15" in ½" increments: **Inset Wall Increased Depth INDIW No Charge**

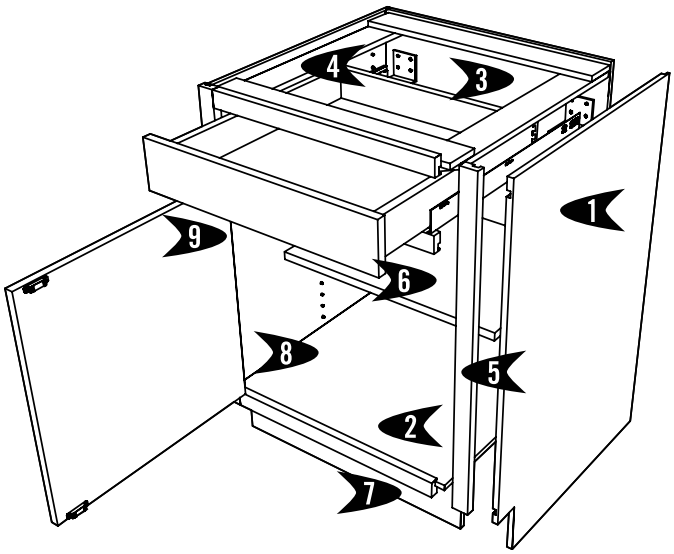

6. SHELVES

Wall and base shelves are ¾" thick hardwood plywood surfaced with natural birch melamine. Base shelves are two-thirds depth.
All wall cabinet shelves and base cabinet shelves are adjustable.
Matching edge banding is attached to front of shelf.
Cabinets ordered with finished veneer interiors receive ¾" veneer core plywood shelves with veneer on both sides. The shelves receive stain, sealer and top coat.

OPTIONS

- Full depth shelves: block 9460

7. TOE BOARDS

Toe boards are unfinished nominal ½" thick veneer core plywood, stapled to and located between the end panels. Plywood (veneer) toe board trim (block 12200) is recommended to cover the toe boards.

8. INTERIOR

Cabinet interiors are surfaced with natural birch melamine.

OPTIONS

- Cabinets ordered with Finished Veneer Interior (block 9480) have hardwood veneer on the interior. It is stained, sealed and topcoated. The shelves are plywood veneer.
- Cabinets ordered with Maple Natural Veneer Interior (block 9470) have maple natural veneer on all interior surfaces—top, bottom, shelves, side panels, back panel and drawer bottom. Tops and bottoms of wall cabinets have maple natural veneer on the exterior.

9. HINGES

A full-wrap finial hinge is standard on all Inset cabinetry doors. Finial hinges are in five colors; Dark Oil Rubbed Bronze, Matte Nickel, Black, Pewter and Copper Bronze. See Products in Color. With finial hinges, two magnets are attached to the top and bottom of each door.
Concealed inset hinges are an option on all Inset cabinetry doors. The swing of a door with a concealed inset hinge is 110-120 degrees. Additionally, the swing of the door may be restricted by adjacent cabinetry, decorative hardware and other items. Concealed hinges may limit some cabinet choices, shelf placement and may be visible through glass doors more than finial hinges. Concealed inset hinges include soft close.

StarMark Inset Cabinetry uses plywood for end panels, tops, bottoms, shelves and backs. Compare our material to other cabinetry companies.

© Copyright StarMark Cabinetry **FEBRUARY 2022**

INSET DOOR STYLES

DOOR	SPECIES
Addison NEW!	Alder, Cherry, Maple, Quarter Sawn Oak, Rustic Alder
Alexandria	Alder, Cherry, Maple, Quarter Sawn Oak, Rustic Alder
Allentown	Alder, Cherry, Maple, Quarter Sawn Oak, Rustic Alder
Amsdahl	Alder, Cherry, Maple, Quarter Sawn Oak, Rustic Alder
Annabella NEW!	Alder, Cherry, Maple, Quarter Sawn Oak, Rustic Alder
Ballinger NEW!	Alder, Cherry, Maple, Quarter Sawn Oak, Rustic Alder
Cambridge NEW!	Alder, Cherry, Maple, Quarter Sawn Oak, Rustic Alder
Charlotte	Alder, Cherry, Maple, Quarter Sawn Oak, Rustic Alder, Walnut
Claymont NEW!	Alder, Cherry, Maple, Quarter Sawn Oak, Rustic Alder, Walnut
Danburg	Alder, Cherry, Maple, Quarter Sawn Oak, Rustic Alder, Walnut
DeWitt	Alder, Cherry, Maple, Quarter Sawn Oak, Rustic Alder, Walnut
Evaro NEW!	Alder, Cherry, Maple, Quarter Sawn Oak, Rustic Alder
Fairhaven	Alder, Cherry, Maple, Quarter Sawn Oak, Rustic Alder, Walnut
Gillette	Alder, Cherry, Maple, Quarter Sawn Oak, Rustic Alder, Walnut
Knottingham	Alder, Cherry, Maple, Quarter Sawn Oak, Rustic Alder, Walnut
Lafayette	Alder, Cherry, Maple, Quarter Sawn Oak, Rustic Alder
Lafontaine	Alder, Cherry, Maple, Quarter Sawn Oak, Rustic Alder, Walnut
Laforest	Alder, Cherry, Maple, Quarter Sawn Oak, Rustic Alder, Walnut
Liberty NEW!	Alder, Cherry, Maple, Quarter Sawn Oak, Rustic Alder, Walnut
Mackay	Alder, Cherry, Maple, Quarter Sawn Oak, Rustic Alder, Walnut
Merrimac	Alder, Cherry, Maple, Quarter Sawn Oak, Rustic Alder, Walnut
Montico	Alder, Cherry, Maple, Quarter Sawn Oak, Rustic Alder, Walnut
Reynolds NEW!	Alder, Cherry, Maple, Quarter Sawn Oak, Rustic Alder, Walnut
Rocheport	Alder, Cherry, Maple, Quarter Sawn Oak, Rustic Alder, Walnut
Rock Elm	Alder, Cherry, Maple, Quarter Sawn Oak, Rustic Alder, Walnut
Rutland NEW!	Alder, Cherry, Maple, Quarter Sawn Oak, Rustic Alder
Terra NEW!	MDF
Victor NEW!	Alder, Cherry, Maple, Quarter Sawn Oak, Rustic Alder
Winterhaven	Alder, Cherry, Maple, Quarter Sawn Oak, Rustic Alder
Xenon	Alder, Cherry, Maple, Quarter Sawn Oak, Rustic Alder

Please Note:
On RUSTIC ALDER INSET CABINETRY, the doors and drawer headers are RUSTIC ALDER and the face frames are STANDARD ALDER.
The TERRA MDF door style is built with a MAPLE face frame.

© Copyright StarMark Cabinetry **FEBRUARY 2022**

ADDISON NEW!

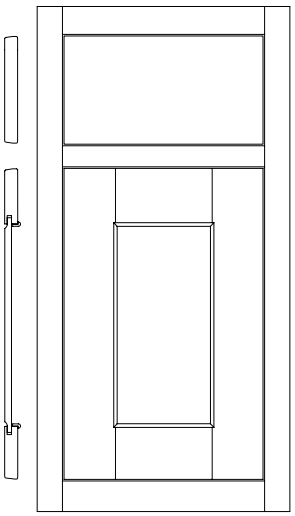

Standard slab drawer header

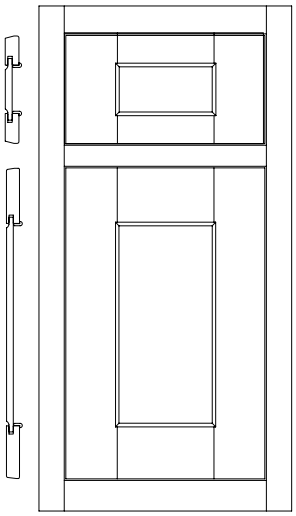

Optional 5-piece drawer header

Door Frame: ¾" thick square 2¾" stiles and rails
Door Center Panel: Solid ⅜" reverse flat panel trimmed with moulding
Drawer Header Center Panel: Solid ⅜" reverse flat panel trimmed with moulding on 5-piece drawer header
Drawer Header Stile Width: 2¾"
Drawer Header Rail Width: 1½"

Species	Alder	Cherry	Maple
Price Column	12	12	12

Species	Qtr. Sawn Oak	Rustic Alder
Price Column	12	12

Construction Information	
Hinge	Finial or Concealed
Inset Type	Beaded or Flush
Door and Drawer Header	7 degree back-bevel

Options	**Is it available?**	
5-Piece Header	Yes $93 per drawer header	
Profiled Header	No	
Furniture Pegs	Yes	Block 9800
Insert Doors	Yes	Block 9500
Mullion Doors	Yes	Block 9530
Thornton Insert Door	Yes	Block 9520
Veg Storage Drawer	Yes	Block 9820
Radius Doors	No	
Wall Cabinets	Yes	
Base Cabinets	Yes	
Tall Cabinets	Yes	
Vanity Cabinets	Yes	

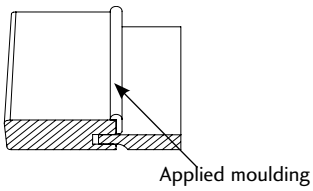

NOTES/CAUTIONS

1. 5-piece drawer header only available on drawer headers 5½" tall and greater.
2. Door and drawer hardware required.
3. No outside edge treatments available.
4. On Rustic Alder inset cabinetry, the doors and drawer headers are Rustic Alder and the face frames are standard Alder.
5. See Osprey for overlay option.
6. Mullion doors will not have applied moulding.
7. The grain on the drawer header center panel runs horizontally.

© Copyright StarMark Cabinetry FEBRUARY 2022

ALEXANDRIA

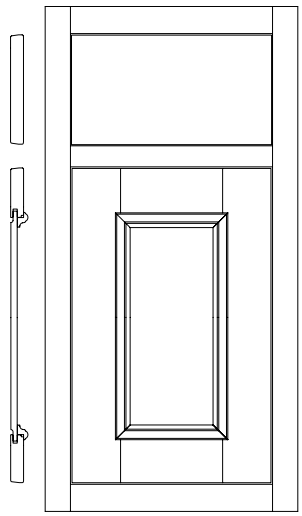

Standard slab drawer header

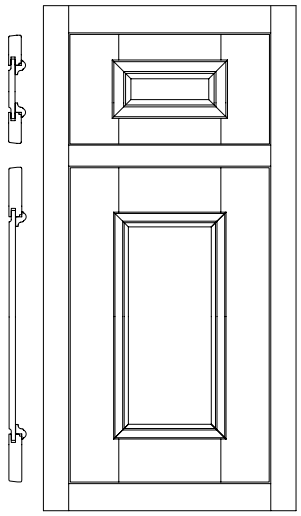

Optional 5-piece drawer header

Door Frame: ¾" thick square 2¼" stiles and rails
Door Center Panel: Solid ⅜" reverse flat panel trimmed with moulding
Drawer Header Center Panel: Solid ⅜" reverse flat panel trimmed with moulding on 5-piece drawer header
Drawer Header Stile Width: 2¼"
Drawer Header Rail Width: 1½"

Species	Alder	Cherry	Maple	
Price Column	12	12	11	
Species	Qtr. Sawn Oak		Rustic Alder	
Price Column	12		12	

Construction Information	
Hinge	Finial or Concealed
Inset Type	Beaded or Flush
Door and Drawer Header	7 degree back-bevel
Options	**Is it available?**
5-Piece Header	Yes $93 per drawer header
Profiled Header	No
Furniture Pegs	Yes Block 9800
Insert Doors	Yes Block 9500
Mullion Doors	Yes Block 9530
Thornton Insert Door	Yes Block 9520
Veg Storage Drawer	Yes Block 9820
Radius Doors	No
Wall Cabinets	Yes
Base Cabinets	Yes
Tall Cabinets	Yes
Vanity Cabinets	Yes

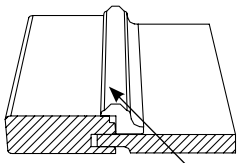

Applied moulding

NOTES/CAUTIONS

1. 5-piece drawer header only available on drawer headers 5½" tall and greater.
2. Door and drawer hardware required.
3. No outside edge treatments available.
4. On Rustic Alder inset cabinetry, the doors and drawer headers are Rustic Alder and the face frames are standard Alder.
5. See Avendale for overlay option.
6. Mullion doors will not have applied moulding.
7. The grain on the drawer header center panel runs horizontally.

© Copyright StarMark Cabinetry FEBRUARY 2022

ALLENTOWN

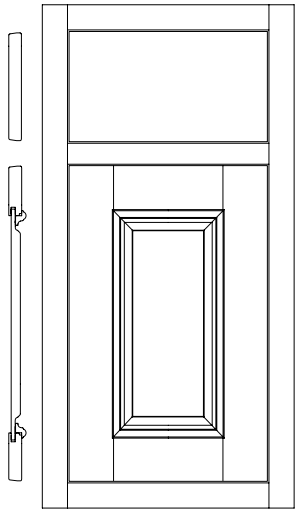

Standard slab drawer header

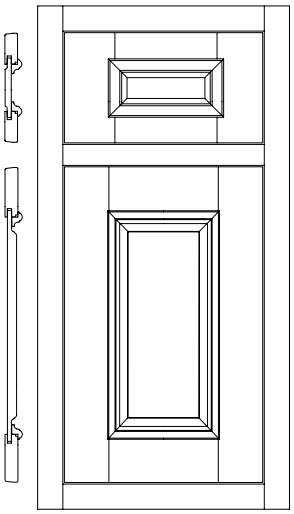

Optional 5-piece drawer header

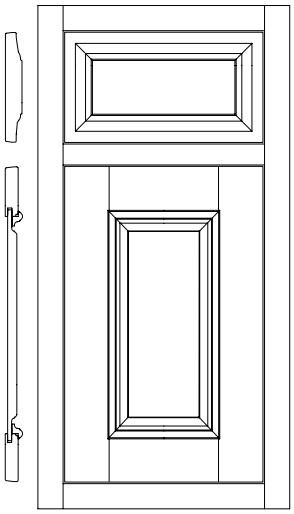

Optional profiled drawer header

Door Frame: ¾" thick square 2¼" stiles and rails
Door Center Panel: Solid ⅝" raised panel trimmed with moulding
Drawer Header Center Panel: Solid ⅜" reverse flat panel trimmed with moulding on 5-piece drawer header
Drawer Header Stile Width: 2¼"
Drawer Header Rail Width: 1½"

Species	Alder	Cherry	Maple	
Price Column	12	12	11	
Species	Qtr. Sawn Oak		Rustic Alder	
Price Column	12		12	

Construction Information	
Hinge	Finial or Concealed
Inset Type	Beaded or Flush
Door and Drawer Header	7 degree back-bevel

Options	**Is it available?**	
5-Piece Header	Yes $93 per drawer header	
Profiled Header	Yes $33 per drawer header	
Furniture Pegs	Yes	Block 9800
Insert Doors	Yes	Block 9500
Mullion Doors	Yes	Block 9530
Thornton Insert Door	Yes	Block 9520
Veg Storage Drawer	Yes	Block 9820
Radius Doors	No	
Wall Cabinets	Yes	
Base Cabinets	Yes	
Tall Cabinets	Yes	
Vanity Cabinets	Yes	

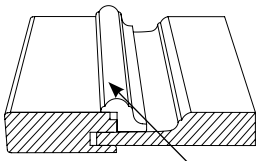

NOTES/CAUTIONS

1. 5-piece drawer header only available on drawer headers 5½" tall and greater.
2. Door and drawer hardware required.
3. No outside edge treatments available.
4. On Rustic Alder inset cabinetry, the doors and drawer headers are Rustic Alder and the face frames are standard Alder.
5. See Huntingford for overlay option.
6. Mullion doors will not have applied moulding.
7. The grain on the drawer header center panel runs horizontally.
8. ⅝" raised panel on 5-piece drawer header 6½" tall and greater.

© Copyright StarMark Cabinetry FEBRUARY 2022

AMSDAHL

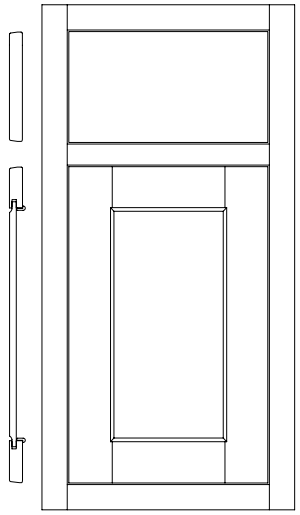

Standard slab drawer header

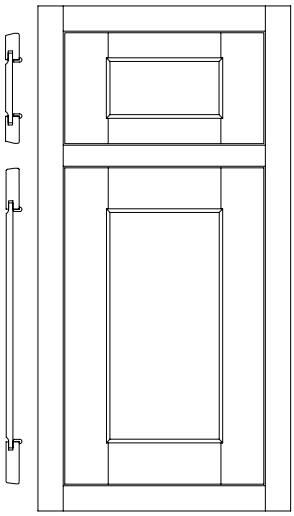

Optional 5-piece drawer header

Door Frame: ¾″ thick square 2¼″ stiles and rails
Door Center Panel: Solid ⅜″ reverse flat panel trimmed with moulding
Drawer Header Center Panel: Solid ⅜″ reverse flat panel trimmed with moulding on 5-piece drawer header
Drawer Header Stile Width: 2¼″
Drawer Header Rail Width: 1½″

Species	Alder	Cherry	Maple	
Price Column	12	12	11	
Species	Qtr. Sawn Oak		Rustic Alder	
Price Column	12		12	

Construction Information	
Hinge	Finial or Concealed
Inset Type	Beaded or Flush
Door and Drawer Header	7 degree back-bevel

Options	**Is it available?**	
5-Piece Header	Yes $93 per drawer header	
Profiled Header	No	
Furniture Pegs	Yes	Block 9800
Insert Doors	Yes	Block 9500
Mullion Doors	Yes	Block 9530
Thornton Insert Door	Yes	Block 9520
Veg Storage Drawer	Yes	Block 9820
Radius Doors	No	
Wall Cabinets	Yes	
Base Cabinets	Yes	
Tall Cabinets	Yes	
Vanity Cabinets	Yes	

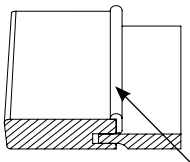

Applied moulding

NOTES/CAUTIONS

1. 5-piece drawer header only available on drawer headers 5½″ tall and greater.
2. Door and drawer hardware required.
3. No outside edge treatments available.
4. On Rustic Alder inset cabinetry, the doors and drawer headers are Rustic Alder and the face frames are standard Alder.
5. See Orian for overlay option.
6. Mullion doors will not have applied moulding.
7. The grain on the drawer header center panel runs horizontally.

© Copyright StarMark Cabinetry FEBRUARY 2022

ANNABELLA NEW!

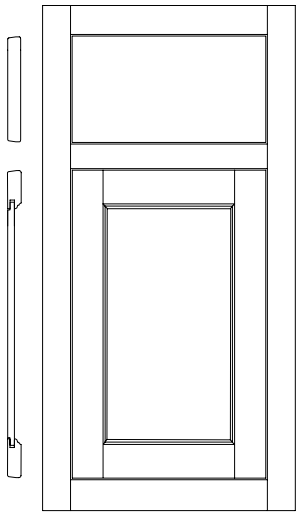

Standard slab drawer header

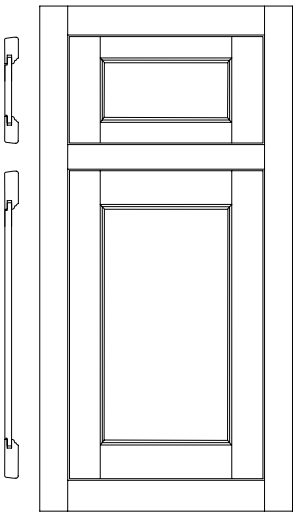

Optional 5-piece drawer header

Door Frame: ¾" thick square 2¼" stiles and rails
Door Center Panel: Solid ⅜" reverse flat panel
Drawer Header Center Panel: Solid ⅜" reverse flat panel on 5-piece drawer header
Drawer Header Stile Width: 2¼"
Drawer Header Rail Width: 1½"

Species	Alder	Cherry	Maple	
Price Column	11	11	11	
Species	Qtr. Sawn Oak		Rustic Alder	
Price Column	12		11	

Construction Information	
Hinge	Finial or Concealed
Inset Type	Beaded or Flush
Door and Drawer Header	7 degree back-bevel

Options	**Is it available?**	
5-Piece Header	Yes $93 per drawer header	
Profiled Header	No	
Furniture Pegs	Yes	Block 9800
Insert Doors	Yes	Block 9500
Mullion Doors	Yes	Block 9530
Thornton Insert Door	Yes	Block 9520
Veg Storage Drawer	Yes	Block 9820
Radius Doors	No	
Wall Cabinets	Yes	
Base Cabinets	Yes	
Tall Cabinets	Yes	
Vanity Cabinets	Yes	

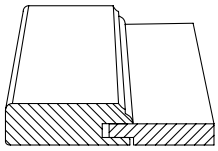

NOTES/CAUTIONS

1. 5-piece drawer header only available on drawer headers 5½" tall and greater.
2. Door and drawer hardware required.
3. No outside edge treatments available.
4. On Rustic Alder inset cabinetry, the doors and drawer headers are Rustic Alder and the face frames are standard Alder.
5. See Abilene for overlay option.
6. The grain on the drawer header center panel runs horizontally.

© Copyright StarMark Cabinetry FEBRUARY 2022

BALLINGER NEW!

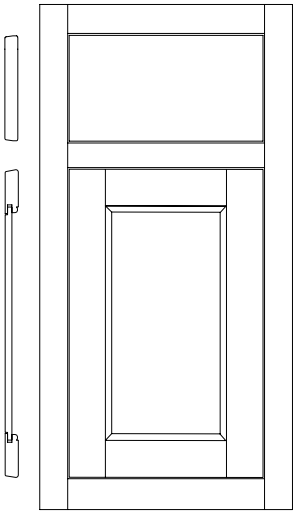

Standard slab drawer header

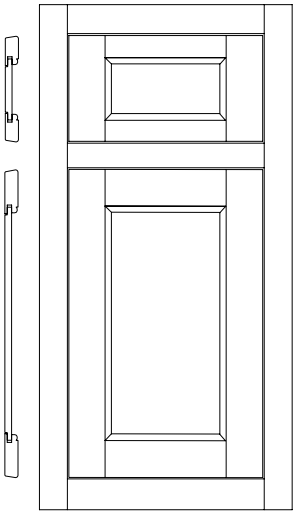

Optional 5-piece drawer header

Door Frame: ¾" thick square 2¼" stiles and rails
Door Center Panel: Solid ⅜" reverse flat panel
Drawer Header Center Panel: Solid ⅜" reverse flat panel on 5-piece drawer header
Drawer Header Stile Width: 2¼"
Drawer Header Rail Width: 1½"

Species	Alder	Cherry	Maple	
Price Column	12	12	12	
Species	Qtr. Sawn Oak		Rustic Alder	
Price Column	12		12	

Construction Information	
Hinge	Finial or Concealed
Inset Type	Beaded or Flush
Door and Drawer Header	7 degree back-bevel

Options	**Is it available?**	
5-Piece Header	Yes $93 per drawer header	
Profiled Header	No	
Furniture Pegs	Yes	Block 9800
Insert Doors	Yes	Block 9500
Mullion Doors	Yes	Block 9530
Thornton Insert Door	Yes	Block 9520
Veg Storage Drawer	Yes	Block 9820
Radius Doors	No	
Wall Cabinets	Yes	
Base Cabinets	Yes	
Tall Cabinets	Yes	
Vanity Cabinets	Yes	

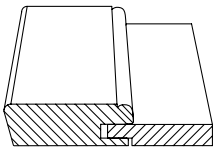

NOTES/CAUTIONS

1. 5-piece drawer header only available on drawer headers 5½" tall and greater.
2. Door and drawer hardware required.
3. No outside edge treatments available.
4. On Rustic Alder inset cabinetry, the doors and drawer headers are Rustic Alder and the face frames are standard Alder.
5. See Belfonte for overlay option.
6. The grain on the drawer header center panel runs horizontally.

© Copyright StarMark Cabinetry FEBRUARY 2022

CAMBRIDGE NEW!

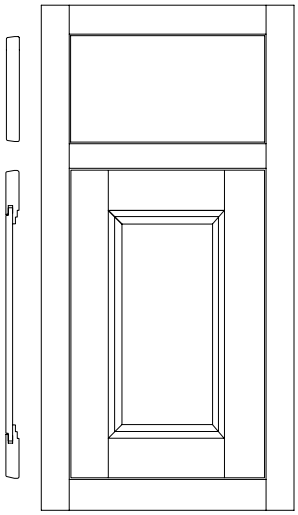

Standard slab drawer header

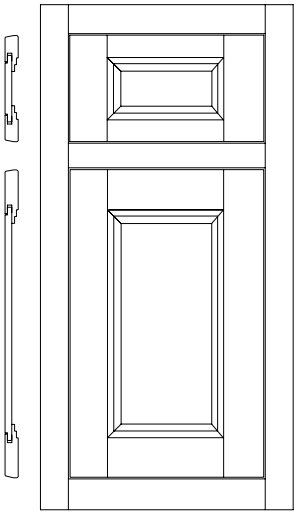

Optional 5-piece drawer header

Door Frame: ¾" thick square 2¾" stiles and rails
Door Center Panel: Solid ⅜" reverse flat panel
Drawer Header Center Panel: Solid ⅜" reverse flat panel on 5-piece drawer header
Drawer Header Stile Width: 2¾"
Drawer Header Rail Width: 1⅞"

Species	Alder	Cherry	Maple	
Price Column	12	12	12	

Species	Qtr. Sawn Oak	Rustic Alder
Price Column	12	12

Construction Information	
Hinge	Finial or Concealed
Inset Type	Beaded or Flush
Door and Drawer Header	7 degree back-bevel

Options	**Is it available?**	
5-Piece Header	Yes $93 per drawer header	
Profiled Header	No	
Furniture Pegs	Yes	Block 9800
Insert Doors	Yes	Block 9500
Mullion Doors	Yes	Block 9530
Thornton Insert Door	Yes	Block 9520
Veg Storage Drawer	Yes	Block 9820
Radius Doors	No	
Wall Cabinets	Yes	
Base Cabinets	Yes	
Tall Cabinets	Yes	
Vanity Cabinets	Yes	

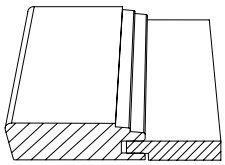

NOTES/CAUTIONS

1. 5-piece drawer header only available on drawer headers 5½" tall and greater.
2. Door and drawer hardware required.
3. No outside edge treatments available.
4. On Rustic Alder inset cabinetry, the doors and drawer headers are Rustic Alder and the face frames are standard Alder.
5. See Chappell for overlay option.
6. The grain on the drawer header center panel runs horizontally.

© Copyright StarMark Cabinetry FEBRUARY 2022

CHARLOTTE

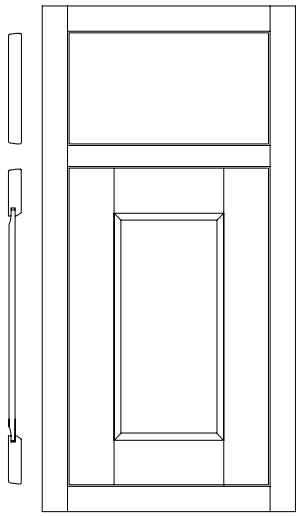

Standard slab drawer header

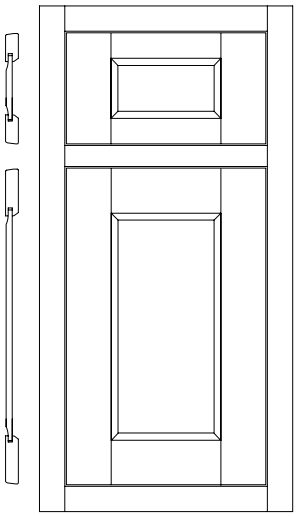

Optional 5-piece drawer header

Door Frame: ¾" thick square 2¼" stiles and rails
Door Center Panel: Solid ⅜" reverse flat panel
Drawer Header Center Panel: Solid ⅜" reverse flat panel on 5-piece drawer header
Drawer Header Stile Width: 2¼"
Drawer Header Rail Width: 1½"

Species	Alder	Cherry	Maple	
Price Column	11	11	11	
Species	Qtr. Sawn Oak		Rustic Alder	
Price Column	12		11	
Species	Walnut			
Price Column	12 +25%			

Construction Information	
Hinge	Finial or Concealed
Inset Type	Beaded or Flush
Door and Drawer Header	7 degree back-bevel

Options	**Is it available?**	
5-Piece Header	Yes $93 per drawer header	
Profiled Header	No	
Furniture Pegs	Yes	Block 9800
Insert Doors	Yes	Block 9500
Mullion Doors	Yes	Block 9530
Thornton Insert Door	Yes	Block 9520
Veg Storage Drawer	Yes	Block 9820
Radius Doors	No	
Wall Cabinets	Yes	
Base Cabinets	Yes	
Tall Cabinets	Yes	
Vanity Cabinets	Yes	

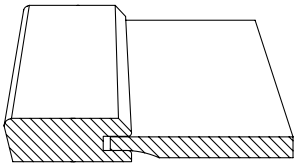

NOTES/CAUTIONS

1. 5-piece drawer header only available on drawer headers 5½" tall and greater.
2. Door and drawer hardware required.
3. No outside edge treatments available.
4. On Rustic Alder inset cabinetry, the doors and drawer headers are Rustic Alder and the face frames are standard Alder.
5. See Coralville for overlay option.
6. The grain on the drawer header center panel runs horizontally.

© Copyright StarMark Cabinetry **FEBRUARY 2022**

Inset Cabinetry Specifications

CLAYMONT NEW!

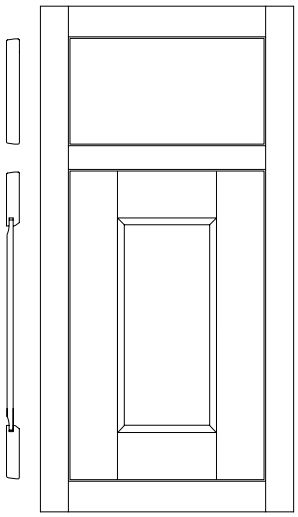

Standard slab drawer header

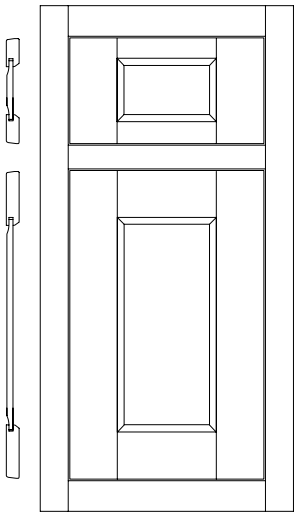

Optional 5-piece drawer header

Door Frame: ¾" thick square 2¾" stiles and rails
Door Center Panel: Solid ⅜" reverse flat panel
Drawer Header Center Panel: Solid ⅜" reverse flat panel on 5-piece drawer header
Drawer Header Stile Width: 2¾"
Drawer Header Rail Width: 1½"

Species	Alder	Cherry	Maple	
Price Column	11	11	11	
Species	Qtr. Sawn Oak		Rustic Alder	
Price Column	12		11	
Species	Walnut			
Price Column	12 +25%			

Construction Information	
Hinge	Finial or Concealed
Inset Type	Beaded or Flush
Door and Drawer Header	7 degree back-bevel

Options	**Is it available?**	
5-Piece Header	Yes $93 per drawer header	
Profiled Header	No	
Furniture Pegs	Yes	Block 9800
Insert Doors	Yes	Block 9500
Mullion Doors	Yes	Block 9530
Thornton Insert Door	Yes	Block 9520
Veg Storage Drawer	Yes	Block 9820
Radius Doors	No	
Wall Cabinets	Yes	
Base Cabinets	Yes	
Tall Cabinets	Yes	
Vanity Cabinets	Yes	

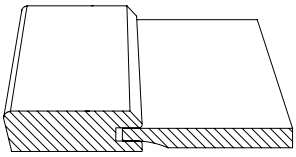

NOTES/CAUTIONS

1. 5-piece drawer header only available on drawer headers 5½" tall and greater.
2. Door and drawer hardware required.
3. No outside edge treatments available.
4. On Rustic Alder inset cabinetry, the doors and drawer headers are Rustic Alder and the face frames are standard Alder.
5. See Clifton for overlay option.
6. The grain on the drawer header center panel runs horizontally.

© Copyright StarMark Cabinetry FEBRUARY 2022

DANBURG

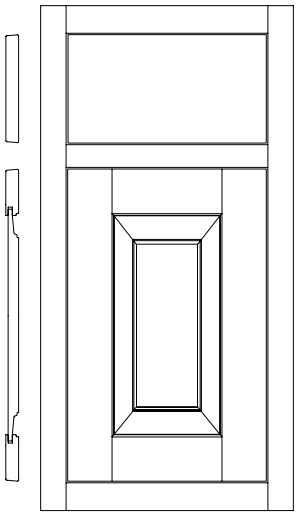

Standard slab drawer header

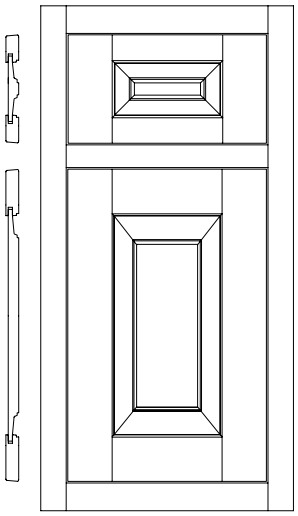

Optional 5-piece drawer header

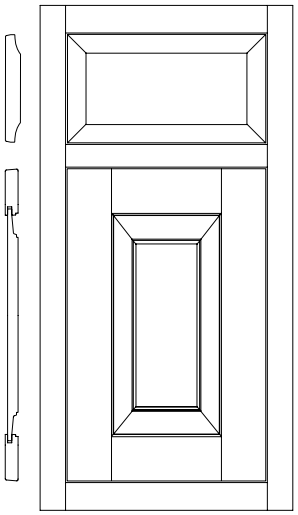

Optional profiled drawer header

Door Frame: ¾″ thick square 2¼″ stiles and rails
Door Center Panel: Solid ⅝″ raised panel
Drawer Header Center Panel: Solid ⅝″ raised panel on 5-piece drawer header
Drawer Header Stile Width: 2¼″
Drawer Header Rail Width: 1½″

Species	Alder	Cherry	Maple	
Price Column	11	11	11	
Species	Qtr. Sawn Oak		Rustic Alder	
Price Column	11		11	
Species	Walnut			
Price Column	12 +25%			
Construction Information				
Hinge	Finial or Concealed			
Inset Type	Beaded or Flush			
Door and Drawer Header	7 degree back-bevel			
Options	**Is it available?**			
5-Piece Header	Yes $93 per drawer header			
Profiled Header	Yes $33 per drawer header			
Furniture Pegs	Yes		Block 9800	
Insert Doors	Yes		Block 9500	
Mullion Doors	Yes		Block 9530	
Thornton Insert Door	Yes		Block 9520	
Veg Storage Drawer	Yes		Block 9820	
Radius Doors	No			
Wall Cabinets	Yes			
Base Cabinets	Yes			
Tall Cabinets	Yes			
Vanity Cabinets	Yes			

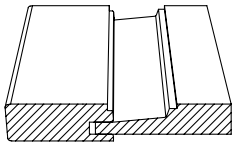

NOTES/CAUTIONS

1. 5-piece drawer header only available on drawer headers 5½″ tall and greater.
2. Door and drawer hardware required.
3. No outside edge treatments available.
4. On Rustic Alder inset cabinetry, the doors and drawer headers are Rustic Alder and the face frames are standard Alder.
5. See Hanover for overlay option.
6. The grain on the drawer header center panel runs horizontally.

© Copyright StarMark Cabinetry FEBRUARY 2022

Inset Cabinetry Specifications

DEWITT

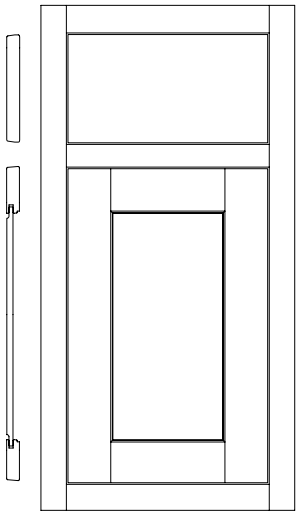

Standard slab drawer header

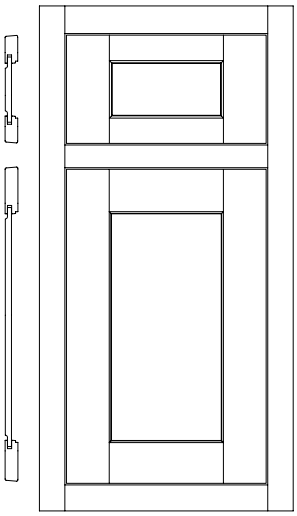

Optional 5-piece drawer header

Door Frame: ¾" thick square 2¼" stiles and rails
Door Center Panel: Solid ⅜" reverse flat panel
Drawer Header Center Panel: Solid ⅜" reverse flat panel on 5-piece drawer header
Drawer Header Stile Width: 2¼"
Drawer Header Rail Width: 1½"

Species	Alder	Cherry	Maple	
Price Column	11	11	11	
Species	Qtr. Sawn Oak		Rustic Alder	
Price Column	11		11	
Species	Walnut			
Price Column	12 +25%			
Construction Information				
Hinge	Finial or Concealed			
Inset Type	Beaded or Flush			
Door and Drawer Header	7 degree back-bevel			
Options	**Is it available?**			
5-Piece Header	Yes $93 per drawer header			
Profiled Header	No			
Furniture Pegs	Yes		Block 9800	
Insert Doors	Yes		Block 9500	
Mullion Doors	Yes		Block 9530	
Thornton Insert Door	Yes		Block 9520	
Veg Storage Drawer	Yes		Block 9820	
Radius Doors	No			
Wall Cabinets	Yes			
Base Cabinets	Yes			
Tall Cabinets	Yes			
Vanity Cabinets	Yes			

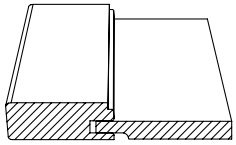

NOTES/CAUTIONS

1. 5-piece drawer header only available on drawer headers 5½" tall and greater.
2. Door and drawer hardware required.
3. No outside edge treatments available.
4. On Rustic Alder inset cabinetry, the doors and drawer headers are Rustic Alder and the face frames are standard Alder.
5. See Harrison for overlay option.
6. The grain on the drawer header center panel runs horizontally.

© Copyright StarMark Cabinetry FEBRUARY 2022

EVARO

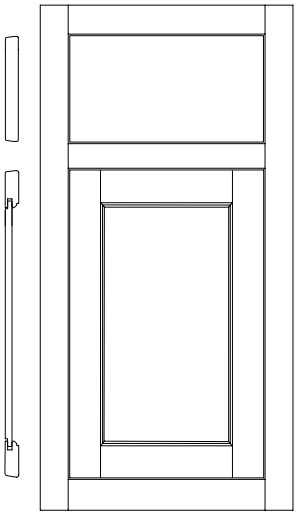

Standard slab drawer header

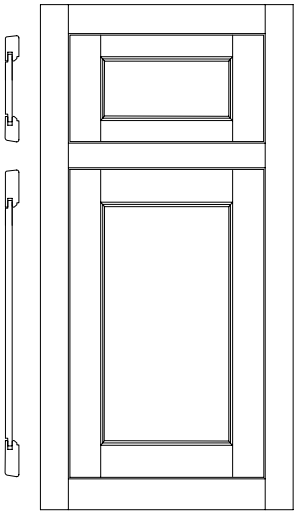

Optional 5-piece drawer header

Door Frame: ¾" thick square 2¼" stiles and rails
Door Center Panel: Solid ⅜" reverse flat panel
Drawer Header Center Panel: Solid ⅜" reverse flat panel on 5-piece drawer header
Drawer Header Stile Width: 2¼"
Drawer Header Rail Width: 1½"

Species	Alder	Cherry	Maple
Price Column	11	11	11

Species	Qtr. Sawn Oak	Rustic Alder
Price Column	12	11

Construction Information	
Hinge	Finial or Concealed
Inset Type	Beaded or Flush
Door and Drawer Header	7 degree back-bevel

Options	**Is it available?**	
5-Piece Header	Yes $93 per drawer header	
Profiled Header	No	
Furniture Pegs	Yes	Block 9800
Insert Doors	Yes	Block 9500
Mullion Doors	Yes	Block 9530
Thornton Insert Door	Yes	Block 9520
Veg Storage Drawer	Yes	Block 9820
Radius Doors	No	
Wall Cabinets	Yes	
Base Cabinets	Yes	
Tall Cabinets	Yes	
Vanity Cabinets	Yes	

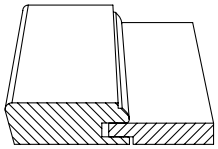

NOTES/CAUTIONS

1. 5-piece drawer header only available on drawer headers 5½" tall and greater.
2. Door and drawer hardware required.
3. No outside edge treatments available.
4. On Rustic Alder inset cabinetry, the doors and drawer headers are Rustic Alder and the face frames are standard Alder.
5. See Edgemore for overlay option.
6. The grain on the drawer header center panel runs horizontally.

© Copyright StarMark Cabinetry **FEBRUARY 2022**

FAIRHAVEN

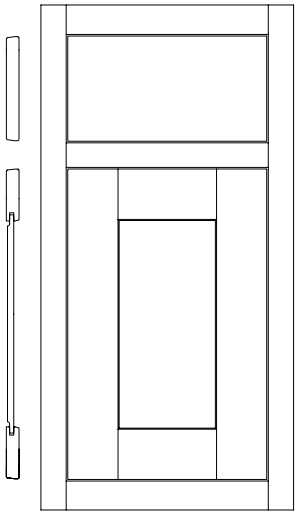

Standard slab drawer header

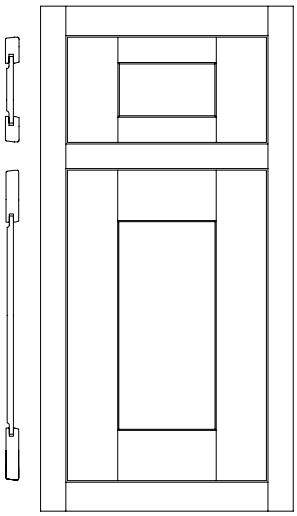

Optional 5-piece drawer header

Door Frame: ¾" thick square 2¾" stiles and rails
Door Center Panel: Solid ⅜" reverse flat panel
Drawer Header Center Panel: Solid ⅜" reverse flat panel on 5-piece drawer header
Drawer Header Stile Width: 2¾"
Drawer Header Rail Width: 1½"

Species	Alder	Cherry	Maple	
Price Column	11	11	11	
Species	Qtr. Sawn Oak		Rustic Alder	
Price Column	11		11	
Species	Walnut			
Price Column	12 +25%			
Construction Information				
Hinge	Finial or Concealed			
Inset Type	Beaded or Flush			
Door and Drawer Header	7 degree back-bevel			
Options	**Is it available?**			
5-Piece Header	Yes $93 per drawer header			
Profiled Header	No			
Furniture Pegs	Yes		Block 9800	
Insert Doors	Yes		Block 9500	
Mullion Doors	Yes		Block 9530	
Thornton Insert Door	Yes		Block 9520	
Veg Storage Drawer	Yes		Block 9820	
Radius Doors	No			
Wall Cabinets	Yes			
Base Cabinets	Yes			
Tall Cabinets	Yes			
Vanity Cabinets	Yes			

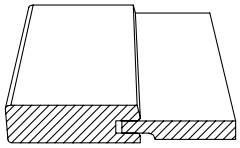

NOTES/CAUTIONS

1. 5-piece drawer header only available on drawer headers 5½" tall and greater.
2. Door and drawer hardware required.
3. No outside edge treatments available.
4. On Rustic Alder inset cabinetry, the doors and drawer headers are Rustic Alder and the face frames are standard Alder.
5. See Fullerton for overlay option.
6. The grain on the drawer header center panel runs horizontally.
7. Doors on these cabinets have 2¼" stiles: SCW21__, SBC33FS, SLSB33, ASCW2124, ASCW2421, ASBC__FS, SSSW33, ASSSW, SBC33.

© Copyright StarMark Cabinetry FEBRUARY 2022

GILLETTE

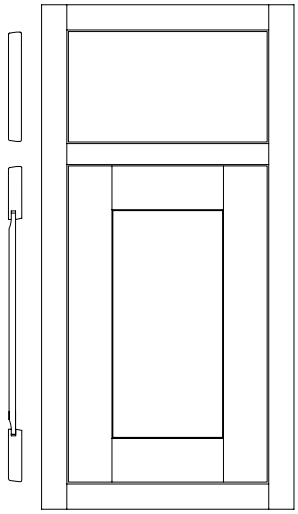

Standard slab drawer header

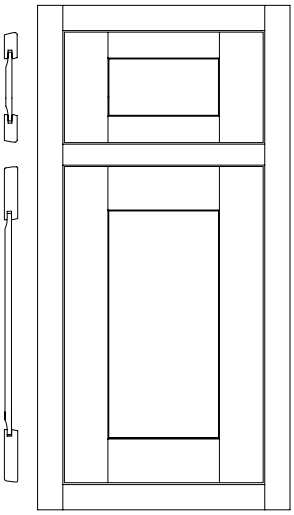

Optional 5-piece drawer header

Door Frame: ¾" thick square 2¼" stiles and rails
Door Center Panel: Solid ⅜" reverse flat panel
Drawer Header Center Panel: Solid ⅜" reverse flat panel on 5-piece drawer header
Drawer Header Stile Width: 2¼"
Drawer Header Rail Width: 1½"

Species	Alder	Cherry	Maple	
Price Column	11	11	11	
Species	Qtr. Sawn Oak		Rustic Alder	
Price Column	11		11	
Species	Walnut			
Price Column	12 +25%			
Construction Information				
Hinge	Finial or Concealed			
Inset Type	Beaded or Flush			
Door and Drawer Header	7 degree back-bevel			
Options	**Is it available?**			
5-Piece Header	Yes $93 per drawer header			
Profiled Header	No			
Furniture Pegs	Yes		Block 9800	
Insert Doors	Yes		Block 9500	
Mullion Doors	Yes		Block 9530	
Thornton Insert Door	Yes		Block 9520	
Veg Storage Drawer	Yes		Block 9820	
Radius Doors	No			
Wall Cabinets	Yes			
Base Cabinets	Yes			
Tall Cabinets	Yes			
Vanity Cabinets	Yes			

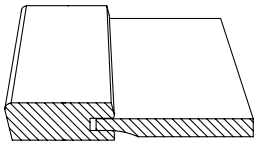

NOTES/CAUTIONS

1. 5-piece drawer header only available on drawer headers 5½" tall and greater.
2. Door and drawer hardware required.
3. No outside edge treatments available.
4. On Rustic Alder inset cabinetry, the doors and drawer headers are Rustic Alder and the face frames are standard Alder.
5. See Bonita for overlay option.
6. The grain on the drawer header center panel runs horizontally.

© Copyright StarMark Cabinetry **FEBRUARY 2022**

KNOTTINGHAM

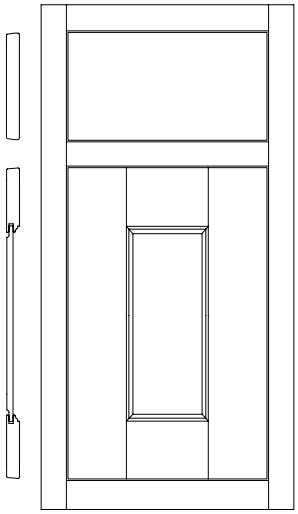

Standard slab drawer header

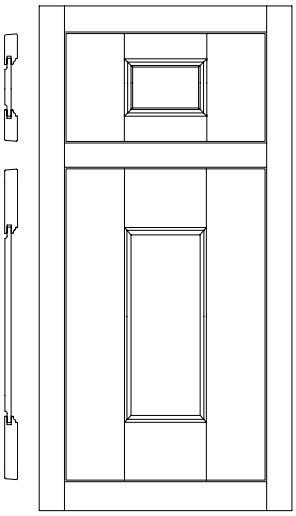

Optional 5-piece drawer header

Door Frame: ¾" thick square 3⅜" stiles and rails
Door Center Panel: Solid ⅜" reverse flat panel
Drawer Header Center Panel: Solid ⅜" reverse flat panel on 5-piece drawer header
Drawer Header Stile Width: 3⅜"
Drawer Header Rail Width: 1½"

Species	Alder	Cherry	Maple	
Price Column	11	11	11	
Species	Qtr. Sawn Oak		Rustic Alder	
Price Column	11		11	
Species	Walnut			
Price Column	12 +25%			
Construction Information				
Hinge	Finial or Concealed			
Inset Type	Beaded or Flush			
Door and Drawer Header	7 degree back-bevel			
Options	**Is it available?**			
5-Piece Header	Yes $93 per drawer header			
Profiled Header	No			
Furniture Pegs	Yes		Block 9800	
Insert Doors	Yes		Block 9500	
Mullion Doors	Yes		Block 9530	
Thornton Insert Door	Yes		Block 9520	
Veg Storage Drawer	Yes		Block 9820	
Radius Doors	No			
Wall Cabinets	Yes			
Base Cabinets	Yes			
Tall Cabinets	Yes			
Vanity Cabinets	Yes			

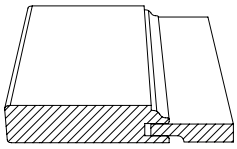

NOTES/CAUTIONS

1. 5-piece drawer header only available on drawer headers 5½" tall and greater.
2. Door and drawer hardware required.
3. No outside edge treatments available.
4. Doors on these cabinets have 2¼" stiles: SCW21__, SBC33FS, SLSB33, ASCW2124, ASCW2421, ASBC__FS, SSSW33, ASSSW, SBC33, 2VCC45__, TVSD24__, 2TVSD33__, 2TVSD36__, 2TVSD39__, 2TVCC45__.
5. Wide stiles are maintained on 15" and wider cabinets. For cabinets less than 15" in width, door stiles are reduced to 2¼".
6. On Rustic Alder inset cabinetry, the doors and drawer headers are Rustic Alder and the face frames are standard Alder.
7. See Medina for overlay option.
8. The grain on the drawer header center panel runs horizontally.

© Copyright StarMark Cabinetry FEBRUARY 2022

LAFAYETTE

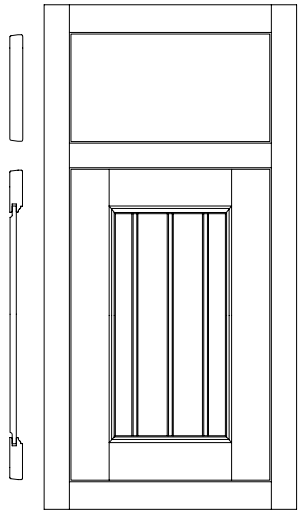

Standard slab drawer header

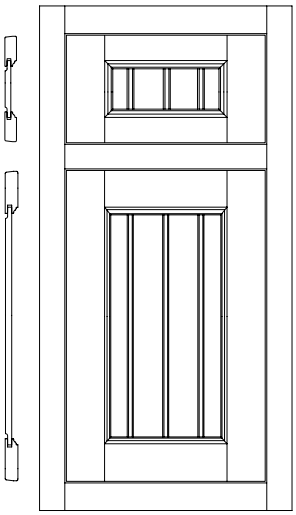

Optional 5-piece drawer header

Door Frame: ¾" thick square 2¼" stiles and rails
Door Center Panel: Solid ⅜" reverse flat panel
Drawer Header Center Panel: Solid ⅜" reverse flat panel on 5-piece drawer header
Drawer Header Stile Width: 2¼"
Drawer Header Rail Width: 1½"

Species	Alder	Cherry	Maple	
Price Column	11	11	11	
Species	Qtr. Sawn Oak		Rustic Alder	
Price Column	11		11	

Construction Information	
Hinge	Finial or Concealed
Inset Type	Beaded or Flush
Door and Drawer Header	7 degree back-bevel

Options	**Is it available?**	
5-Piece Header	Yes $93 per drawer header	
Profiled Header	No	
Furniture Pegs	Yes	Block 9800
Insert Doors	Yes	Block 9500
Mullion Doors	Yes	Block 9530
Thornton Insert Door	Yes	Block 9520
Veg Storage Drawer	Yes	Block 9820
Radius Doors	No	
Wall Cabinets	Yes	
Base Cabinets	Yes	
Tall Cabinets	Yes	
Vanity Cabinets	Yes	

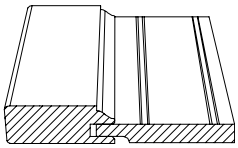

NOTES/CAUTIONS

1. 5-piece drawer header only available on drawer headers 5½" tall and greater.
2. Door and drawer hardware required.
3. No outside edge treatments available.
4. On Rustic Alder inset cabinetry, the doors and drawer headers are Rustic Alder and the face frames are standard Alder.
5. The grain on the drawer header center panel runs vertically.

© Copyright StarMark Cabinetry **FEBRUARY 2022**

LAFONTAINE

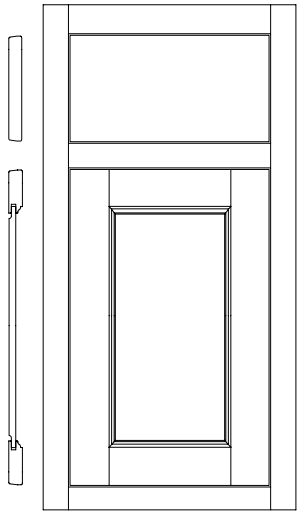

Standard slab drawer header

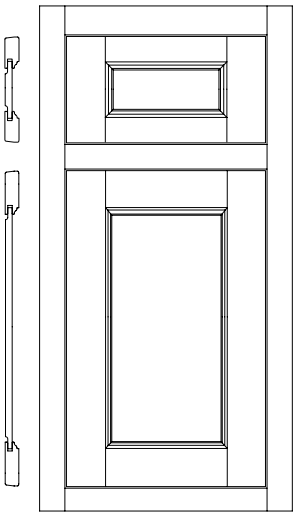

Optional 5-piece drawer header

Door Frame: ¾" thick square 2¼" stiles and rails
Door Center Panel: Solid ⅜" reverse flat panel
Drawer Header Center Panel: Solid ⅜" reverse flat panel on 5-piece drawer header
Drawer Header Stile Width: 2¼"
Drawer Header Rail Width: 1½"

Species	Alder	Cherry	Maple	
Price Column	11	11	11	
Species	Qtr. Sawn Oak		Rustic Alder	
Price Column	11		11	
Species	Walnut			
Price Column	12 +25%			

Construction Information	
Hinge	Finial or Concealed
Inset Type	Beaded or Flush
Door and Drawer Header	7 degree back-bevel
Options	**Is it available?**
5-Piece Header	Yes $93 per drawer header
Profiled Header	No
Furniture Pegs	Yes Block 9800
Insert Doors	Yes Block 9500
Mullion Doors	Yes Block 9530
Thornton Insert Door	Yes Block 9520
Veg Storage Drawer	Yes Block 9820
Radius Doors	No
Wall Cabinets	Yes
Base Cabinets	Yes
Tall Cabinets	Yes
Vanity Cabinets	Yes

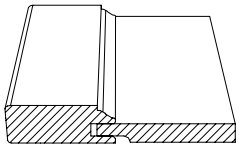

NOTES/CAUTIONS

1. 5-piece drawer header only available on drawer headers 5½" tall and greater.
2. Door and drawer hardware required.
3. No outside edge treatments available.
4. On Rustic Alder inset cabinetry, the doors and drawer headers are Rustic Alder and the face frames are standard Alder.
5. See Stockton for overlay option.
6. The grain on the drawer header center panel runs horizontally.

© Copyright StarMark Cabinetry FEBRUARY 2022

LAFOREST

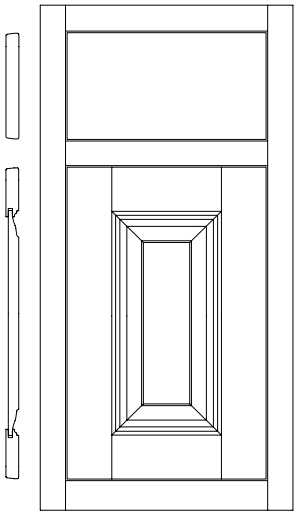

Standard slab drawer header

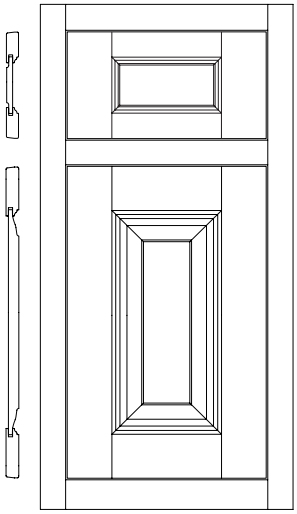

Optional 5-piece drawer header

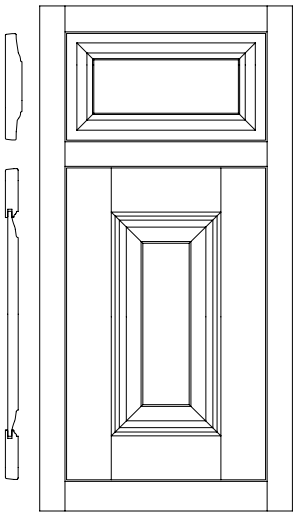

Optional profiled drawer header

Door Frame: ¾" thick square 2¼" stiles and rails
Door Center Panel: Solid ⅝" raised panel
Drawer Header Center Panel: Solid ⅜" reverse flat panel on 5-piece drawer header
Drawer Header Stile Width: 2¼"
Drawer Header Rail Width: 1½"

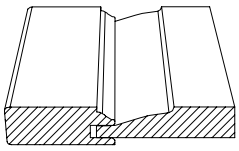

Species	Alder	Cherry	Maple	
Price Column	11	11	11	
Species	Qtr. Sawn Oak		Rustic Alder	
Price Column	11		11	
Species	Walnut			
Price Column	12 +25%			

Construction Information	
Hinge	Finial or Concealed
Inset Type	Beaded or Flush
Door and Drawer Header	7 degree back-bevel
Options	**Is it available?**
5-Piece Header	Yes $93 per drawer header
Profiled Header	Yes $33 per drawer header
Furniture Pegs	Yes Block 9800
Insert Doors	Yes Block 9500
Mullion Doors	Yes Block 9530
Thornton Insert Door	Yes Block 9520
Veg Storage Drawer	Yes Block 9820
Radius Doors	No
Wall Cabinets	Yes
Base Cabinets	Yes
Tall Cabinets	Yes
Vanity Cabinets	Yes

NOTES/CAUTIONS

1. 5-piece drawer header only available on drawer headers 5½" tall and greater.
2. Door and drawer hardware required.
3. No outside edge treatments available.
4. Profiled header thickness is 1".
5. On Rustic Alder inset cabinetry, the doors and drawer headers are Rustic Alder and the face frames are standard Alder.
6. The grain on the drawer header center panel runs horizontally.
7. ⅝" raised panel on 5-piece drawer header 6½" tall and greater.
8. See Lehigh for overlay option.

© Copyright StarMark Cabinetry **FEBRUARY 2022**

LIBERTY NEW!

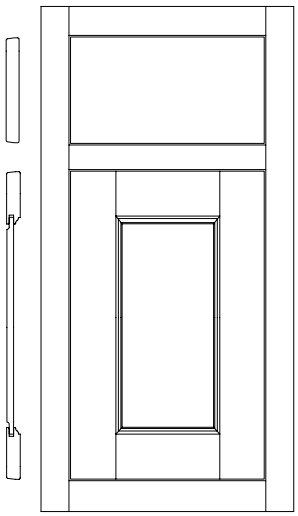

Standard slab drawer header

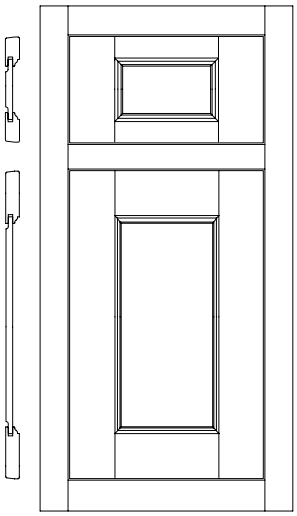

Optional 5-piece drawer header

Door Frame: ¾" thick square 2¾" stiles and rails
Door Center Panel: Solid ⅜" reverse flat panel
Drawer Header Center Panel: Solid ⅜" reverse flat panel on 5-piece drawer header
Drawer Header Stile Width: 2¾"
Drawer Header Rail Width: 1½"

Species	Alder	Cherry	Maple	
Price Column	11	11	11	
Species	Qtr. Sawn Oak		Rustic Alder	
Price Column	12		11	
Species	Walnut			
Price Column	12 +25%			
Construction Information				
Hinge	Finial or Concealed			
Inset Type	Beaded or Flush			
Door and Drawer Header	7 degree back-bevel			
Options	**Is it available?**			
5-Piece Header	Yes $93 per drawer header			
Profiled Header	No			
Furniture Pegs	Yes		Block 9800	
Insert Doors	Yes		Block 9500	
Mullion Doors	Yes		Block 9530	
Thornton Insert Door	Yes		Block 9520	
Veg Storage Drawer	Yes		Block 9820	
Radius Doors	No			
Wall Cabinets	Yes			
Base Cabinets	Yes			
Tall Cabinets	Yes			
Vanity Cabinets	Yes			

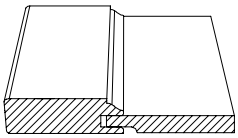

NOTES/CAUTIONS

1. 5-piece drawer header only available on drawer headers 5½" tall and greater.
2. Door and drawer hardware required.
3. No outside edge treatments available.
4. On Rustic Alder inset cabinetry, the doors and drawer headers are Rustic Alder and the face frames are standard Alder.
5. See Tipton for overlay option.
6. The grain on the drawer header center panel runs horizontally.

© Copyright StarMark Cabinetry FEBRUARY 2022

MACKAY

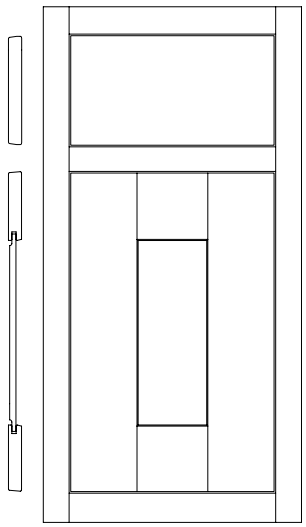

Standard slab drawer header

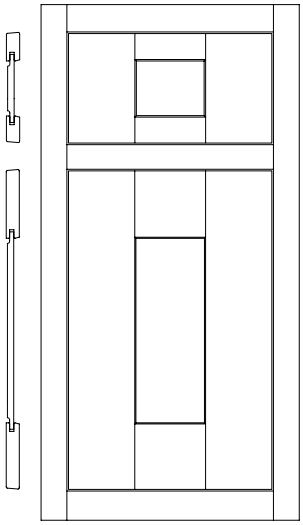

Optional 5-piece drawer header

Door Frame: ¾" thick square 3⅜" stiles and rails
Door Center Panel: Solid ⅜" reverse flat panel
Drawer Header Center Panel: Solid ⅜" reverse flat panel on 5-piece drawer header
Drawer Header Stile Width: 3⅜"
Drawer Header Rail Width: 1½"

Species	Alder	Cherry	Maple	
Price Column	11	11	11	
Species	Qtr. Sawn Oak		Rustic Alder	
Price Column	11		11	
Species	Walnut			
Price Column	12 +25%			
Construction Information				
Hinge	Finial or Concealed			
Inset Type	Beaded or Flush			
Door and Drawer Header	7 degree back-bevel			
Options	**Is it available?**			
5-Piece Header	Yes $93 per drawer header			
Profiled Header	No			
Furniture Pegs	Yes		Block 9800	
Insert Doors	Yes		Block 9500	
Mullion Doors	Yes		Block 9530	
Thornton Insert Door	Yes		Block 9520	
Veg Storage Drawer	Yes		Block 9820	
Radius Doors	No			
Wall Cabinets	Yes			
Base Cabinets	Yes			
Tall Cabinets	Yes			
Vanity Cabinets	Yes			

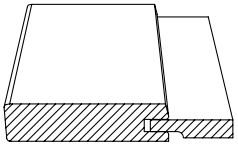

NOTES/CAUTIONS

1. 5-piece drawer header only available on drawer headers 5½" tall and greater.
2. Door and drawer hardware required.
3. No outside edge treatments available.
4. Doors on these cabinets have 2¼" stiles: SCW21_, SBC33FS, SLSB33, ASCW2124, ASCW2421, ASBC_FS, SSSW33, ASSSW, SBC33, 2VCC45__, TVSD24__, 2TVSD33__, 2TVSD36__, 2TVSD39__, 2TVCC45__.
5. Wide stiles are maintained on 15" and wider cabinets. For cabinets less than 15" in width, door stiles are reduced to 2¼".
6. On Rustic Alder inset cabinetry, the doors and drawer headers are Rustic Alder and the face frames are standard Alder.
7. See Manhattan for overlay option.
8. The grain on the drawer header center panel runs horizontally.

© Copyright StarMark Cabinetry FEBRUARY 2022

MERRIMAC

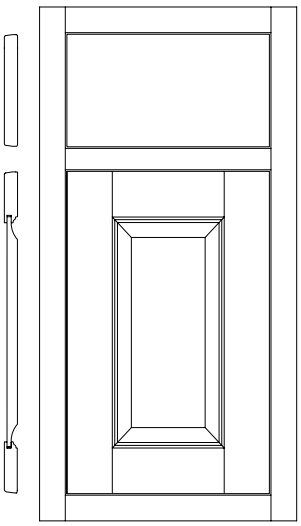

Standard slab drawer header

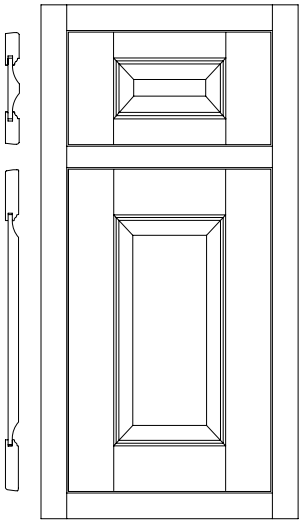

Optional 5-piece drawer header

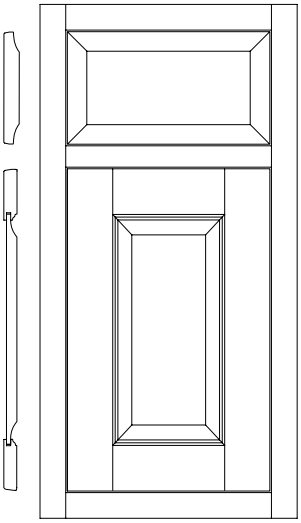

Optional profiled drawer header

Door Frame: ¾" thick square 2¼" stiles and rails
Door Center Panel: Solid ⅝" raised panel
Drawer Header Center Panel: Solid ⅝" raised panel on 5-piece drawer header
Drawer Header Stile Width: 2¼"
Drawer Header Rail Width: 1½"

Species	Alder	Cherry	Maple	
Price Column	11	11	11	
Species	Qtr. Sawn Oak		Rustic Alder	
Price Column	11		11	
Species	Walnut			
Price Column	12 +25%			
Construction Information				
Hinge	Finial or Concealed			
Inset Type	Beaded or Flush			
Door and Drawer Header	7 degree back-bevel			
Options	**Is it available?**			
5-Piece Header	Yes $93 per drawer header			
Profiled Header	Yes $33 per drawer header			
Furniture Pegs	Yes		Block 9800	
Insert Doors	Yes		Block 9500	
Mullion Doors	Yes		Block 9530	
Thornton Insert Door	Yes		Block 9520	
Veg Storage Drawer	Yes		Block 9820	
Radius Doors	No			
Wall Cabinets	Yes			
Base Cabinets	Yes			
Tall Cabinets	Yes			
Vanity Cabinets	Yes			

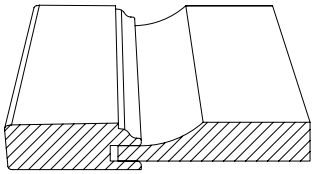

NOTES/CAUTIONS

1. 5-piece drawer header only available on drawer headers 5½" tall and greater.
2. Door and drawer hardware required.
3. No outside edge treatments available.
4. On Rustic Alder inset cabinetry, the doors and drawer headers are Rustic Alder and the face frames are standard Alder.
5. See Breckenridge for overlay option.
6. The grain on the drawer header center panel runs horizontally.

© Copyright StarMark Cabinetry FEBRUARY 2022

MONTICO

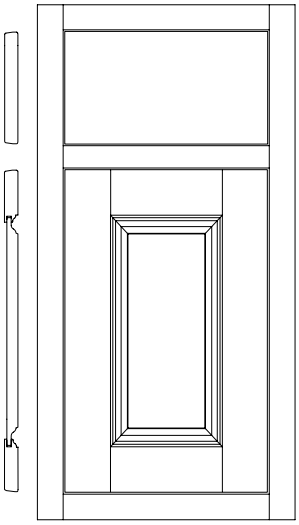

Standard slab drawer header

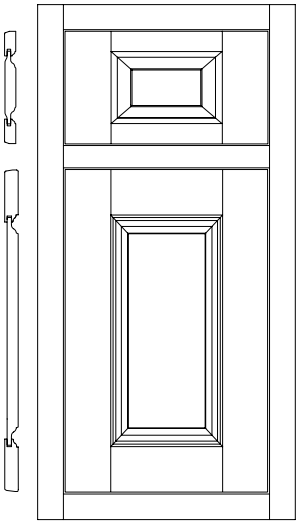

Optional 5-piece drawer header

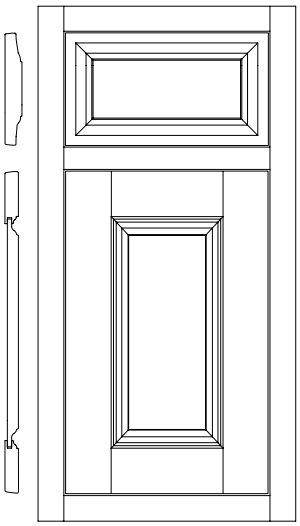

Optional profiled drawer header

Door Frame: ¾″ thick square 2¼″ stiles and rails
Door Center Panel: Solid ⅝″ raised panel
Drawer Header Center Panel: Solid ⅝″ raised panel on 5-piece drawer header
Drawer Header Stile Width: 2¼″
Drawer Header Rail Width: 1½″

Species	Alder	Cherry	Maple	
Price Column	11	11	11	
Species	Qtr. Sawn Oak		Rustic Alder	
Price Column	11		11	
Species	Walnut			
Price Column	12 +25%			

Construction Information	
Hinge	Finial or Concealed
Inset Type	Beaded or Flush
Door and Drawer Header	7 degree back-bevel

Options	**Is it available?**	
5-Piece Header	Yes $93 per drawer header	
Profiled Header	Yes $33 per drawer header	
Furniture Pegs	Yes	Block 9800
Insert Doors	Yes	Block 9500
Mullion Doors	Yes	Block 9530
Thornton Insert Door	Yes	Block 9520
Veg Storage Drawer	Yes	Block 9820
Radius Doors	No	
Wall Cabinets	Yes	
Base Cabinets	Yes	
Tall Cabinets	Yes	
Vanity Cabinets	Yes	

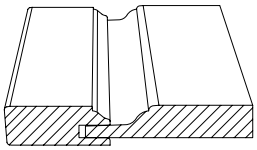

NOTES/CAUTIONS

1. 5-piece drawer header only available on drawer headers 5½″ tall and greater.
2. Door and drawer hardware required.
3. No outside edge treatments available.
4. On Rustic Alder inset cabinetry, the doors and drawer headers are Rustic Alder and the face frames are standard Alder.
5. See Accord for overlay option.
6. The grain on the drawer header center panel runs horizontally.

© Copyright StarMark Cabinetry **FEBRUARY 2022**

Inset Cabinetry Specifications

REYNOLDS NEW!

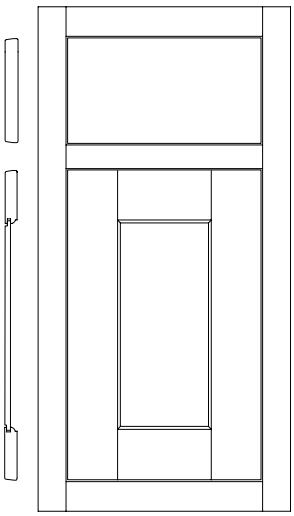

Standard slab drawer header

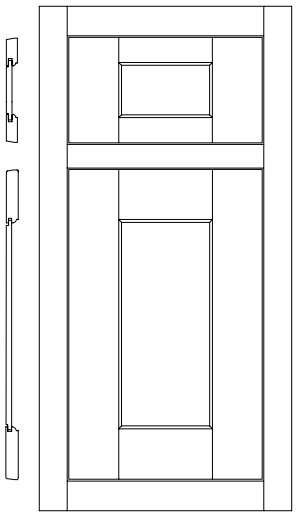

Optional 5-piece drawer header

Door Frame: ¾" thick square 2¾" stiles and rails
Door Center Panel: Solid ⅜" reverse flat panel
Drawer Header Center Panel: Solid ⅜" reverse flat panel on 5-piece drawer header
Drawer Header Stile Width: 2¾"
Drawer Header Rail Width: 1½"

Species	Alder	Cherry	Maple	
Price Column	11	11	11	
Species	Qtr. Sawn Oak		Rustic Alder	
Price Column	12		11	
Species	Walnut			
Price Column	12 +25%			
Construction Information				
Hinge	Finial or Concealed			
Inset Type	Beaded or Flush			
Door and Drawer Header	7 degree back-bevel			
Options	**Is it available?**			
5-Piece Header	Yes $93 per drawer header			
Profiled Header	No			
Furniture Pegs	Yes		Block 9800	
Insert Doors	Yes		Block 9500	
Mullion Doors	Yes		Block 9530	
Thornton Insert Door	Yes		Block 9520	
Veg Storage Drawer	Yes		Block 9820	
Radius Doors	No			
Wall Cabinets	Yes			
Base Cabinets	Yes			
Tall Cabinets	Yes			
Vanity Cabinets	Yes			

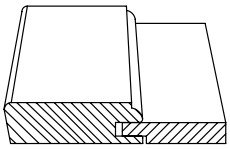

NOTES/CAUTIONS

1. 5-piece drawer header only available on drawer headers 5½" tall and greater.
2. Door and drawer hardware required.
3. No outside edge treatments available.
4. On Rustic Alder inset cabinetry, the doors and drawer headers are Rustic Alder and the face frames are standard Alder.
5. See Renwick for overlay option.
6. The grain on the drawer header center panel runs horizontally.

© Copyright StarMark Cabinetry FEBRUARY 2022

ROCHEPORT

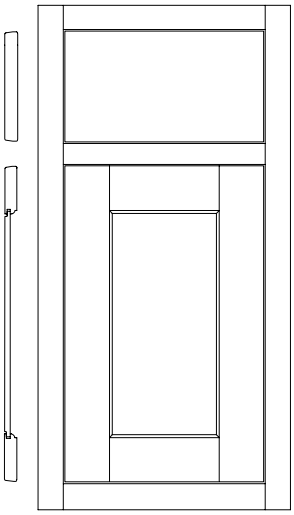

Standard slab drawer header

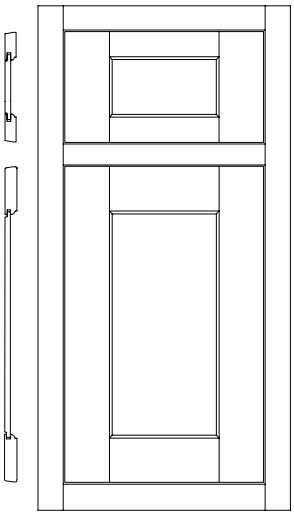

Optional 5-piece drawer header

Door Frame: ¾" thick square 2¼" stiles and rails
Door Center Panel: Solid ⅜" reverse flat panel
Drawer Header Center Panel: Solid ⅜" reverse flat panel on 5-piece drawer header
Drawer Header Stile Width: 2¼"
Drawer Header Rail Width: 1½"

Species	Alder	Cherry	Maple	
Price Column	11	11	11	
Species	Qtr. Sawn Oak		Rustic Alder	
Price Column	11		11	
Species	Walnut			
Price Column	12 +25%			

Construction Information	
Hinge	Finial or Concealed
Inset Type	Beaded or Flush
Door and Drawer Header	7 degree back-bevel

Options	**Is it available?**	
5-Piece Header	Yes $93 per drawer header	
Profiled Header	No	
Furniture Pegs	Yes	Block 9800
Insert Doors	Yes	Block 9500
Mullion Doors	Yes	Block 9530
Thornton Insert Door	Yes	Block 9520
Veg Storage Drawer	Yes	Block 9820
Radius Doors	No	
Wall Cabinets	Yes	
Base Cabinets	Yes	
Tall Cabinets	Yes	
Vanity Cabinets	Yes	

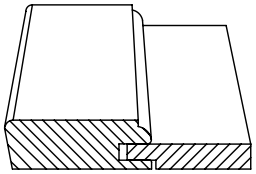

NOTES/CAUTIONS

1. 5-piece drawer header only available on drawer headers 5½" tall and greater.
2. Door and drawer hardware required.
3. No outside edge treatments available.
4. On Rustic Alder inset cabinetry, the doors and drawer headers are Rustic Alder and the face frames are standard Alder.
5. See Roanoke for overlay option.
6. The grain on the drawer header center panel runs horizontally.

© Copyright StarMark Cabinetry FEBRUARY 2022

ROCK ELM

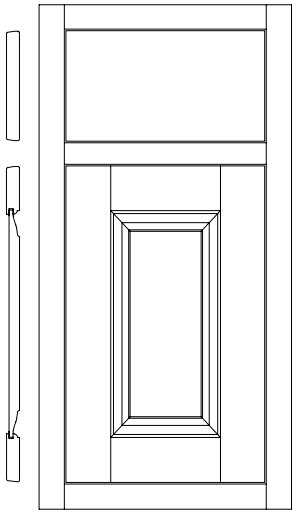

Standard slab drawer header

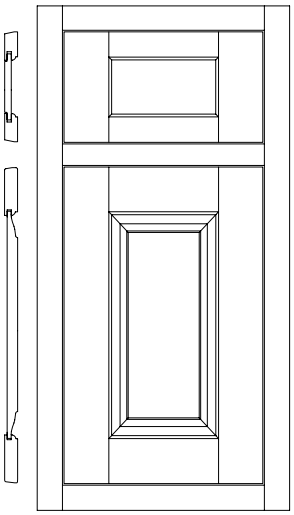

Optional 5-piece drawer header

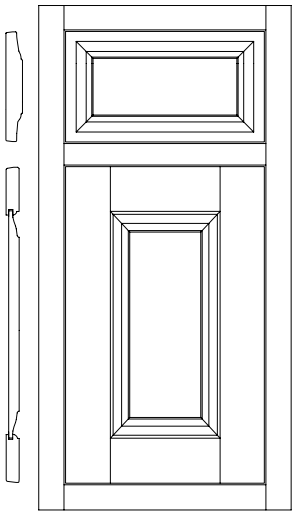

Optional profiled drawer header

Door Frame: ¾" thick square 2¼" stiles and rails
Door Center Panel: Solid ⅝" raised panel
Drawer Header Center Panel: Solid ⅜" reverse flat panel on 5-piece drawer header
Drawer Header Stile Width: 2¼"
Drawer Header Rail Width: 1½"

Species	Alder	Cherry	Maple	
Price Column	11	11	11	
Species	Qtr. Sawn Oak		Rustic Alder	
Price Column	11		11	
Species	Walnut			
Price Column	12 +25%			
Construction Information				
Hinge	Finial or Concealed			
Inset Type	Beaded or Flush			
Door and Drawer Header	7 degree back-bevel			
Options	**Is it available?**			
5-Piece Header	Yes $93 per drawer header			
Profiled Header	Yes $33 per drawer header			
Furniture Pegs	Yes		Block 9800	
Insert Doors	Yes		Block 9500	
Mullion Doors	Yes		Block 9530	
Thornton Insert Door	Yes		Block 9520	
Veg Storage Drawer	Yes		Block 9820	
Radius Doors	No			
Wall Cabinets	Yes			
Base Cabinets	Yes			
Tall Cabinets	Yes			
Vanity Cabinets	Yes			

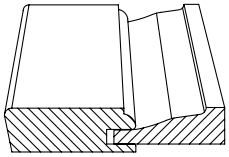

NOTES/CAUTIONS

1. 5-piece drawer header only available on drawer headers 5½" tall and greater.
2. Door and drawer hardware required.
3. No outside edge treatments available.
4. On Rustic Alder inset cabinetry, the doors and drawer headers are Rustic Alder and the face frames are standard Alder.
5. See Ridgeville for overlay option.
6. The grain on the drawer header center panel runs horizontally.
7. ⅝" raised panel on 5-piece drawer header 6½" tall and greater.

© Copyright StarMark Cabinetry **FEBRUARY 2022**

RUTLAND NEW!

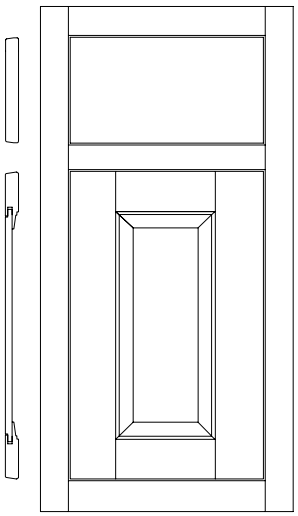

Standard slab drawer header

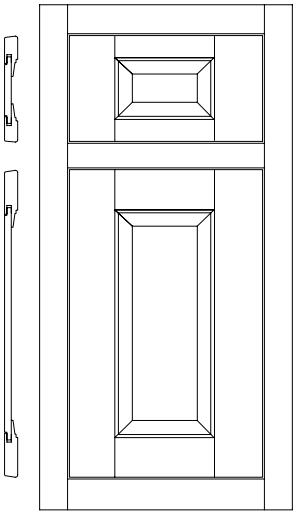

Optional 5-piece drawer header

Door Frame: ¾" thick square 3¼" stiles and rails
Door Center Panel: Solid ⅜" reverse flat panel
Drawer Header Center Panel: Solid ⅜" reverse flat panel on 5-piece drawer header
Drawer Header Stile Width: 3¼"
Drawer Header Rail Width: 1⅞"

Species	Alder	Cherry	Maple	
Price Column	12	12	12	
Species	Qtr. Sawn Oak		Rustic Alder	
Price Column	12		12	
Construction Information				
Hinge	Finial or Concealed			
Inset Type	Beaded or Flush			
Door and Drawer Header	7 degree back-bevel			
Options	**Is it available?**			
5-Piece Header	Yes $93 per drawer header			
Profiled Header	No			
Furniture Pegs	Yes		Block 9800	
Insert Doors	Yes		Block 9500	
Mullion Doors	Yes		Block 9530	
Thornton Insert Door	Yes		Block 9520	
Veg Storage Drawer	Yes		Block 9820	
Radius Doors	No			
Wall Cabinets	Yes			
Base Cabinets	Yes			
Tall Cabinets	Yes			
Vanity Cabinets	Yes			

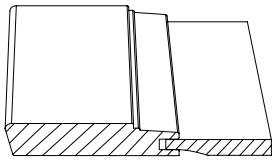

NOTES/CAUTIONS

1. 5-piece drawer header only available on drawer headers 5½" tall and greater.
2. Door and drawer hardware required.
3. No outside edge treatments available.
4. On Rustic Alder inset cabinetry, the doors and drawer headers are Rustic Alder and the face frames are standard Alder.
5. See Remington for overlay option.
6. The grain on the drawer header center panel runs horizontally.

© Copyright StarMark Cabinetry FEBRUARY 2022

TERRA NEW!

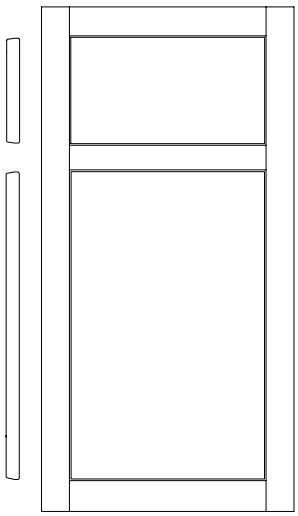

Standard slab drawer header

Material: Door and drawer header are .720" solid MDF

Species	MDF	
Price Column	11	
Construction Information		
Hinge	Finial or Concealed	
Inset Type	Beaded or Flush	
Door and Drawer Header	7 degree back-bevel	
Options	**Is it available?**	
5-Piece Header	No	
Profiled Header	No	
Furniture Pegs	No	
Insert Doors	Yes Built with Maple Gillette style door	Block 9500
Mullion Doors	Yes Built with Maple Gillette style door	Block 9530
Thornton Insert Door	No	
Veg Storage Drawer	Yes Built with Maple Gillette style header	Block 9820
Radius Doors	No	
Wall Cabinets	Yes	
Base Cabinets	Yes	
Tall Cabinets	Yes	
Vanity Cabinets	Yes	

NOTES/CAUTIONS

1. Door and drawer hardware required.
2. The cabinet face frame is ¾" solid Maple
3. No outside edge treatments available.
4. The Terra door style is only available in straight Tinted Varnish finishes (without glaze).
5. See Tama for overlay option.

© Copyright StarMark Cabinetry FEBRUARY 2022

VICTOR

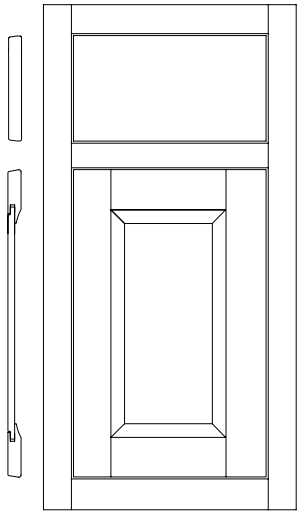

Standard slab drawer header

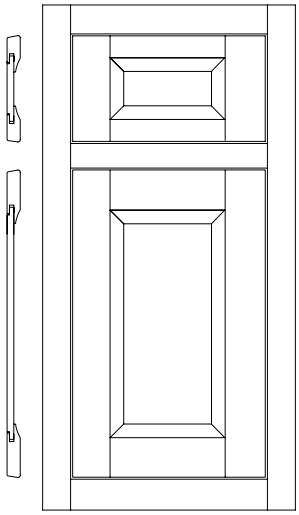

Optional 5-piece drawer header

Door Frame: ¾″ thick square 2¾″ stiles and rails
Door Center Panel: Solid ⅜″ reverse flat panel
Drawer Header Center Panel: Solid ⅜″ reverse flat panel on 5-piece drawer header
Drawer Header Stile Width: 2¾″
Drawer Header Rail Width: 1⅞″

Species	Alder	Cherry	Maple
Price Column	12	12	12

Species	Qtr. Sawn Oak	Rustic Alder
Price Column	12	12

Construction Information	
Hinge	Finial or Concealed
Inset Type	Beaded or Flush
Door and Drawer Header	7 degree back-bevel

Options	**Is it available?**	
5-Piece Header	Yes $93 per drawer header	
Profiled Header	No	
Furniture Pegs	Yes	Block 9800
Insert Doors	Yes	Block 9500
Mullion Doors	Yes	Block 9530
Thornton Insert Door	Yes	Block 9520
Veg Storage Drawer	Yes	Block 9820
Radius Doors	No	
Wall Cabinets	Yes	
Base Cabinets	Yes	
Tall Cabinets	Yes	
Vanity Cabinets	Yes	

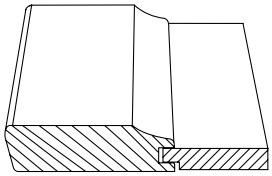

NOTES/CAUTIONS

1. 5-piece drawer header only available on drawer headers 5½″ tall and greater.
2. Door and drawer hardware required.
3. No outside edge treatments available.
4. On Rustic Alder inset cabinetry, the doors and drawer headers are Rustic Alder and the face frames are standard Alder.
5. See Vail for overlay option.
6. The grain on the drawer header center panel runs horizontally.

© Copyright StarMark Cabinetry **FEBRUARY 2022**

WINTERHAVEN

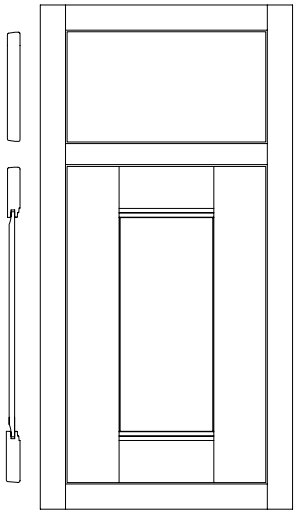

Standard slab drawer header

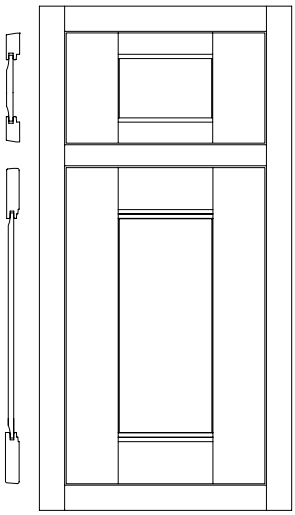

Optional 5-piece drawer header

Door Frame: ¾" thick square 2¾" stiles and rails
Door Center Panel: Solid ⅜" reverse flat panel
Drawer Header Center Panel: Solid ⅜" reverse flat panel on 5-piece drawer header
Drawer Header Stile Width: 2¾"
Drawer Header Rail Width: 1½"

Species	Alder	Cherry	Maple	
Price Column	11	11	11	
Species	Qtr. Sawn Oak		Rustic Alder	
Price Column	11		11	

Construction Information	
Hinge	Finial or Concealed
Inset Type	Beaded or Flush
Door and Drawer Header	7 degree back-bevel
Options	**Is it available?**
5-Piece Header	Yes $93 per drawer header
Profiled Header	No
Furniture Pegs	Yes Block 9800
Insert Doors	Yes Block 9500
Mullion Doors	Yes Block 9530
Thornton Insert Door	Yes Block 9520
Veg Storage Drawer	Yes Block 9820
Radius Doors	No
Wall Cabinets	Yes
Base Cabinets	Yes
Tall Cabinets	Yes
Vanity Cabinets	Yes

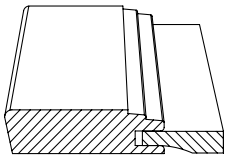

Door rail and center panel shown

NOTES/CAUTIONS

1. 5-piece drawer header only available on drawer headers 5½" tall and greater.
2. Single step inside profile on 5-piece header, to accommodate hardware placement. The door has a double step inside profile.
3. Door and drawer hardware required.
4. No outside edge treatments available.
5. On Rustic Alder inset cabinetry, the doors and drawer headers are Rustic Alder and the face frames are standard Alder.
6. See Waterfall for overlay option.
7. The grain on the drawer header center panel runs horizontally.
8. Doors on these cabinets have 2¼" stiles: SCW21__, SBC33FS, SLSB33, ASCW2124, ASCW2421, ASBC__FS, SSSW33, ASSSW, SBC33.

© Copyright StarMark Cabinetry FEBRUARY 2022

XENON

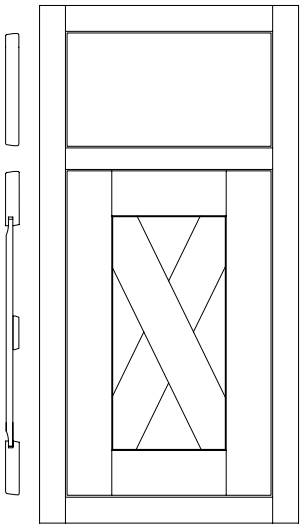

Standard slab drawer header

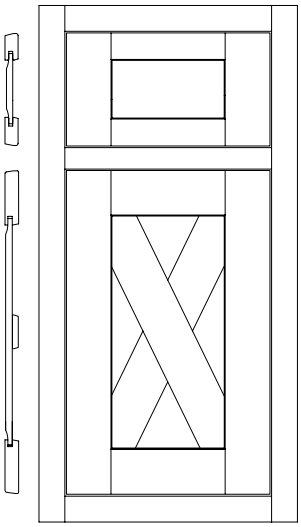

Optional 5-piece drawer header

Door Frame: ¾″ thick square 2¼″ stiles and rails
Door Center Panel: ¼″ plywood veneer
Drawer Header Center Panel: Solid ⅜″ reverse flat panel on 5-piece drawer header
Drawer Header Stile Width: 2¼″
Drawer Header Rail Width: 1½″

Species	Alder	Cherry	Maple	
Price Column	12	12	12	
Species	Qtr. Sawn Oak		Rustic Alder	
Price Column	12		12	
Construction Information				
Hinge	Finial or Concealed			
Inset Type	Beaded or Flush			
Door and Drawer Header	7 degree back-bevel			
Options	**Is it available?**			
5-Piece Header	Yes $93 per drawer header			
Profiled Header	No			
Furniture Pegs	Yes		Block 9800	
Insert Doors	Yes		Block 9500	
Mullion Doors	Yes Built with Gillette style door		Block 9530	
Thornton Insert Door	Yes		Block 9520	
Veg Storage Drawer	Yes		Block 9820	
Radius Doors	No			
Wall Cabinets	Yes			
Base Cabinets	Yes			
Tall Cabinets	Yes			
Vanity Cabinets	Yes			

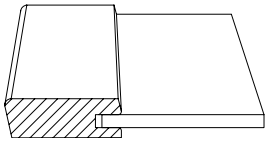

NOTES/CAUTIONS

1. 5-piece drawer header only available on drawer headers 5½″ tall and greater.
2. Door and drawer hardware required.
3. No outside edge treatments available.
4. On Rustic Alder inset cabinetry, the doors and drawer headers are Rustic Alder and the face frames are standard Alder.
5. See Xavier for overlay option.
6. On Rustic doors, the door frame and the X crossmembers are rustic. The center panel is not rustic.
7. Doors less than 10⅜″ in width are built without X crossmembers.
8. The grain on the drawer header center panel runs horizontally.
9. The Xenon door style is not available in the Villa finish.

© Copyright StarMark Cabinetry **FEBRUARY 2022**

INSET DOOR STYLE OPTIONS

Specie and Style Options	Doors																												
	Addison	Alexandria	Allentown	Amsdahl	Annabella	Ballinger	Cambridge	Charlotte	Claymont	Danburg	DeWitt	Evaro	Fairhaven	Gillette	Knottingham	Lafayette	Lafontaine	Laforest	Liberty	Mackay	Merrimac	Montico	Reynolds	Rocheport	Rock Elm	Rutland	Terra	Victor	Winterhaven	Xenon
Species Options																														
Alder	X	X	X	X	X	X	X	X	X	X	X	X	X	X	X	X	X	X	X	X	X	X	X	X	X	X		X	X	X
Cherry	X	X	X	X	X	X	X	X	X	X	X	X	X	X	X	X	X	X	X	X	X	X	X	X	X	X		X	X	X
Maple	X	X	X	X	X	X	X	X	X	X	X	X	X	X	X	X	X	X	X	X	X	X	X	X	X	X		X	X	X
MDF																											X			
Quarter Sawn Oak	X	X	X	X	X	X	X	X	X	X	X	X	X	X	X	X	X	X	X	X	X	X	X	X	X	X		X	X	X
Rustic Alder	X	X	X	X	X	X		X	X	X	X	X	X	X	X	X	X	X	X	X	X	X	X	X	X	X		X	X	X
Walnut								X	X	X	X		X	X	X		X	X	X	X	X	X	X	X	X					
Styling Options																														
Five (5) Piece Drawer Header	X	X	X	X	X	X	X	X	X	X	X	X	X	X	X	X	X	X	X	X	X	X	X	X	X	X	X	X	X	X
Furniture Pegs	X	X	X	X	X	X	X	X	X	X	X	X	X	X	X	X	X	X	X	X	X	X	X	X	X	X	X	X	X	X
Profiled Drawer Header			X							X								X			X	X			X					
Frame Options																														
Beaded Inset	X	X	X	X	X	X	X	X	X	X	X	X	X	X	X	X	X	X	X	X	X	X	X	X	X	X	X	X	X	X
Flush Inset	X	X	X	X	X	X	X	X	X	X	X	X	X	X	X	X	X	X	X	X	X	X	X	X	X	X	X	X	X	X
Hinge Options																														
Finial	X	X	X	X	X	X	X	X	X	X	X	X	X	X	X	X	X	X	X	X	X	X	X	X	X	X	X	X	X	X
Concealed	X	X	X	X	X	X	X	X	X	X	X	X	X	X	X	X	X	X	X	X	X	X	X	X	X	X	X	X	X	X

© Copyright StarMark Cabinetry FEBRUARY 2022

ALDER: Available Inset Door Styles and Finishes

Alder and Rustic Alder inset door styles

- Addison ❖ NEW!
- Alexandria ❖
- Allentown ❖
- Amsdahl ❖
- Annabella ❖ NEW!
- Ballinger ❖ NEW!
- Cambridge ❖ NEW!
- Charlotte ❖
- Claymont ❖ NEW!
- Danburg ❖
- DeWitt ❖
- Evaro ❖ NEW!
- Fairhaven ❖
- Gillette ❖
- Knottingham ❖
- Lafayette ❖
- Lafontaine ❖
- Laforest ❖
- Liberty ❖ NEW!
- Mackay ❖
- Merrimac ❖
- Montico ❖
- Reynolds ❖ NEW!
- Rocheport ❖
- Rock Elm ❖
- Rutland ❖ NEW!
- Victor ❖ NEW!
- Winterhaven ❖
- Xenon ❖

❖ RUSTIC ALDER

Doors marked with ❖ are available in Rustic Alder. There is no upcharge for Rustic Alder.

Please Note:
On RUSTIC ALDER INSET CABINETRY, the doors and drawer headers are RUSTIC ALDER and the face frames are STANDARD ALDER.

! A FF&D sample door is the best way to illustrate Homestead. We encourage you to order a FF&D sample door.

All Alder and Rustic Alder inset door styles are available with any of the finishes listed below:

- Brittany
- Brittany Chocolate▲
- Brittany Ebony▲
- Butterscotch
- Butterscotch Chocolate▲
- Butterscotch Ebony▲
- Cappuccino
- Cappuccino Chocolate▲
- Carbon
- Chestnut
- Chestnut Ebony▲
- Driftwood
- Driftwood Chocolate▲
- Driftwood Ebony▲
- Harvest
- Harvest Chocolate▲
- Harvest Ebony▲
- Hazelnut
- Hazelnut Ebony▲
- Java
- Mocha
- Mocha Ebony▲
- Natural
- Natural Chocolate▲
- Nutmeg
- Nutmeg Chocolate▲
- Nutmeg Ebony▲
- Oregano
- Oregano Chocolate▲
- Oregano Ebony▲
- Rattan
- Rattan Chocolate▲
- Rattan Ebony▲
- Rye
- Rye Ebony▲
- Slate
- Slate Chocolate▲
- Slate Ebony▲
- Slate Nickel
- Tarragon
- Tarragon Chocolate▲
- Tarragon Ebony▲
- Toffee
- Toffee Chocolate▲
- Toffee Ebony▲
- Unfinished

Specialty

- Antiquity Driftwood
- Antiquity Fog
- Antiquity Oregano
- Antiquity Peppercorn
- Antiquity Slate
- Homestead Blueberry NEW!
- Homestead Fog

▲Finishes available with Old World Distressing

Inset Cabinetry is available in Custom finishes.
See S-20-23 for details.

GLAZING
Upcharge 10%

LIGHT CHAIN DISTRESSING
Upcharge 10%

MATTE TOP COAT NEW!
Upcharge 5%

There is no upcharge for Matte Top Coat on a Stain with Glaze or on Antiquity Driftwood, Oregano or Slate.

SPATTERING
Upcharge 10%

There is no upcharge for Spattering on a Stain with Glaze.

HOMESTEAD
Upcharge 15%

OLD WORLD DISTRESSING
Upcharge 15%

ANTIQUITY
Upcharge 15%

© Copyright StarMark Cabinetry FEBRUARY 2022

CHERRY: Available Inset Door Styles and Finishes

Cherry inset door styles

- Addison NEW!
- Alexandria
- Allentown
- Amsdahl
- Annabella NEW!
- Ballinger NEW!
- Cambridge NEW!
- Charlotte
- Claymont NEW!
- Danburg
- DeWitt
- Evaro NEW!
- Fairhaven
- Gillette
- Knottingham
- Lafayette
- Lafontaine
- Laforest
- Liberty NEW!
- Mackay
- Merrimac
- Montico
- Reynolds NEW!
- Rocheport
- Rock Elm
- Rutland NEW!
- Victor NEW!
- Winterhaven
- Xenon

Inset Cabinetry is available in Custom finishes. See S-20-23 for details.

! A FF&D sample door is the best way to illustrate Chateaux. We encourage you to order a FF&D sample door.

All Cherry inset door styles are available with any of the stain finishes listed below:

- Brittany
- Brittany Chocolate▲
- Brittany Ebony▲
- Butterscotch
- Butterscotch Chocolate▲
- Butterscotch Ebony▲
- Cappuccino
- Cappuccino Chocolate▲
- Carbon
- Chestnut
- Chestnut Ebony▲
- Driftwood
- Driftwood Chocolate▲
- Driftwood Ebony▲
- Harvest
- Harvest Chocolate▲
- Harvest Ebony▲
- Hazelnut
- Hazelnut Ebony▲
- Java
- Mocha
- Mocha Ebony▲
- Natural
- Natural Chocolate▲
- Nutmeg
- Nutmeg Chocolate▲
- Nutmeg Ebony▲
- Oregano
- Oregano Chocolate▲
- Oregano Ebony▲
- Rattan
- Rattan Chocolate▲
- Rattan Ebony▲
- Rye
- Rye Ebony▲
- Slate
- Slate Chocolate▲
- Slate Ebony▲
- Slate Nickel
- Tarragon
- Tarragon Chocolate▲
- Tarragon Ebony▲
- Toffee
- Toffee Chocolate▲
- Toffee Ebony▲
- Unfinished

Specialty

- Chateaux Brittany
- Chateaux Cappuccino
- Chateaux Nutmeg
- Chateaux Oregano
- Chateaux Toffee

▲Finishes available with Old World Distressing

GLAZING
Upcharge 10%

LIGHT CHAIN DISTRESSING
Upcharge 10%

MATTE TOP COAT NEW!
Upcharge 5%

There is no upcharge for Matte Top Coat on a Stain with Glaze or on Chateaux.

SPATTERING
Upcharge 10%

There is no upcharge for Spattering on a Stain with Glaze.

CHATEAUX
Upcharge 15%

OLD WORLD DISTRESSING
Upcharge 15%

© Copyright StarMark Cabinetry FEBRUARY 2022

© Copyright StarMark Cabinetry **FEBRUARY 2022**

MAPLE: Available Inset Door Styles and Finishes

Maple inset door styles

- Addison NEW!
- Alexandria
- Allentown
- Amsdahl
- Annabella NEW!
- Ballinger NEW!
- Cambridge NEW!
- Charlotte
- Claymont NEW!
- Danburg
- DeWitt
- Evaro NEW!
- Fairhaven
- Gillette
- Knottingham
- Lafayette
- Lafontaine
- Laforest
- Liberty NEW!
- Mackay
- Merrimac
- Montico
- Reynolds NEW!
- Rocheport
- Rock Elm
- Rutland NEW!
- Victor NEW!
- Winterhaven
- Xenon

All Maple inset door styles
are available with any of the stain finishes listed below:

- Butterscotch
- Butterscotch Chocolate▲
- Cappuccino
- Cappuccino Chocolate▲
- Chestnut
- Honey
- Honey Chocolate▲
- Mocha
- Mocha Ebony▲
- Natural
- Oregano
- Oregano Chocolate▲
- Slate
- Slate Chocolate▲
- Slate Ebony▲
- Slate Nickel
- Tarragon
- Tarragon Chocolate▲
- Tarragon Ebony▲
- Unfinished

Inset Cabinetry is available in Custom finishes. See S-20-23 for details.

▲Finishes available with Old World Distressing

COTTAGE STAIN WITH GLAZE
Upcharge 15%

GLAZING
Upcharge 10%

LIGHT CHAIN DISTRESSING
Upcharge 10%

OLD WORLD DISTRESSING
Upcharge **15%**

SPATTERING
Upcharge 10%

There is no upcharge for Spattering on a Stain with Glaze.

MATTE TOP COAT NEW!
Upcharge 5%

There is no upcharge for Matte Top Coat on a Stain with Glaze.

© Copyright StarMark Cabinetry **FEBRUARY 2022**

MAPLE: Available Inset Door Styles and Finishes

Maple inset door styles

- Addison NEW!
- Alexandria
- Allentown
- Amsdahl
- Annabella NEW!
- Ballinger NEW!
- Cambridge NEW!
- Charlotte
- Claymont NEW!
- Danburg
- DeWitt
- Evaro NEW!
- Fairhaven
- Gillette
- Knottingham
- Lafayette
- Lafontaine
- Laforest
- Liberty NEW!
- Mackay
- Merrimac
- Montico
- Reynolds NEW!
- Rocheport
- Rock Elm
- Rutland NEW!
- Victor NEW!
- Winterhaven
- Xenon*

Inset Cabinetry is available in Custom finishes. See S-20-23 for details.

! A FF&D sample door is the best way to illustrate Specialty finish characteristics. We encourage you to order a FF&D sample door.

All Maple inset door styles are available with any of the Tinted Varnish finishes listed below:

- Black
- Blueberry
- Blueberry Chocolate▲
- Blueberry Ebony▲
- Bottle Green NEW!
- Breeze NEW!
- Breeze Chocolate▲ NEW!
- Breeze Ebony▲ NEW!
- Buttercream
- Buttercream Chocolate▲
- Capri NEW!
- Capri Chocolate▲ NEW!
- Capri Ebony▲ NEW!
- Creekstone NEW!
- Crystal Fog
- Crystal Fog Chocolate▲
- Currant NEW!
- Dove
- Dove Chocolate▲
- Dove Latte
- Dove Nickel
- Frost
- Frost Chocolate▲
- Frost Ebony▲
- Graphite
- Graphite Chocolate▲
- Graphite Ebony▲
- Ivory Cream
- Ivory Cream Chocolate▲
- Macadamia
- Macadamia Chocolate▲
- Macadamia Latte
- Marshmallow Cream
- Marshmallow Cream Chocolate▲
- Marshmallow Cream Latte
- Marshmallow Cream Nickel
- Mineral Gray NEW!
- Moon Bay NEW!
- Moss Green
- Moss Green Chocolate▲
- Mushroom
- Mushroom Chocolate▲
- Pearl
- Pearl Chocolate▲
- Pebble Gray NEW!
- Peppercorn
- Peppercorn Chocolate▲
- Peppercorn Ebony▲
- Portabella NEW!
- Portabella Chocolate▲ NEW!
- Portabella Ebony▲ NEW!
- Repose Grey
- Repose Grey Chocolate▲
- Repose Grey Ebony▲
- Sage NEW!
- Sage Chocolate▲ NEW!
- Sage Ebony▲ NEW!
- Shale
- Shale Chocolate▲
- Shale Ebony▲
- Simply White NEW!
- Stone
- Stone Chocolate▲
- Stone Ebony▲
- White
- White Chocolate▲
- White Latte
- White Nickel
- Wild Honey NEW!
- Wings NEW!

Specialty

- Amaretto▲
- Villa Black*
- Villa Breeze Ebony* NEW!
- Villa Capri Ebony* NEW!
- Villa Green*
- Villa Ivory*
- Villa Marshmallow*
- Villa Marshmallow Nickel*
- Villa Mushroom*
- Villa Pearl*

* The Xenon door style is not available in the Villa finish.
▲Finishes available with Old World Distressing

FINISH UPCHARGE

Tinted Varnish	5%
Tinted Varnish with Glaze	15%
Amaretto	15%
Villa	15%

LIGHT CHAIN DISTRESSING

Upcharge	10%

There is no upcharge for Light Chain Distressing on Tinted Varnish with Glaze.

COTTAGE TINTED VARNISH WITH GLAZE

Upcharge	15%

OLD WORLD DISTRESSING

Upcharge	15%

© Copyright StarMark Cabinetry FEBRUARY 2022

MDF: Available Inset Door Styles and Finishes

MDF door styles
Terra NEW!

All MDF inset door styles are available with the Tinted Varnish finishes listed below:

Black	Pearl
Blueberry	Pebble Gray NEW!
Bottle Green NEW!	Peppercorn
Breeze NEW! NEW!	Portabella NEW!
Buttercream	Repose Grey
Capri NEW!	Sage NEW!
Creekstone NEW!	Shale
Crystal Fog	Simply White NEW!
Currant NEW!	Stone
Dove	White
Frost	Wild Honey NEW!
Graphite	Wings
Ivory Cream	
Macadamia	
Marshmallow Cream	
Mineral Gray NEW!	
Moon Bay NEW!	
Moss Green	
Mushroom	

FINISH UPCHARGES

Tinted Varnish	5%

© Copyright StarMark Cabinetry **FEBRUARY 2022**

QUARTER SAWN OAK: Available Inset Door Styles and Finishes

Quarter Sawn Oak inset door styles

- Addison NEW!
- Alexandria
- Allentown
- Amsdahl
- Annabella NEW!
- Ballinger NEW!
- Cambridge NEW!
- Charlotte
- Claymont NEW!
- Danburg
- DeWitt
- Evaro NEW!
- Fairhaven
- Gillette
- Knottingham
- Lafayette
- Lafontaine
- Laforest
- Liberty NEW!
- Mackay
- Merrimac
- Montico
- Reynolds NEW!
- Rocheport
- Rock Elm
- Rutland NEW!
- Victor NEW!
- Winterhaven
- Xenon

All Quarter Sawn Oak inset door styles are available with any of the stain finishes listed below:

- Cappuccino
- Cappuccino Chocolate▲
- Chestnut
- Driftwood
- Driftwood Chocolate▲
- Driftwood Ebony▲
- Harvest
- Harvest Chocolate▲
- Hazelnut
- Hazelnut Ebony▲
- Honey
- Honey Chocolate▲
- Java
- Mocha
- Mocha Ebony▲
- Natural
- Natural Chocolate▲
- Nutmeg
- Nutmeg Chocolate▲
- Oregano
- Oregano Chocolate▲
- Rye
- Rye Ebony▲
- Slate
- Slate Chocolate▲
- Slate Ebony▲
- Slate Nickel
- Tarragon
- Tarragon Chocolate▲
- Tarragon Ebony▲
- Toffee
- Toffee Chocolate▲
- Unfinished

Inset Cabinetry is available in Custom finishes.
See S-20-23 for details.

▲Finishes available with Old World Distressing

COTTAGE STAIN WITH GLAZE
Upcharge 15%

GLAZING
Upcharge 10%

LIGHT CHAIN DISTRESSING
Upcharge 10%

OLD WORLD DISTRESSING
Upcharge 15%

SPATTERING
Upcharge 10%

There is no upcharge for Spattering on a Stain with Glaze.

MATTE TOP COAT
Upcharge 5%

There is no upcharge for Matte Top Coat on a Stain with Glaze.

© Copyright StarMark Cabinetry FEBRUARY 2022

QUARTER SAWN OAK: Available Inset Door Styles and Finishes

Quarter Sawn Oak inset door styles

- Addison NEW!
- Alexandria
- Allentown
- Amsdahl
- Annabella NEW!
- Ballinger NEW!
- Cambridge NEW!
- Charlotte
- Claymont NEW!
- Danburg
- DeWitt
- Evaro NEW!
- Fairhaven
- Gillette
- Knottingham
- Lafayette
- Lafontaine
- Laforest
- Liberty NEW!
- Mackay
- Merrimac
- Montico
- Reynolds NEW!
- Rocheport
- Rock Elm
- Rutland NEW!
- Victor NEW!
- Winterhaven
- Xenon

All Quarter Sawn Oak inset door styles are available with any of the Tinted Varnish finishes listed below:

- Black
- Blueberry
- Blueberry Chocolate▲
- Blueberry Ebony▲
- Bottle Green NEW!
- Breeze NEW!
- Breeze Chocolate▲ NEW!
- Breeze Ebony▲ NEW!
- Buttercream
- Buttercream Chocolate▲
- Capri NEW!
- Capri Chocolate▲ NEW!
- Capri Ebony▲ NEW!
- Creekstone NEW!
- Crystal Fog
- Crystal Fog Chocolate▲
- Currant NEW!
- Dove
- Dove Chocolate▲
- Dove Latte
- Dove Nickel
- Frost
- Frost Chocolate▲
- Frost Ebony▲
- Graphite
- Graphite Chocolate▲
- Graphite Ebony▲
- Ivory Cream
- Ivory Cream Chocolate▲
- Macadamia
- Macadamia Chocolate▲
- Macadamia Latte
- Marshmallow Cream
- Marshmallow Cream Chocolate▲
- Marshmallow Cream Latte
- Marshmallow Cream Nickel
- Mineral Gray NEW!
- Moon Bay NEW!
- Moss Green
- Moss Green Chocolate▲
- Mushroom
- Mushroom Chocolate▲
- Pearl
- Pearl Chocolate▲
- Pebble Gray NEW!
- Peppercorn
- Peppercorn Chocolate▲
- Peppercorn Ebony▲
- Portabella NEW!
- Portabella Chocolate▲ NEW!
- Portabella Ebony▲ NEW!
- Repose Grey
- Repose Grey Chocolate▲
- Repose Grey Ebony▲
- Sage NEW!
- Sage Chocolate▲ NEW!
- Sage Ebony▲ NEW!
- Shale
- Shale Chocolate▲
- Shale Ebony▲
- Simply White NEW!
- Stone
- Stone Chocolate▲
- Stone Ebony▲
- White
- White Chocolate▲
- White Latte
- White Nickel
- Wild Honey NEW!
- Wings NEW!

▲Finishes available with Old World Distressing

Inset Cabinetry is available in Custom finishes.
See S-20-23 for details.

! A FF&D sample door is the best way to illustrate Specialty finish characteristics. We encourage you to order a FF&D sample door.

FINISH UPCHARGES

Tinted Varnish	5%
Tinted Varnish with Glaze	15%

LIGHT CHAIN DISTRESSING

Upcharge	10%

There is no upcharge for Light Chain Distressing on Tinted Varnish with Glaze.

COTTAGE TINTED VARNISH WITH GLAZE

Upcharge	15%

OLD WORLD DISTRESSING

Upcharge	15%

© Copyright StarMark Cabinetry FEBRUARY 2022

WALNUT: Available Door Styles and Finishes

Walnut inset door styles

- Charlotte
- Claymont
- Danburg
- DeWitt
- Fairhaven
- Gillette
- Knottingham
- Lafontaine
- Laforest
- Liberty
- Mackay
- Merrimac
- Montico
- Reynolds
- Rocheport
- Rock Elm

Walnut inset door styles are available with any of the stain finishes listed below:

- Cappuccino
- Chestnut
- Harvest
- Hazelnut
- Mocha
- Natural
- Nutmeg
- Oregano
- Rattan
- Rye
- Slate
- Toffee
- Unfinished

Inset Cabinetry is available in Custom finishes.
See S-20-23 for details.

LIGHT CHAIN DISTRESSING
Upcharge 10%

SPATTERING
Upcharge 10%

WALNUT
Upcharge 25%

MATTE TOP COAT
Upcharge 5%

© Copyright StarMark Cabinetry **FEBRUARY 2022**

FACE FRAMES

There are two styles of face frames for Inset: Beaded Inset and Flush Inset.

Beaded Inset Face Frame

Openings of face frame feature a ¼" machined integral bead.

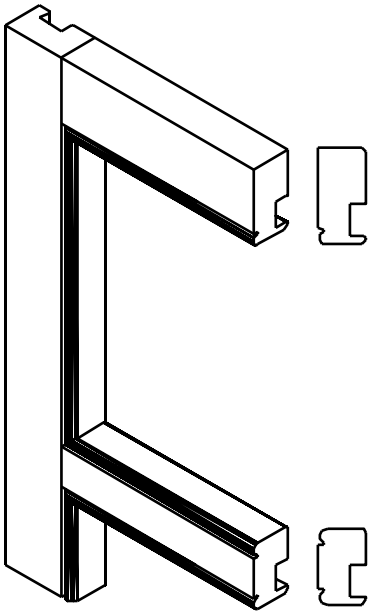

Flush Inset Face Frame

Openings of face frame are square.

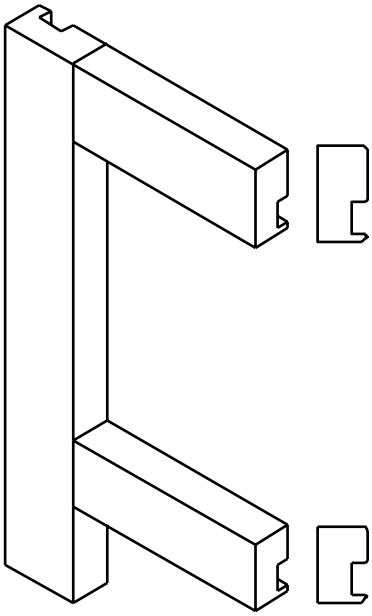

FACE FRAME REVEAL

Inset face frame reveals are 1½" unless noted.

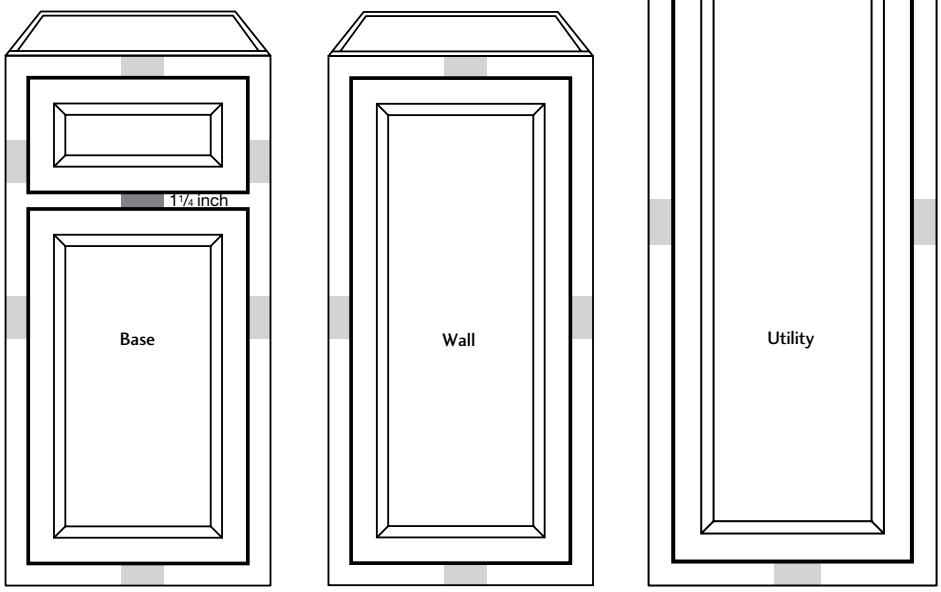

© Copyright StarMark Cabinetry **FEBRUARY 2022**

INSET CABINETRY, CONCEALED HINGES AND FACE FRAME AND DOOR CONSIDERATIONS

When specifying concealed hinges with a face frame and door on end configuration, please note the following:

- Concealed hinges cannot be hinged on the same corner as a face frame and door on end, without a wide stile of 4" or greater specified on either corner.
- Concealed hinges protrude into the face frame and door (FFD) opening on edge by approximately 2".
- Concealed hinges are very visible through glass doors.
- Concealed hinges affect where shelves can be placed.
- Concealed hinges limit cabinet availability.

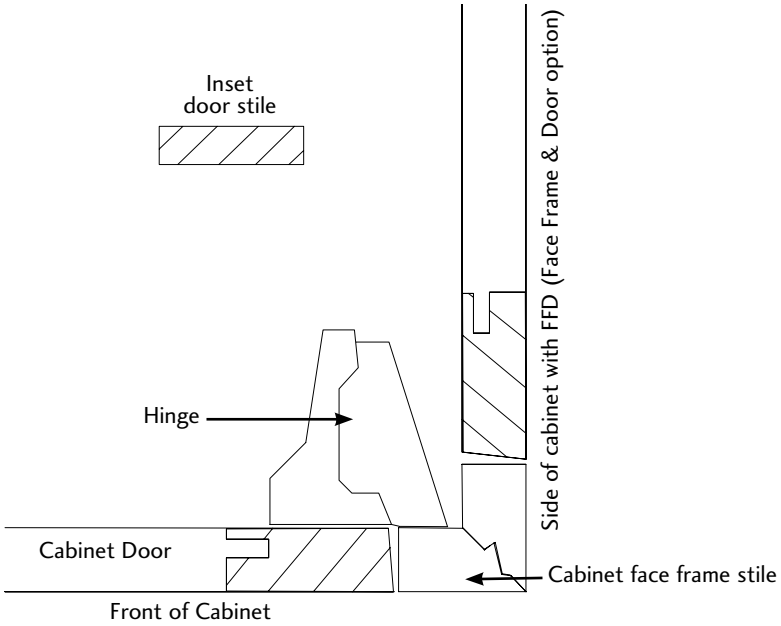

INSET CABINETRY WITH MULLION DOOR MODIFICATION BLOCK 9530

Inset Number of Mullions															
		Cabinet Width													
		12	**15**	**18**	**21**	**24**	**27**	**30**	**33**	**36**	**39**	**42***	**45**	**48**	**Door Height Break Point**
Cabinet Height	**15**	4	4	4	4	6	8	8	8	8	8	8	8	12	
	18	4	4	4	4	6	8	8	8	8	8	8	8	12	
	21	4	4	4	4	6	8	8	8	8	8	8	8	12	
	24	4	4	4	4	6	8	8	8	8	8	8	8	12	
	27	6	6	6	6	9	12	12	12	12	12	12	12	18	21½" 6 Lite starts
	30	6	6	6	6	9	12	12	12	12	12	12	12	18	
	33	6	6	6	6	9	12	12	12	12	12	12	12	18	
	36	6	6	6	6	9	12	12	12	12	12	12	12	18	
	39	6	6	6	6	9	12	12	12	12	12	12	12	18	
	42	6	6	6	6	9	12	12	12	12	12	12	12	18	
	45	8	8	8	8	12	16	16	16	16	16	16	16	24	39½" 8 Lite starts
	48	8	8	8	8	12	16	16	16	16	16	16	16	24	
	51	8	8	8	8	12	16	16	16	16	16	16	16	24	
	54	8	8	8	8	12	16	16	16	16	16	16	16	24	
	57	10	10	10	10	15	20	20	20	20	20	20	20	30	51½" 10 Lite starts
	60	10	10	10	10	15	20	20	20	20	20	20	20	30	
20" wide doors receive another column of mullions															

© Copyright StarMark Cabinetry **FEBRUARY 2022**

INSET WALL CABINET ALIGNMENT

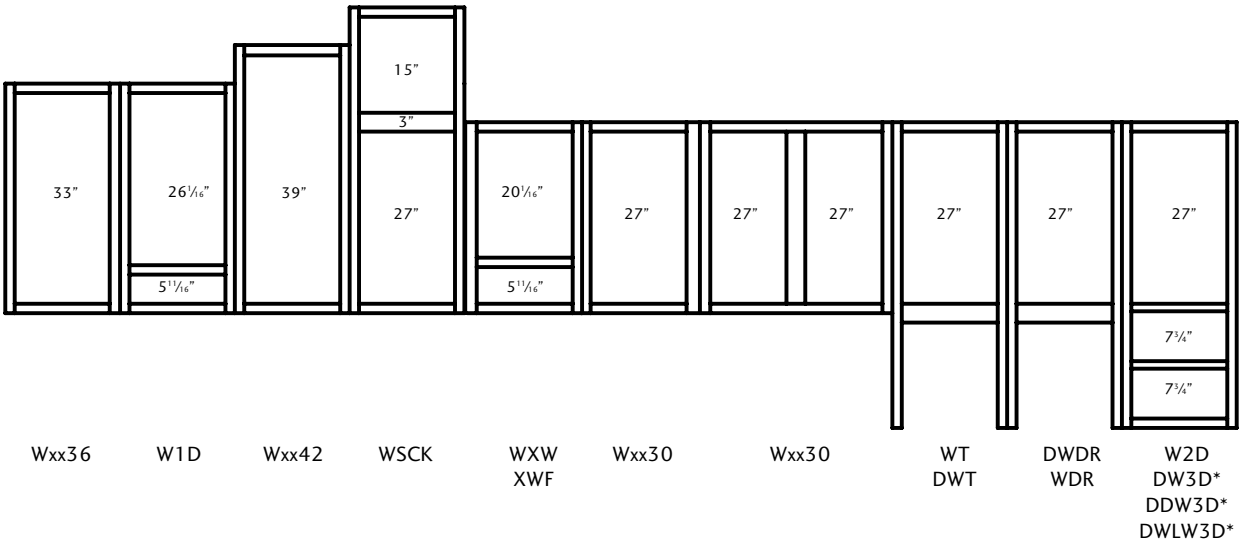

* Two drawer cabinets in Inset construction

Inset wall cabinets are 12" deep. The standard inside storage dimension is 10¾". Unless the cabinetry depth is modified to a greater depth, the cabinet will not accommodate oversized plates or dinnerware. Depth can be modified from 12" to 15" in ½" increments:
Inset Wall Increased Depth INDIW No Charge
Increases in depth beyond 15" is the standard upcharge. See block 9080 for Dimensional Modifications.

Standards for Single Door Inset Wall Cabinets

- Wall Cabinets are not available 9" wide.
- Depth is 12".
- Vertical stiles on the cabinet frame are 1½".
- Outside horizontal rails on the cabinet frame are 1½".
- Intermediate horizontal rails on the cabinet frame are 1¼" unless noted.
- Subtract 3" from the cabinet width to obtain the width of the opening for any Single Door Inset wall cabinet.
- Subtract 3" from the cabinet height to obtain the height of the opening for any Single Door Inset wall cabinet.

I Inset cabinetry depth can be modified from 12" to 15" in ½" increments:
Inset Wall Increased Depth INDIW No Charge

Standards for Double Door Inset Wall Cabinets

- Depth is 12".
- Vertical stiles on the cabinet frame are 1½".
- Outside horizontal rails on the cabinet frame are 1½".
- Intermediate horizontal rails on the cabinet frame are 1¼" unless noted.
- Vertical center mullions are 3" wide.
- A prefix of "2" denotes a cabinet built with butt doors. The cabinet is considered "full access" because there is no center mullion.
- Butt doors are not available in cabinets that are wider than 42". Cabinets wider than 42" will have a fixed center mullion. A fixed center mullion is necessary for stability.
- To compute the width of the opening on a Double Door Inset wall cabinet, subtract 6" from the cabinet width and divide by 2.
- To compute the width of the opening on a Butt Door Inset wall cabinet, subtract 3" from the cabinet width.
- Subtract 3" from the cabinet height to obtain the height of the door opening.

© Copyright StarMark Cabinetry FEBRUARY 2022

Face Frame Dimensions for Inset Wall Cabinets

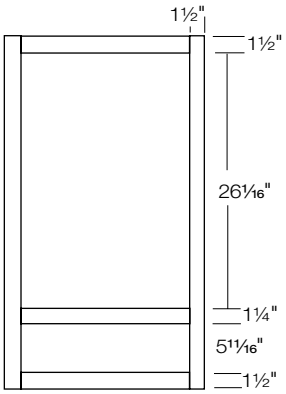

W1D

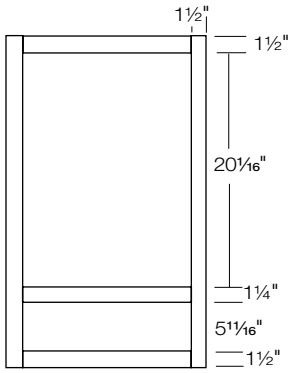

XW
XWF

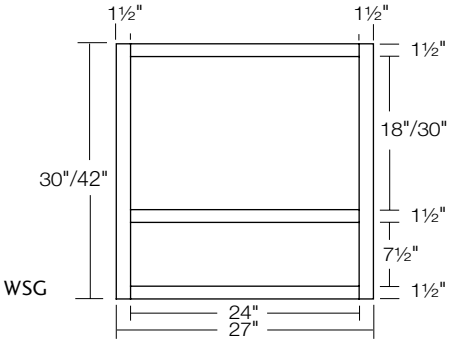

WSG

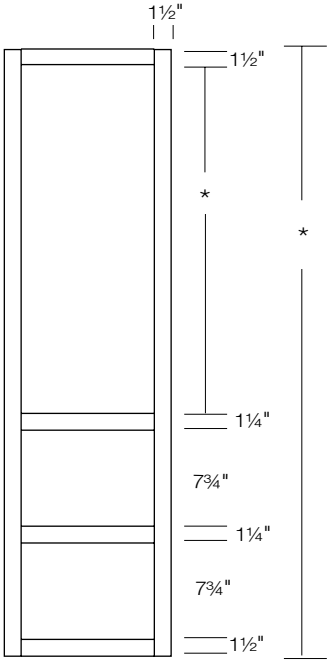

W2D

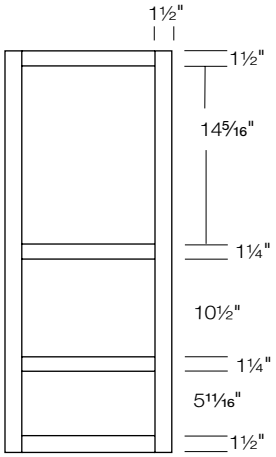

XCW
XCWF

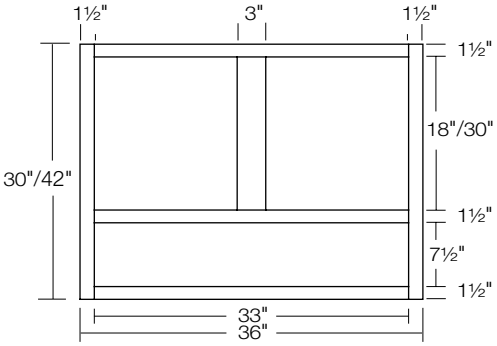

WSG

© Copyright StarMark Cabinetry FEBRUARY 2022

Standards for Single Door Inset Base Cabinets

- Base Cabinets are not available 9" wide.
- Depth is 24".
- Height is 34½".
- Vertical stiles on the cabinet frame are 1½".
- Outside horizontal rails on the cabinet frame are 1½".
- Intermediate horizontal rails on the cabinet frame are 1¼".
- Toe kick height is 4".
- Toe kick depth is 2⅝".
- Door opening height is 20⁹⁄₁₆", below a drawer.
- Drawer opening height is 5¹¹⁄₁₆".
- To compute the door/drawer opening width on a Single Door Inset base cabinet, subtract 3" from the cabinet width.
- For any Inset base cabinet with full height doors, the height opening is 27½". To compute the door/drawer opening width, subtract 3" from the cabinet width.

The wall base cabinetry will be 12" deep. The standard inside storage dimension is 10¾". Unless the cabinetry depth is modified to a greater depth, the cabinet will not accommodate oversized plates or dinnerware. Depth can be modified from 12"-15" in ½" increments:

Inset Wall Increased Depth INDIW No Charge

Increases in depth beyond 15" is the standard upcharge. See block 9080 for Dimensional Modifications.

Standards for Double Door Inset Base Cabinets

- Depth is 24".
- Height is 34½".
- Vertical stiles on the cabinet frame are 1½".
- Outside horizontal rails on the cabinet frame are 1½".
- Intermediate horizontal rails on the cabinet frame are 1¼".
- Toe kick height is 4".
- Toe kick depth is 2⅝".
- Door opening height is 20⁹⁄₁₆", below a drawer.
- Drawer opening height is 5¹¹⁄₁₆".
- A prefix of "2" denotes a cabinet built with butt doors. The cabinet is considered "full access" because there is no center mullion.
- Butt doors are not available in cabinets that are wider than 42". Cabinets wider than 42" will have a fixed center mullion. A fixed center mullion is necessary for stability.
- Butt door cabinets have full width drawers.
- To compute the width of the opening on a Double Door Inset base cabinet, subtract 6" from the cabinet width and divide by 2.
- To compute the width of the opening on a Butt Door Inset base cabinet, subtract 3" from the cabinet width.
- For any Inset base cabinet with full height doors, the height opening is 27½". Width opening is calculated using the same formulas described above.

INSET BASE CABINET ALIGNMENT FRAME OPENINGS

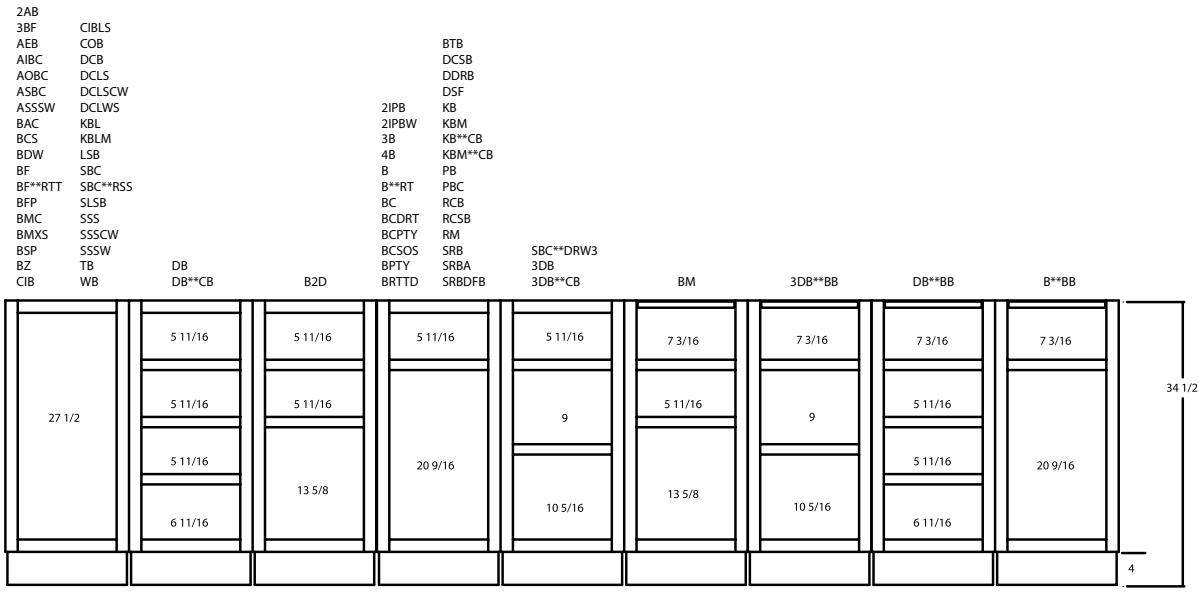

© Copyright StarMark Cabinetry FEBRUARY 2022

INSET BASE CABINET ALIGNMENT FRAME OPENINGS

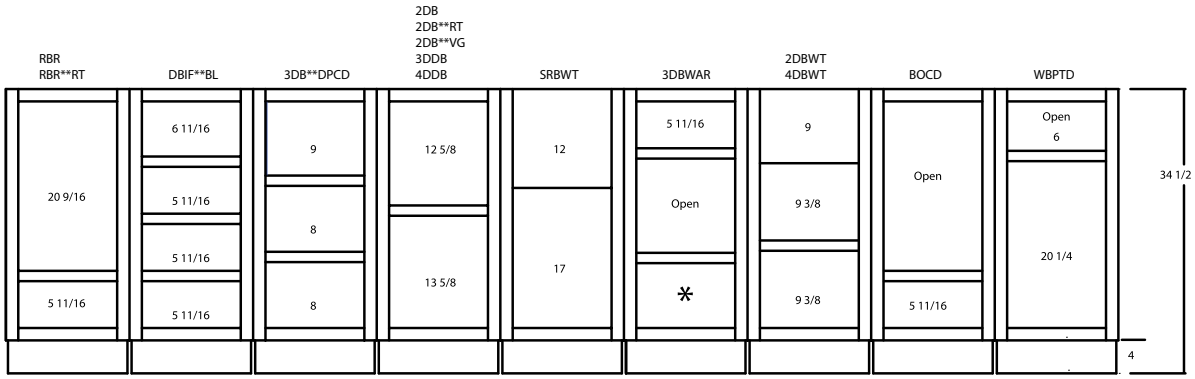

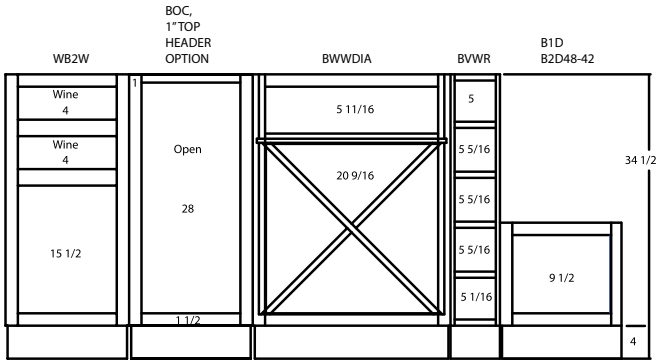

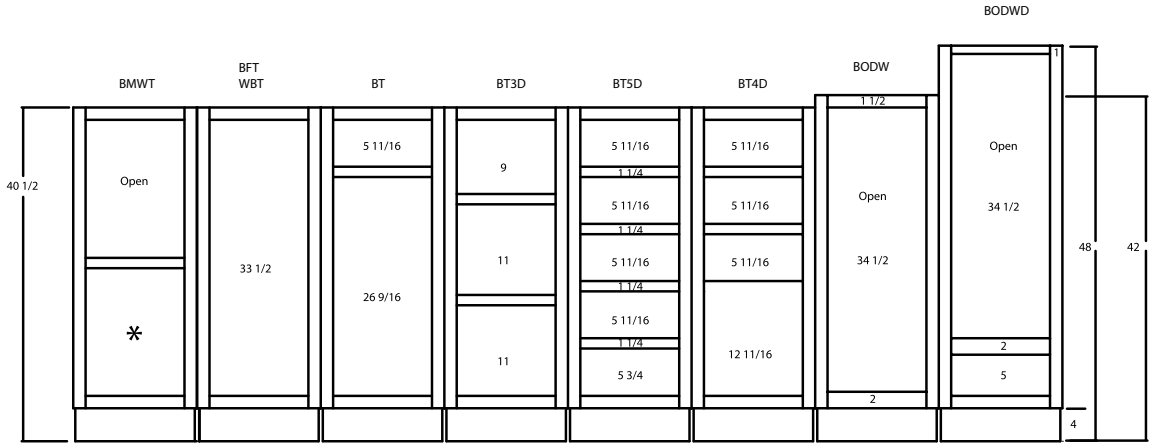

ADA Accessible Inset Base Cabinet Alignment

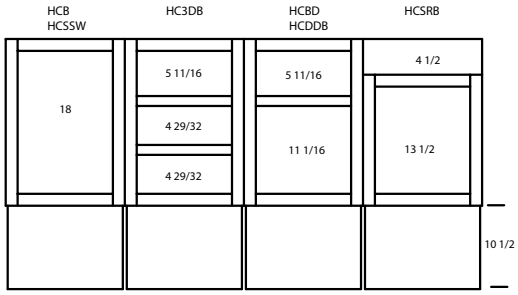

ADA Accessible Inset Base Door and Drawer Sizing

© Copyright StarMark Cabinetry FEBRUARY 2022

Face Frame Dimensions for Inset Base Cabinets

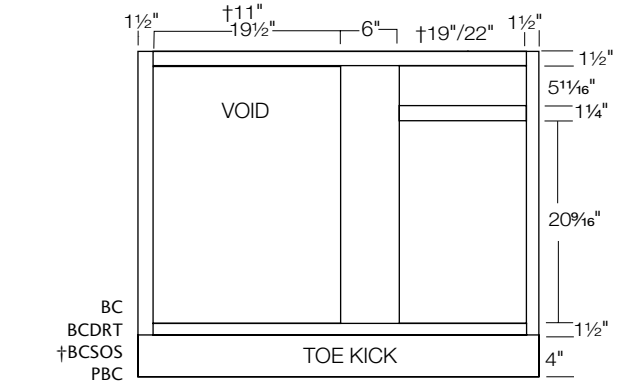

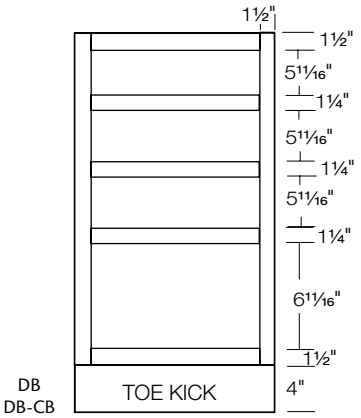

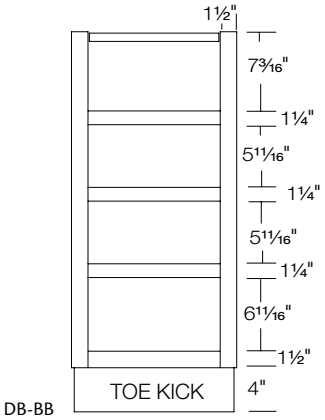

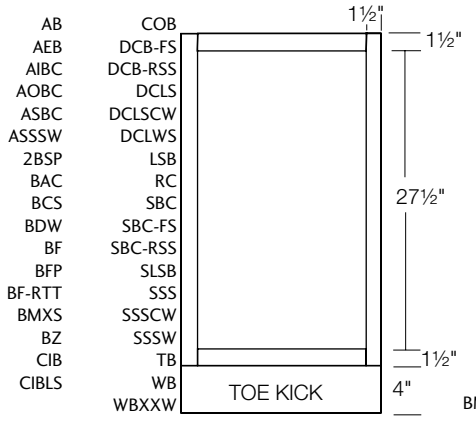

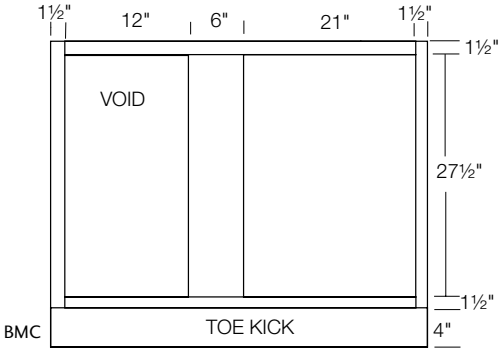

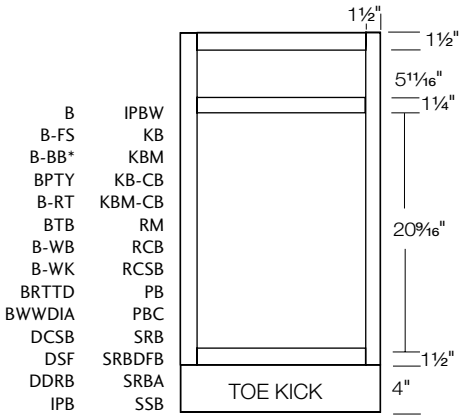

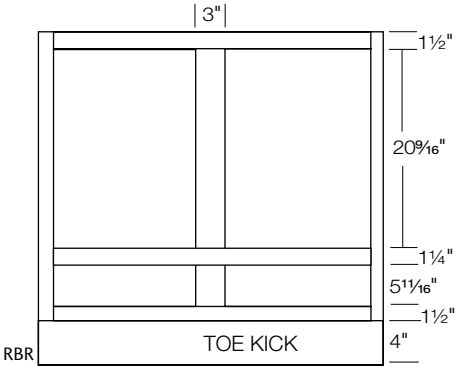

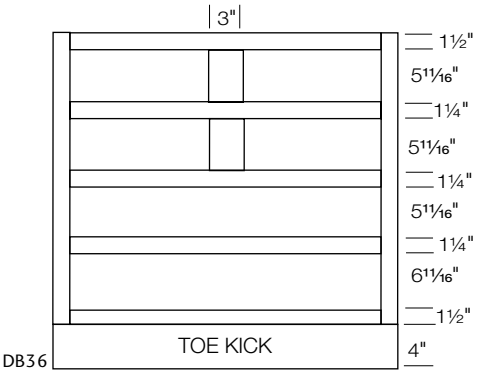

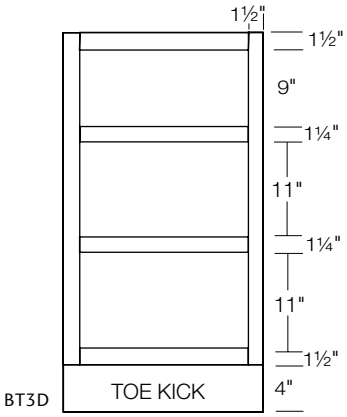

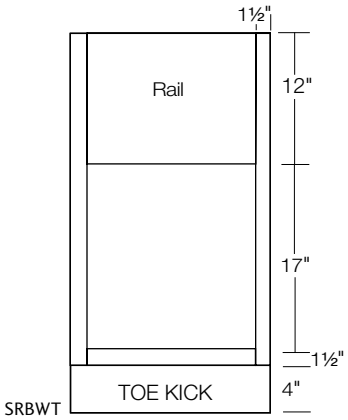

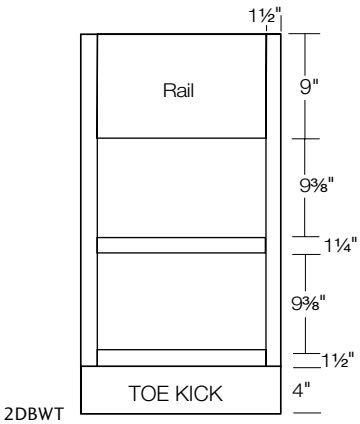

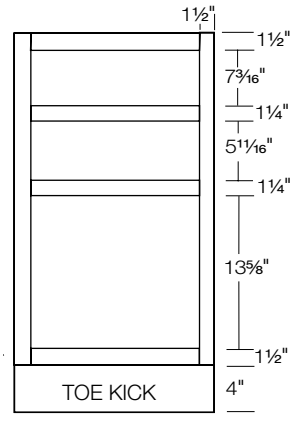

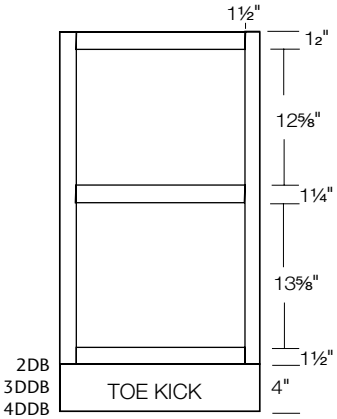

© Copyright StarMark Cabinetry FEBRUARY 2022

Face Frame Dimensions for Inset Base Cabinets

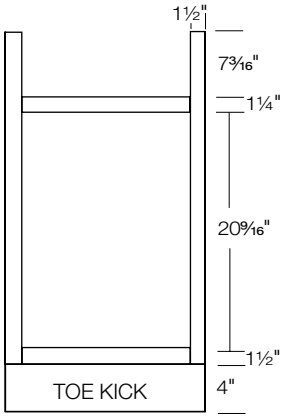

B_BB

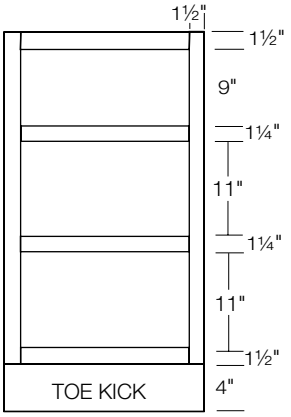

BT3D

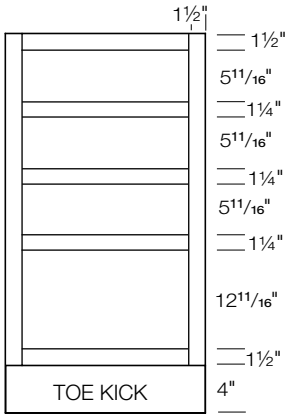

BT4D

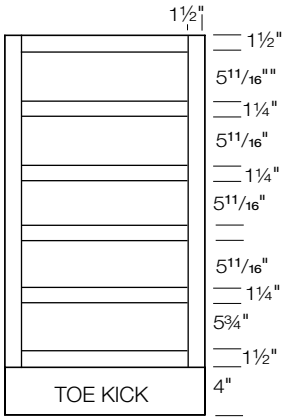

BT5D

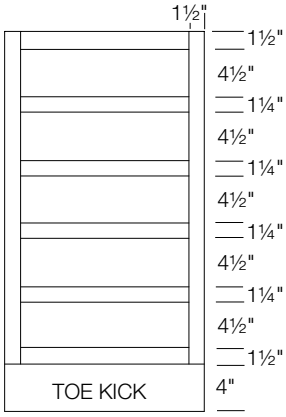

5DB

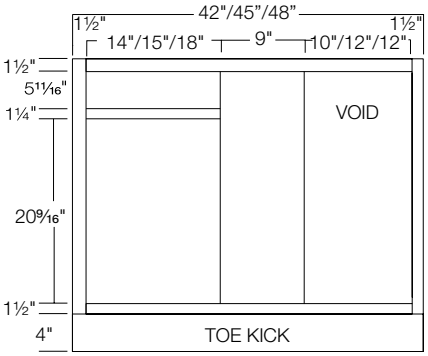

BCRSW__VR

Base Island Cabinet Frame Openings Alignment

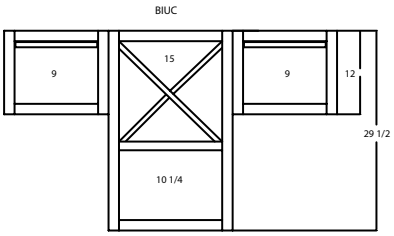

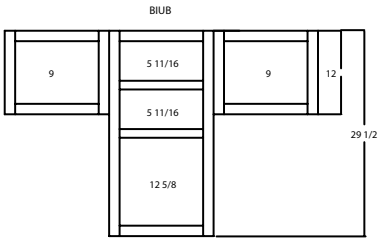

Base Island Cabinet Door and Drawer Sizing Alignment

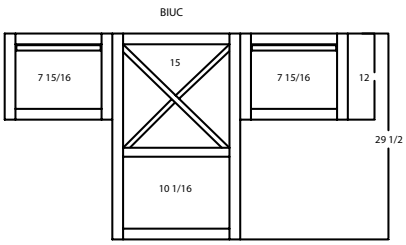

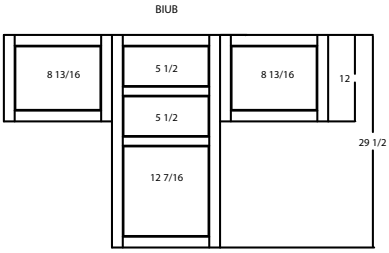

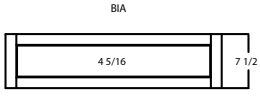

© Copyright StarMark Cabinetry FEBRUARY 2022

Inset Base Cabinet Alignment Door and Drawer Sizing

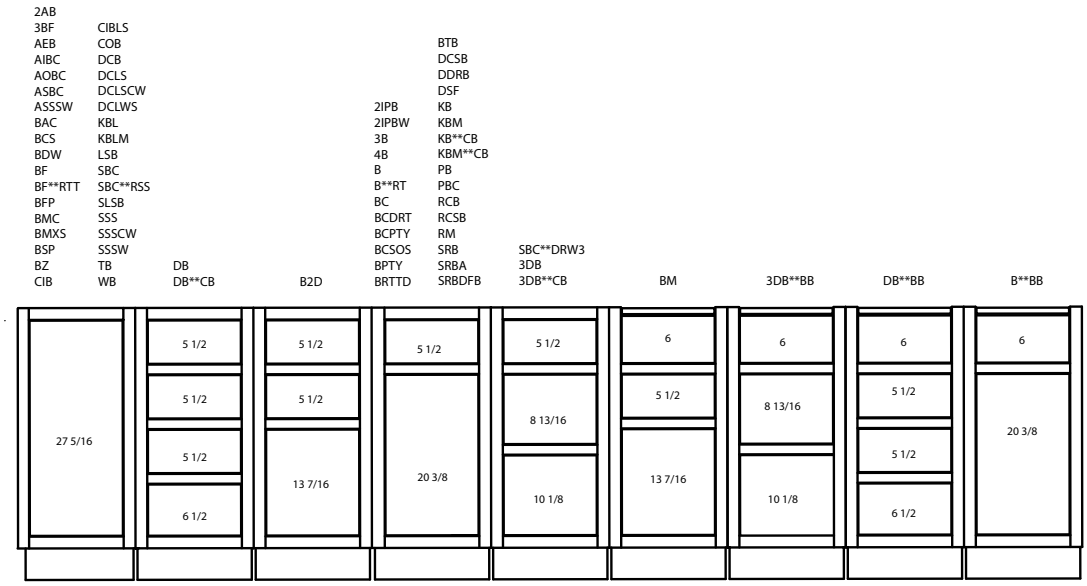

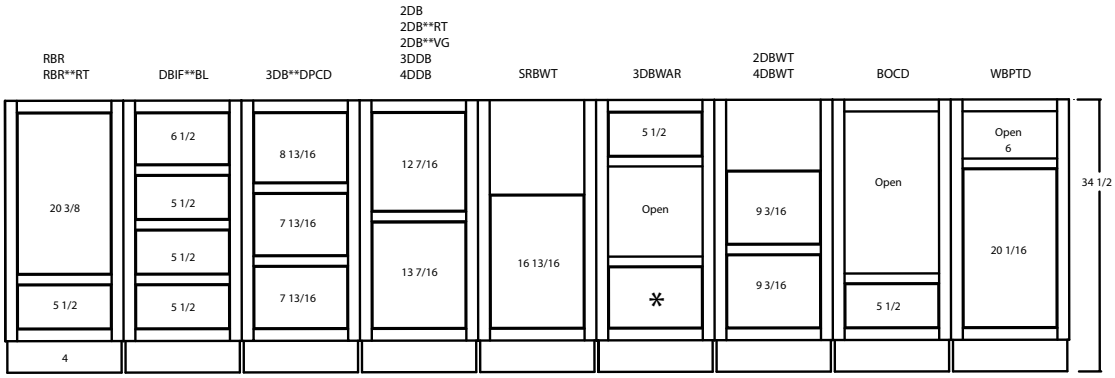

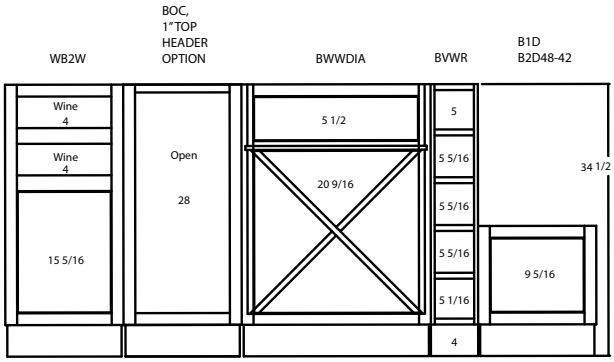

© Copyright StarMark Cabinetry **FEBRUARY 2022**

INSET UTILITY CABINET ALIGNMENT FRAME OPENINGS

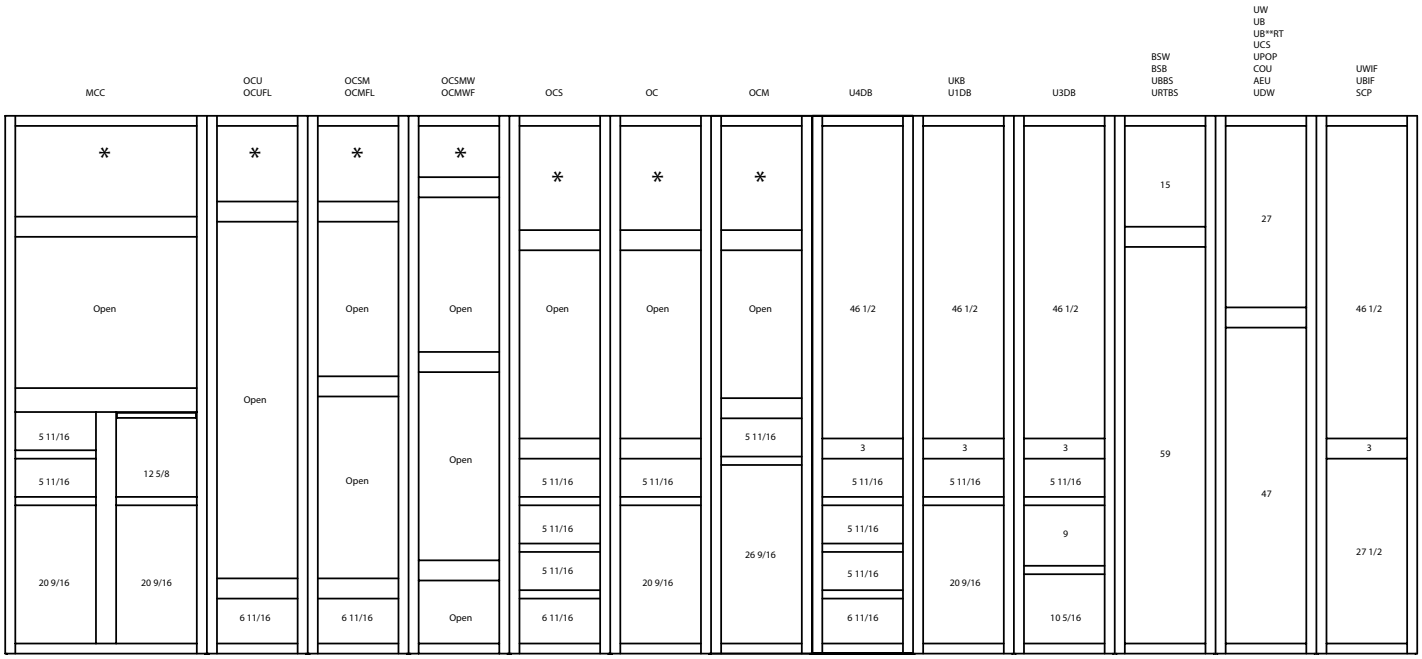

Standards for Single Door Inset Utility Cabinets

- Utility Cabinets not available 9” wide.
- Depth is 12” and 24”.
- Vertical stiles on the cabinet frame are 1½”.
- Outside horizontal rails on the cabinet frame are 1½”.
- Intermediate horizontal rails on the cabinet frame are 1¼” and 3”.
- Toe kick height is 4”.
- Toe kick depth is 2⅝”
- The opening of the top door varies for cabinets higher than 84”.

  Top door opening increases
  - 12” for 96” tall cabinet
  - 9” for the 93” tall cabinet
  - 6” for the 90” tall cabinet
  - 3” for the 87” tall cabinet

  Top door opening decreases
  - 3” for the 81” tall cabinet.
- To compute the door opening width on a single door utility cabinet, subtract 3” from cabinet width.

The utility wall cabinetry will be 12” deep. The standard inside storage dimension is 10¾”. Unless the cabinetry depth is modified to a greater depth, the cabinet will not accommodate oversized plates or dinnerware. Depth can be modified from 12”-15” in ½” increments:

Inset Wall Increased Depth INDIW No Charge

Increases in depth beyond 15” is the standard upcharge. See block 9080 for Dimensional Modifications.

Standards for Double Door Inset Utility Cabinets

- Depth is 12” and 24”.
- Vertical stiles on the cabinet frame are 1½”.
- Outside horizontal rails on the cabinet frame are 1½”.
- Intermediate horizontal rails on the cabinet frame are 1¼” and 3”.
- Vertical center mullions are 3” wide.
- Toe kick height is 4”.
- Toe kick depth is 2⅝”.
- The opening of the top door varies for cabinets higher than 84”.

  Top door opening increases
  - 12” for 96” tall cabinet
  - 9” for the 93” tall cabinet
  - 6” for the 90” tall cabinet
  - 3” for the 87” tall cabinet

  Top door opening decreases
  - 3” for the 81” tall cabinet
- A prefix of “2” denotes a cabinet built with butt doors. The cabinet is considered “full access” because there is no center mullion.
- Butt doors are not available in cabinets that are wider than 42”. Cabinets wider than 42” will have a fixed center mullion. A fixed center mullion is necessary for stability.
- Butt door cabinets have full width drawers.
- To compute the width of the opening on a Double Door Inset utility cabinet, subtract 6” from the cabinet width and divide by 2.
- To compute the width of the opening on a Butt Door Inset utility cabinet, subtract 3” from the cabinet width. Subtract 3” from the cabinet height to obtain the height of the opening.

© Copyright StarMark Cabinetry FEBRUARY 2022

Face Frame Dimensions for Inset Utility Cabinets

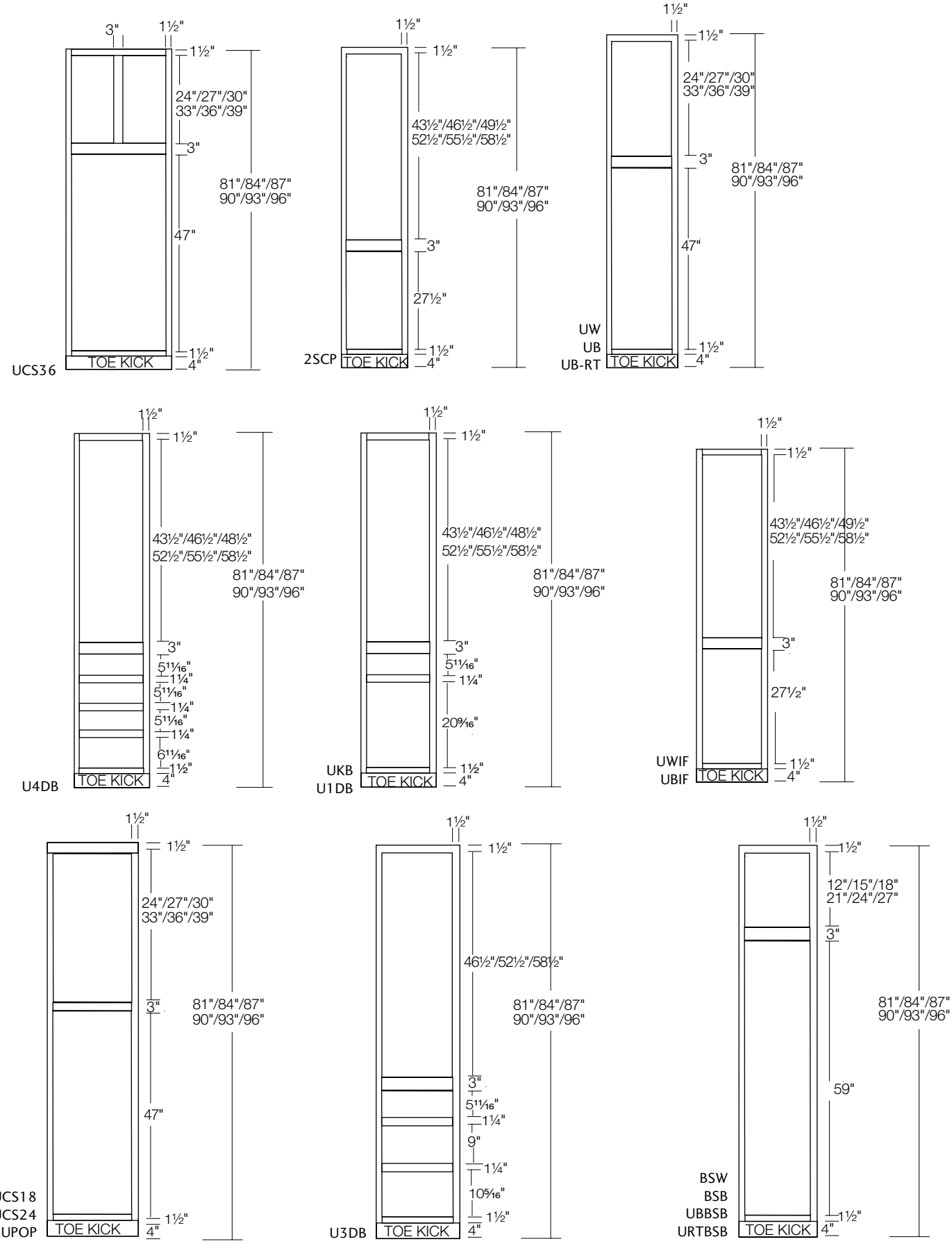

© Copyright StarMark Cabinetry FEBRUARY 2022

Inset Utility Cabinet Alignment Door and Drawer Sizing

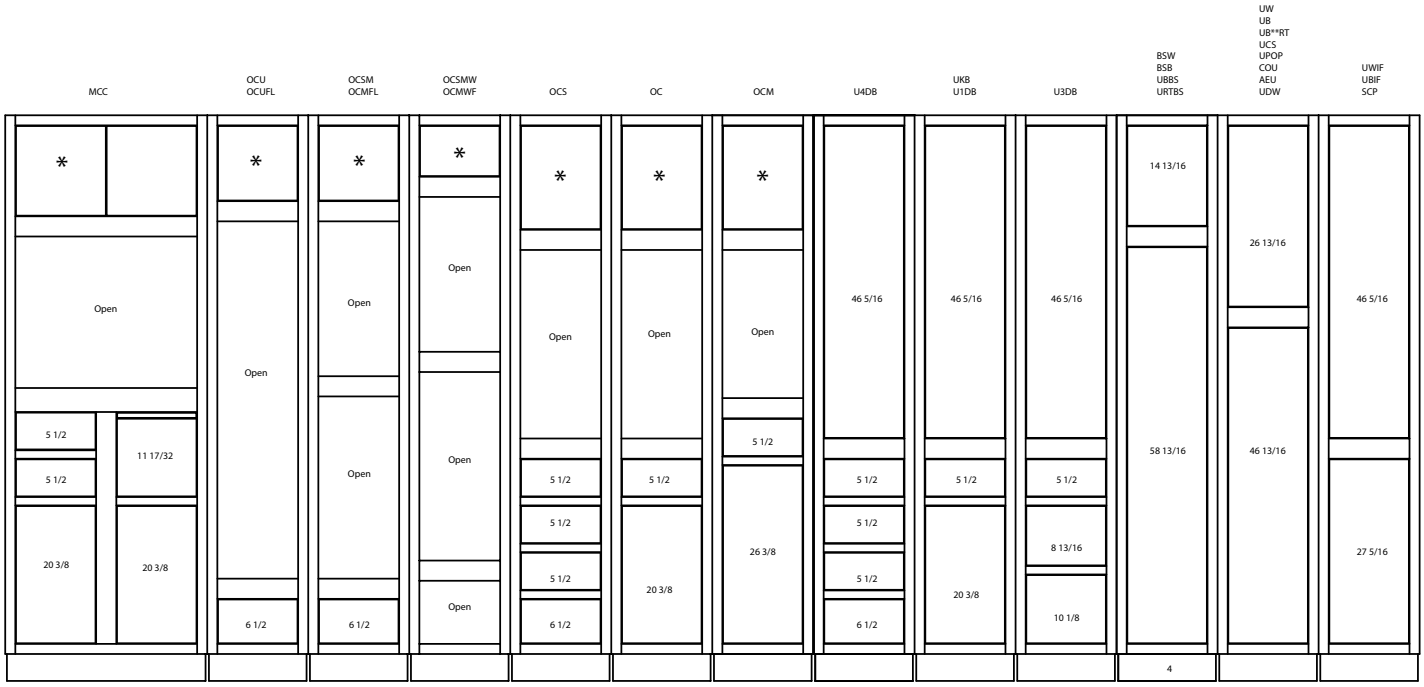

© Copyright StarMark Cabinetry **FEBRUARY 2022**

INSET OTHER ROOM CABINET ALIGNMENT FRAME OPENINGS

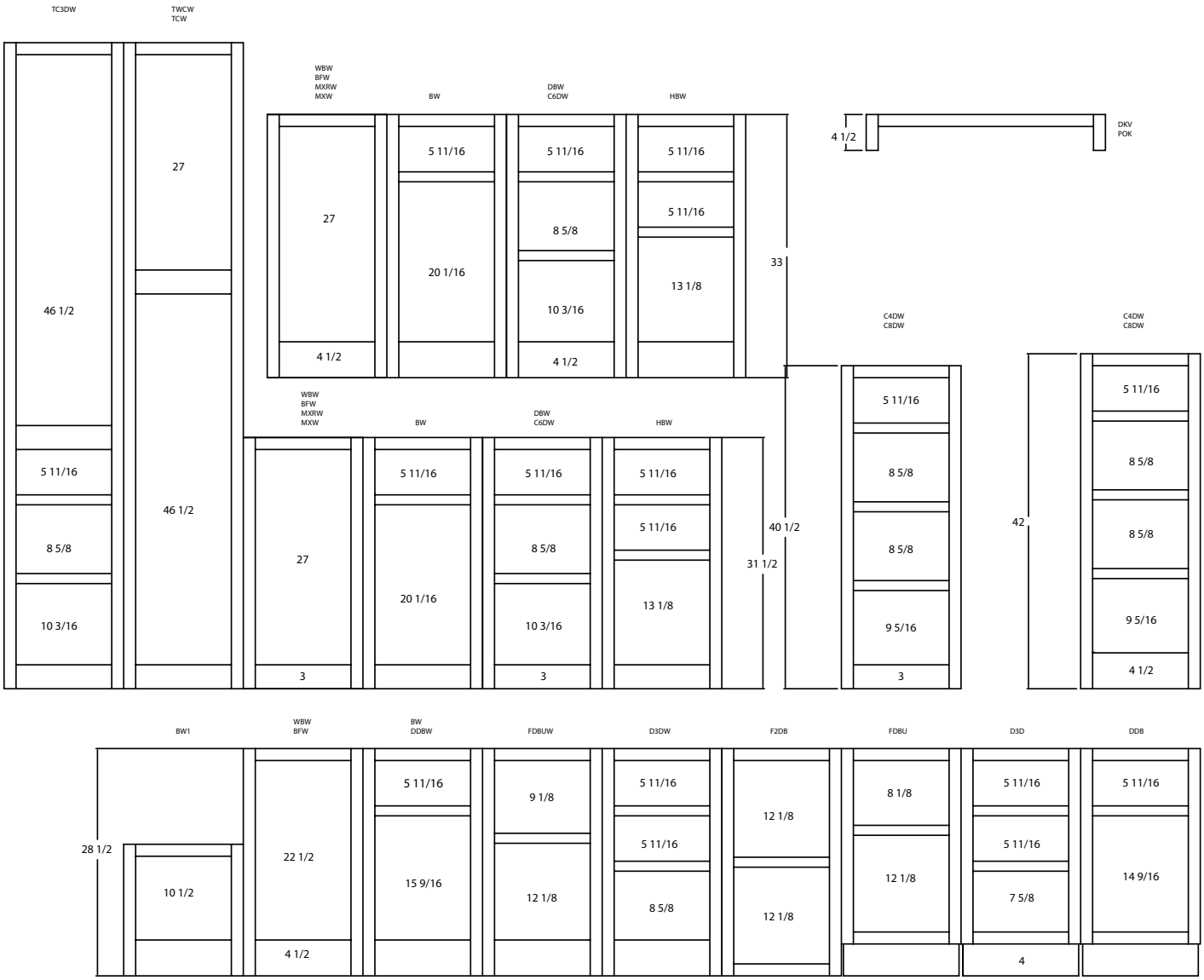

Standards for Single Door Inset Other Room Cabinets

- Depth is 21". Depths of 18" and 24" are available and must be specified.
- Height of tall cabinets is 81" or 82½".
- Height of base cabinets is 28½", 31½", 33", 40½" or 42".
- Wide bottom rails are 3" or 4½".
- Vertical stiles on the cabinet frame are 1½".
- Outside horizontal rails on the cabinet frame are 1½".
- Intermediate horizontal rails on the cabinet frame are 1¼" or 3".
- To compute the door/drawer opening width on a Single Door Inset Other Room cabinet, subtract 3" from the cabinet width.

Standards for Double Door Inset Other Room Cabinets

- Depth is 21". Depths of 18" and 24" are available and must be specified.
- Height of tall cabinets is 81" or 82½".
- Height of base cabinets is 28½", 31½", 33", 40½" or 42".
- Wide bottom rails are 3" or 4½".
- Vertical stiles on the cabinet frame are 1½".
- Outside horizontal rails on the cabinet frame are 1½".
- Intermediate horizontal rails on the cabinet frame are 1¼" or 3".
- Vertical center mullions are 3" wide.
- A prefix of "2" denotes a cabinet built with butt doors. The cabinet is considered "full access" because there is no center mullion.
- Butt doors are not available in cabinets that are wider than 42". Cabinets wider than 42" will have a fixed center mullion. A fixed center mullion is necessary for stability.
- Butt door cabinets have full width drawers.
- To compute the width of the opening on a Double Door Inset Other Room cabinet, subtract 6" from the cabinet width and divide by 2.
- To compute the width of the opening on a Butt Door Inset Other Room cabinet, subtract 3" from the cabinet width. Subtract 3" from the cabinet height to obtain the opening height.

© Copyright StarMark Cabinetry FEBRUARY 2022

Face Frame Dimensions for Inset Other Room Cabinets

HEIGHT OF CABINET	HEIGHT OF BOTTOM RAIL
31½″	3″
81″	3″
28½″	4½″
33″	4½″
82½″	4½″
40½″	3″
42″	4½″

○ Nomenclature indicates width by height unless otherwise indicated. Example:

BW1833
B - base cabinet
W - wide bottom rail
18 - 18″ wide
33 - 33″ high

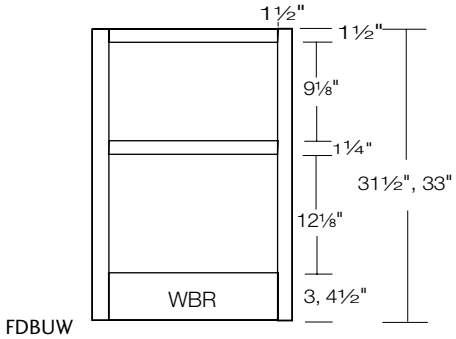

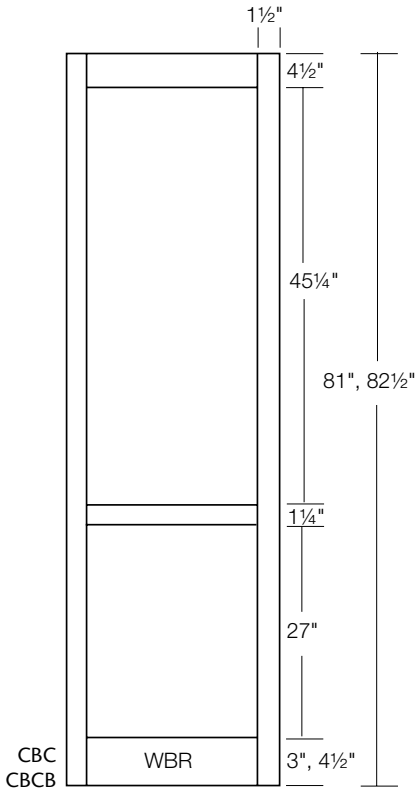

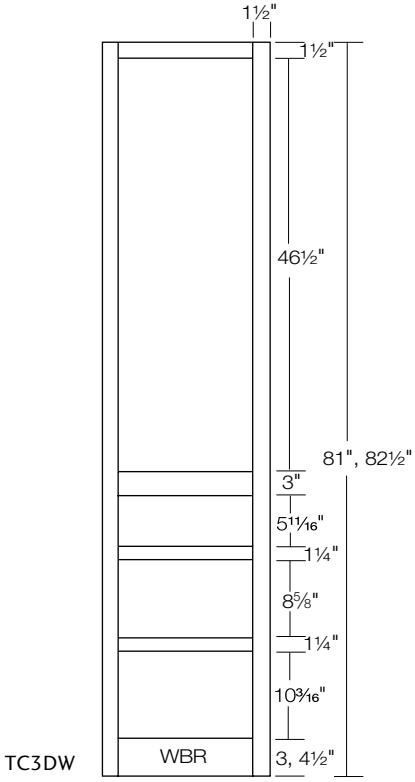

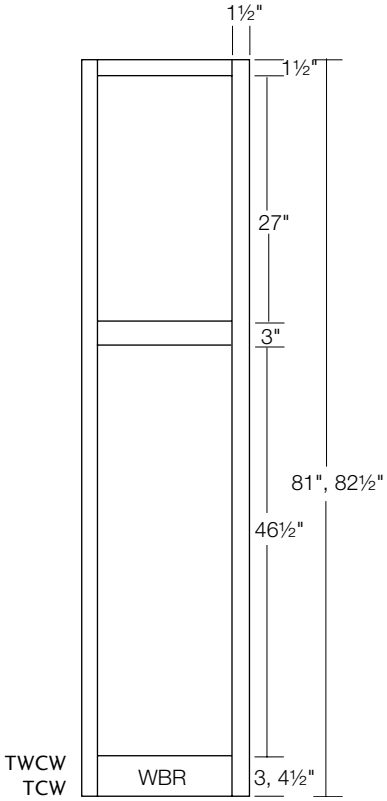

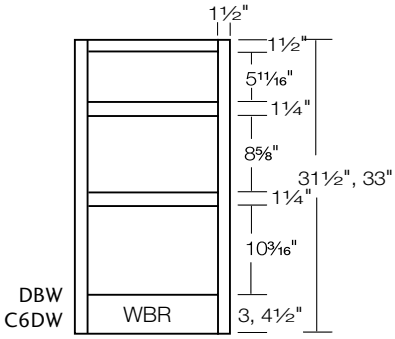

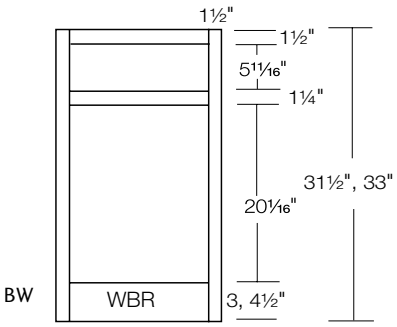

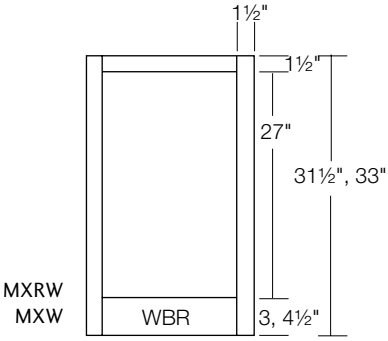

© Copyright StarMark Cabinetry FEBRUARY 2022

Inset Other Rooms Cabinet Alignment Door and Drawer Sizing

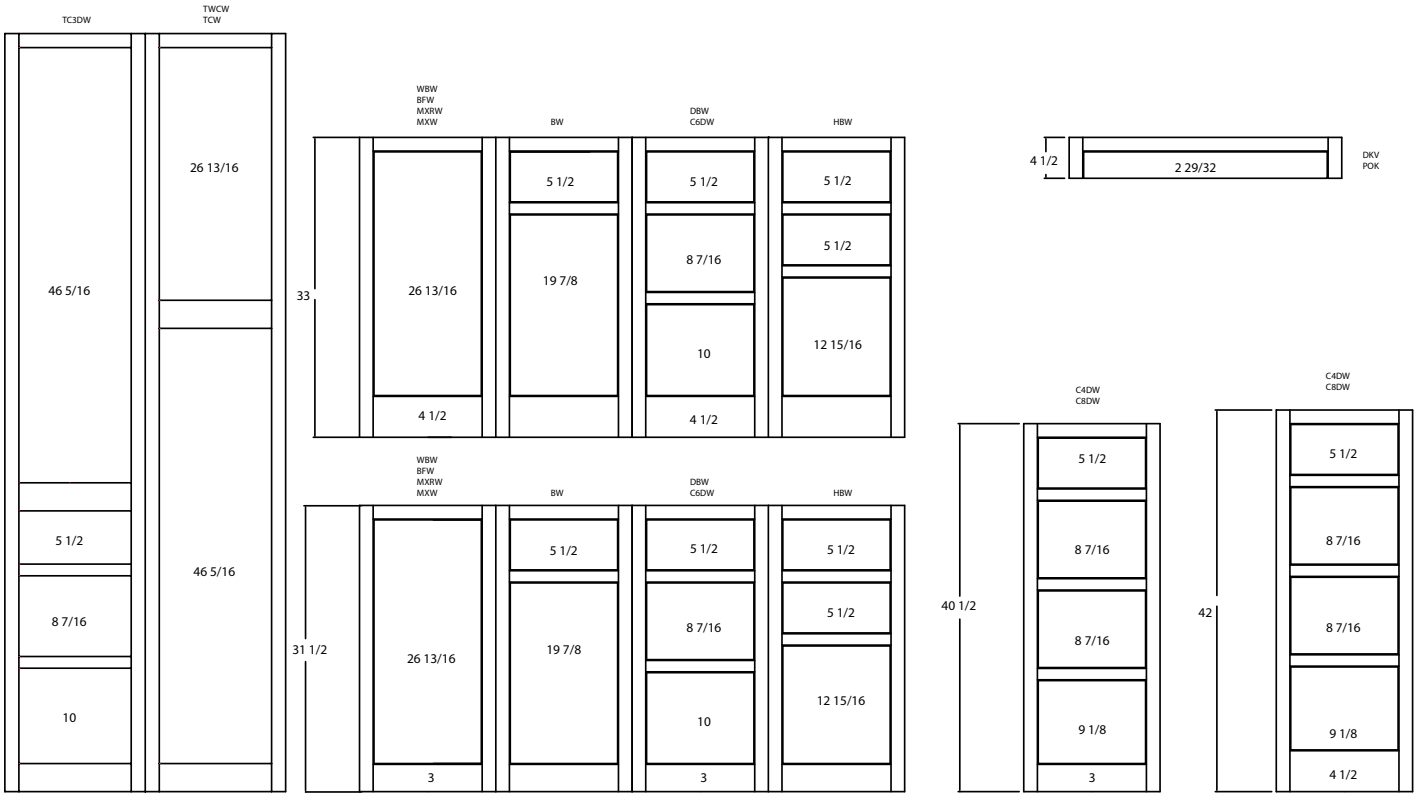

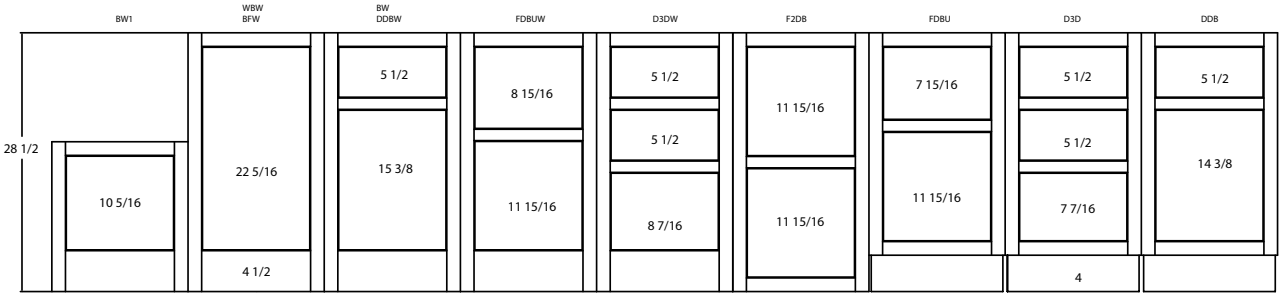

© Copyright StarMark Cabinetry **FEBRUARY 2022**

INSET VANITY CABINET ALIGNMENT FRAME OPENINGS

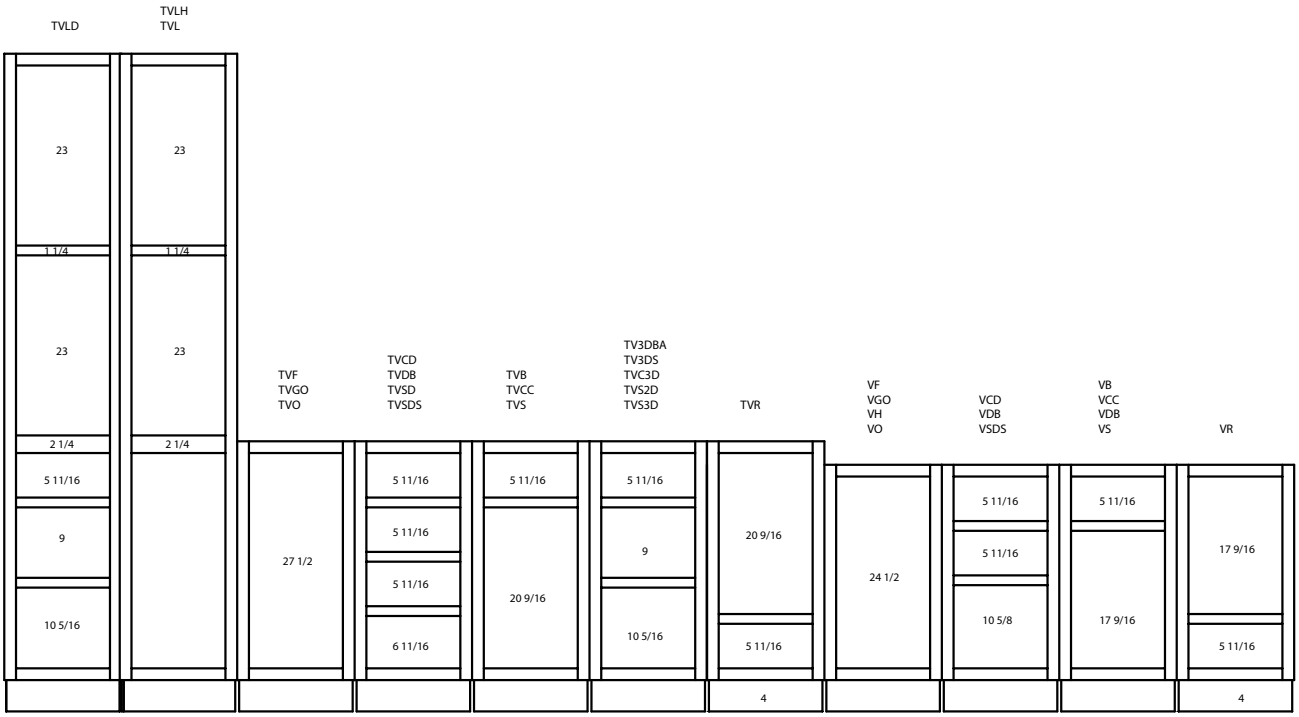

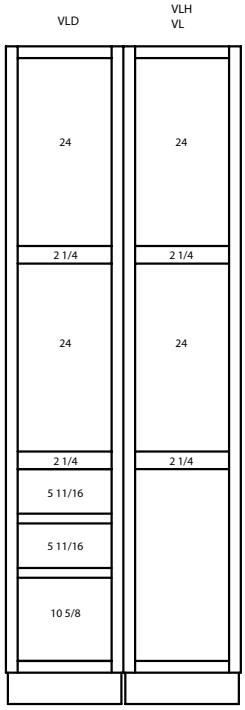

Standards for Single Door Inset Vanity Cabinets

- Heights are 31½", 34½" and 84"
- Depths are 18" and 21" unless noted.
- Vertical stiles on the cabinet frame are 1½".
- Outside horizontal rails on the cabinet frame are 1½".
- Intermediate horizontal rails on the cabinet frame are 1¼".
- Toe kick height is 4".
- Toe kick recess is 2⅝".
- Subtract 3" from the cabinet width to obtain the width of the opening for any Single Door Inset vanity cabinet.
- Door opening height is 17 9/16" or 20 9/16".
- Drawer opening height is 5 11/16".

© Copyright StarMark Cabinetry **FEBRUARY 2022**

Face Frame Dimensions for Inset Vanity Cabinets

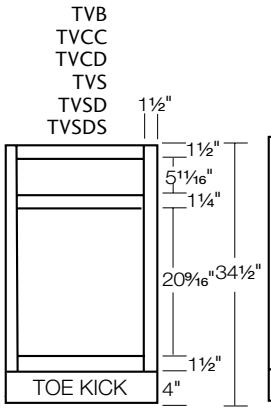

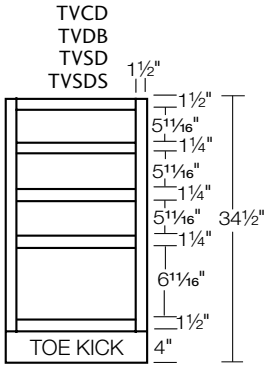

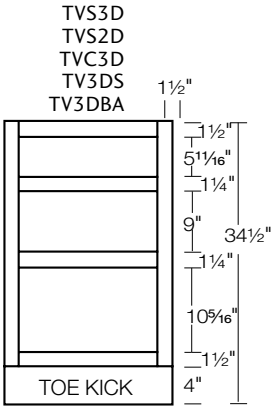

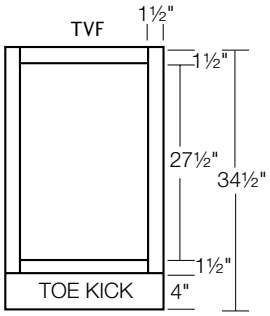

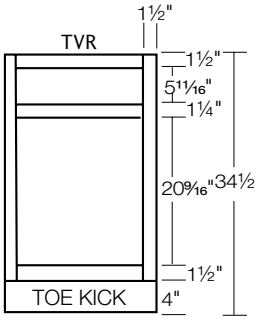

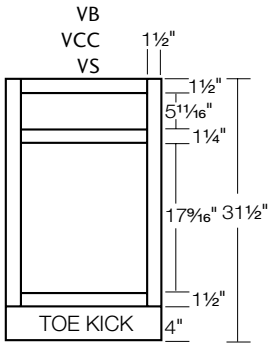

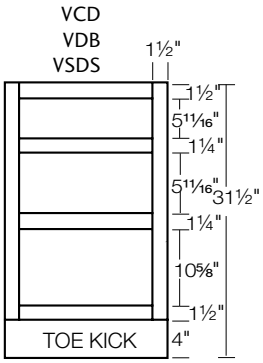

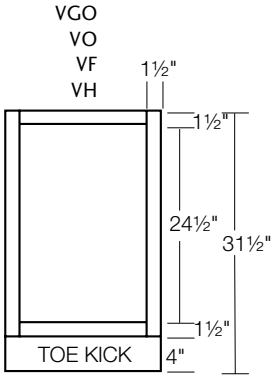

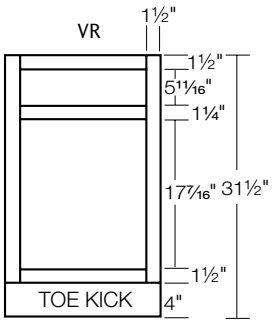

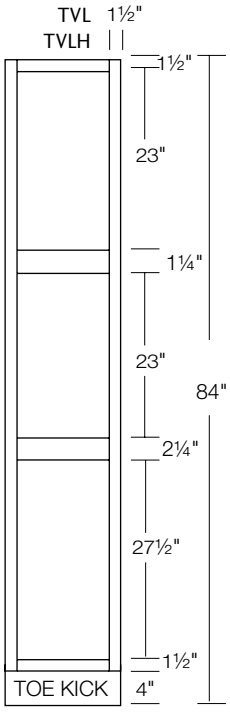

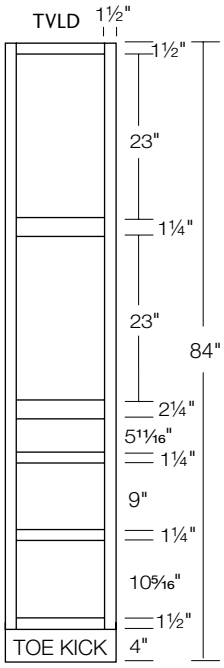

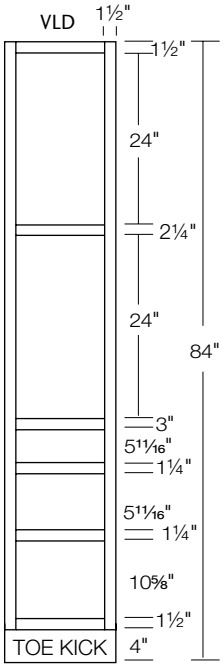

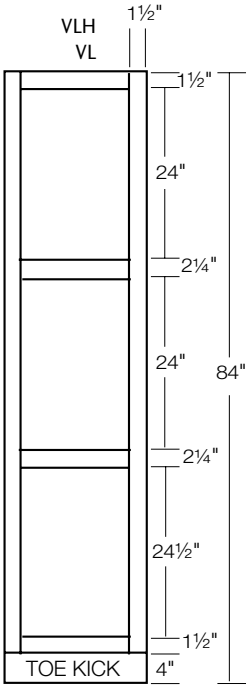

© Copyright StarMark Cabinetry FEBRUARY 2022

Face Frame Dimensions for Inset Vanity Cabinets

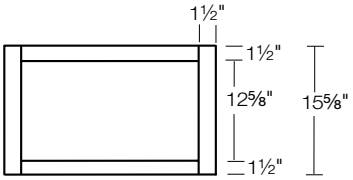

2VFWH_S

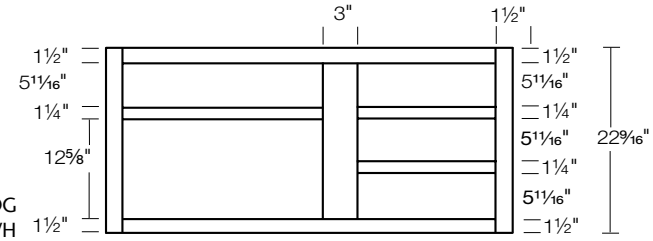

VSDG
2VSDWH

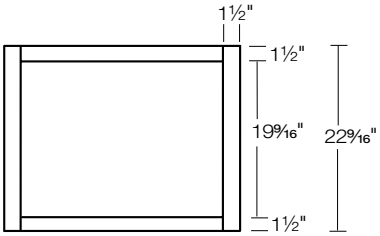

2VFWH_T

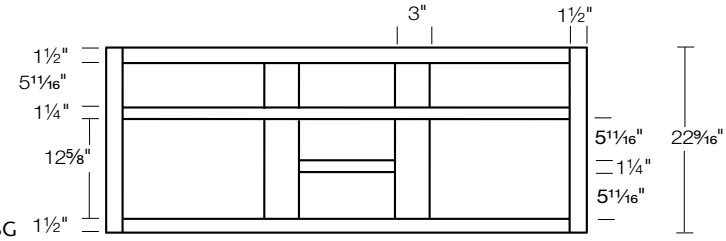

2VDSG

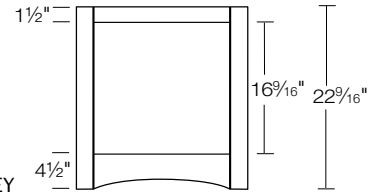

2VSGEY

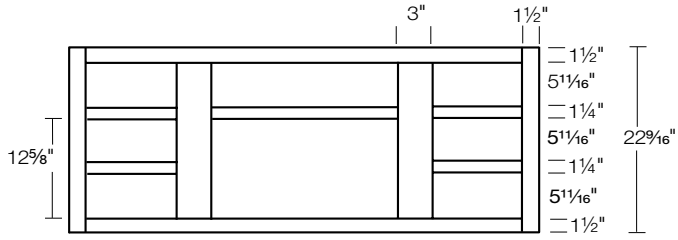

2VCDG

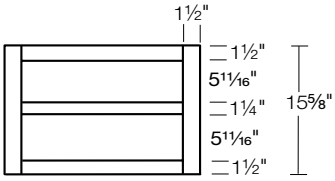

V2DWH_S

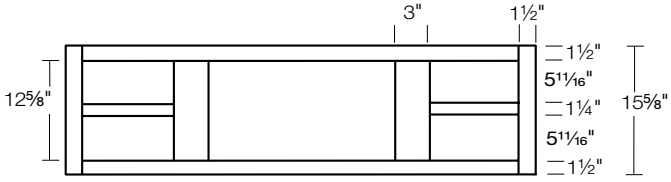

2VCDGP
2V4CWH

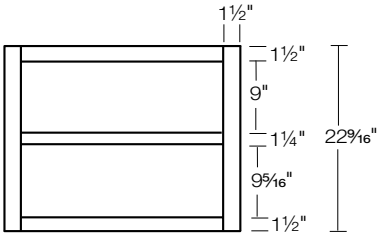

V2DWH_T

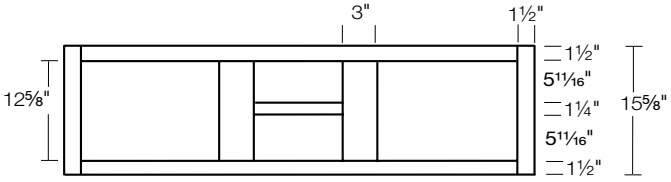

2VDSGP

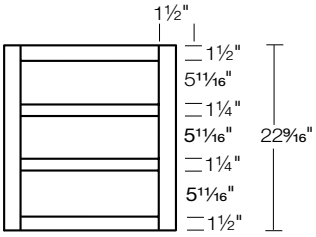

V3DWH

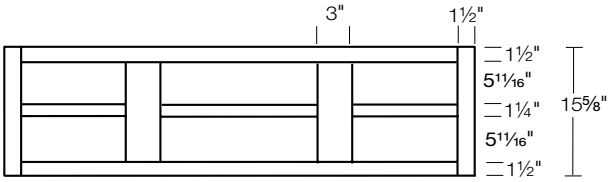

VG6DP
V6DWH

© Copyright StarMark Cabinetry FEBRUARY 2022

Face Frame Dimensions for Inset Vanity Cabinets

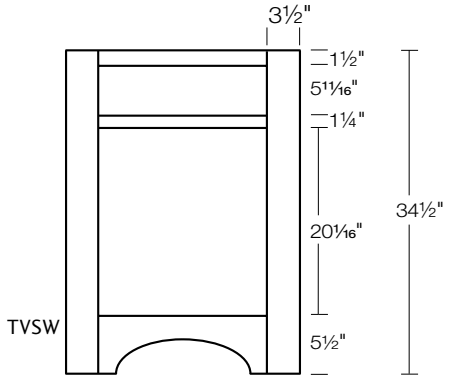

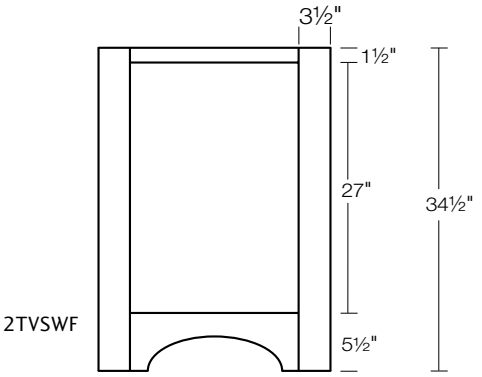

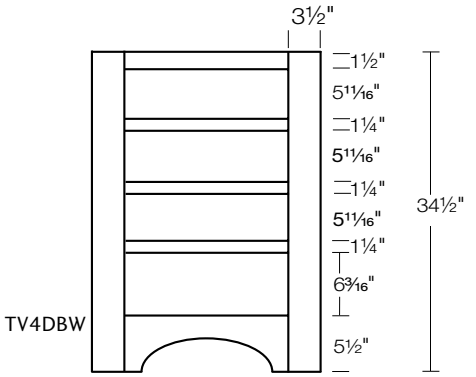

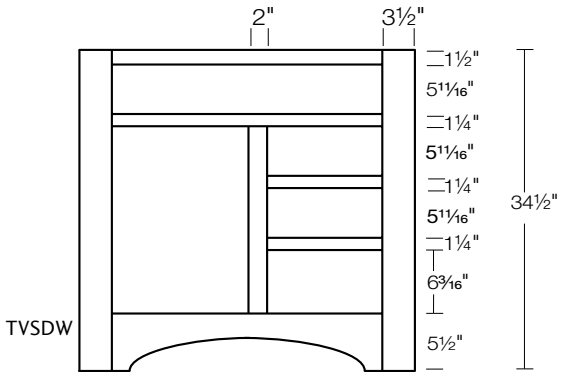

© Copyright StarMark Cabinetry FEBRUARY 2022

Inset Vanity Cabinet Alignment Door and Drawer Sizing

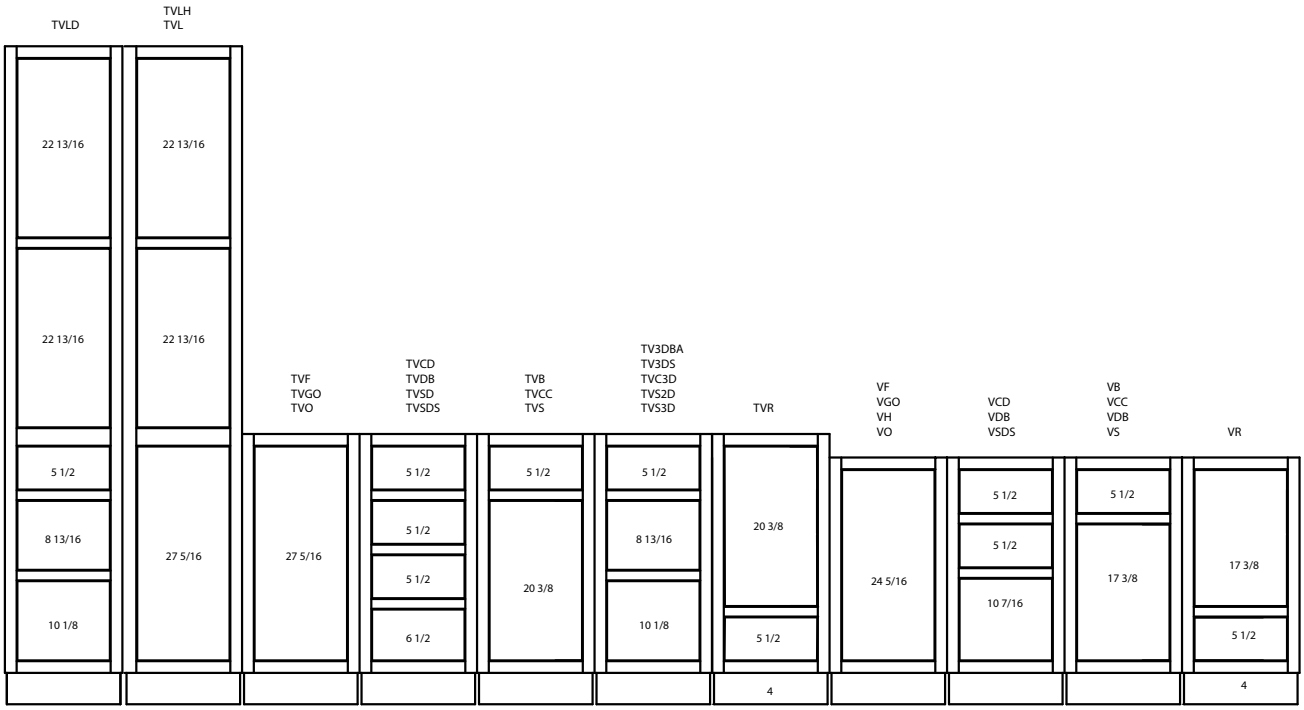

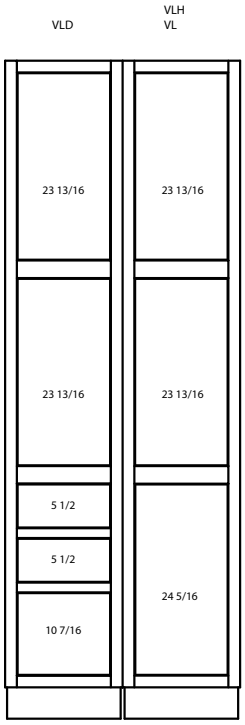

© Copyright StarMark Cabinetry **FEBRUARY 2022**

Use Space for Notes

© Copyright StarMark Cabinetry **FEBRUARY 2022**

STARMARK®
CABINETRY

HOODS, MULLION DOORS AND MORE

MORE custom mullion doors & insert doors!

SIMPLIFIED PRICING

Finish upcharges are now 5%, 10%, 15% or 25%

We added more than **500 WOOD HOODS**. There is a hood for every kitchen budget in our 2021 catalog!

© StarMark Cabinetry 2021 March 2021

custom mullion and insert doors

- Block 9580 Bow, Ellipse, Gothic, Pendent, Portal II, Stacked Crossing, Stacked Window
- Block 9523 Thornton X Insert Door

BOW
MBO

ELLIPSE
MEP

GOTHIC
MGH

PENDENT
MPD

PORTAL II
MPT

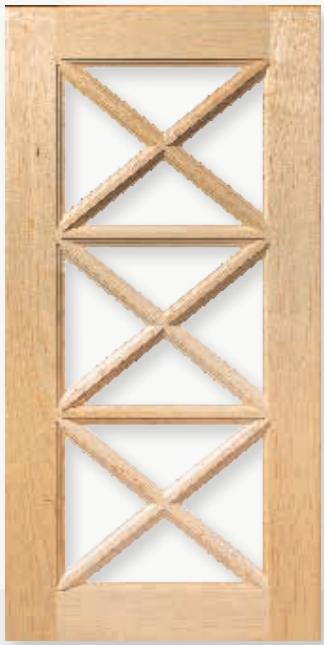

STACKED CROSSING
MCX

STACKED WINDOW
MSW

THORNTON X
THMCR

See Price & Reference Catalog for additional details and ordering information.

wood hood expansion

WOOD HOODS
We added more than 500 wood hoods. There is a hood for every kitchen budget in our 2021 catalog!

- Block 2672 Artisan Hood
- Block 2677 Euro Hood
- Block 2678 Contempora Hood
- Block 2670 Stanisci Hoods Series BX, C and FX
- Block 2654 Mantel Range Hood

ARTISAN HOOD
ARTH

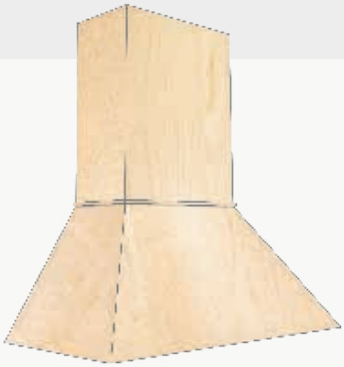

EURO HOOD
EUROH

CONTEMPORA HOOD
CTEMPO

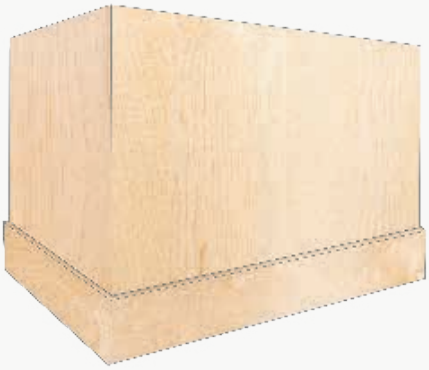

BX SERIES
6 hoods to choose from,
BXSS shown above

C SERIES
8 hoods to choose from,
CHW shown above

FX SERIES
11 hoods to choose from,
FXUP_3P shown above

MANTEL RANGE HOOD
MRH

LOWER PRICES!

In addition, list prices on select E Series and G Series Stanisci Hoods are reduced.

See Price & Reference Catalog for additional details and ordering information.

simplified upcharges

SIMPLIFIED FINISH PRICING

Finish upcharges are now 5%, 10%, 15% or 25%

Tinted Varnish (paint)	5%
Matte Sheen	5%
Stain with Glaze	10%
Tinted Varnish with Glaze	15%
Cottage	15%
Amaretto	15%
Old World	15%
Chateaux	15%
Homestead	15%
Villa	15%
Antiquity	15%
Weathered	15%
Light Chain Distressing	10%
Spattering	10%
Custom Stain	10%
Custom Stain with Glaze	20%*
Custom Tinted Varnish (paint)	15%*
Custom Tinted Varnish with Glaze	25%*
Custom Specialty Finish	25%*

*There may be other fees associated with custom finishes that still apply to custom finish orders.

ACCESSORY MODIFICATIONS

Use new Accessory Modification to modify dozens of internal accessories.

Block 9085 **ACMOD** 35% upcharge

Digital Catalog

- The Digital Catalog on OneTouch includes these new products.
- OneTouch is at https://www.mbci1touch.com/

How to specify these new products in 2020

These new products are available in the SMC2103 2020 catalog.

- The latest 2020 catalog files are posted on OneTouch includes these new products.
- An updated Norcraft Order Form is posted on OneTouch.

Warranty

StarMark Cabinetry's Construction, Materials and all Finishes are covered by a Limited Lifetime Warranty.

Index

Description	Nomenclature	Page
Angle End Wall	AEW	C-71
Angle End What Not Shelf	AEWNS	C-122
Angle Wall	AW	C-70
Angle What Not Shelf	AWNS	C-122
Apothecary Drawers	AD	C-123
Apothecary Drawers Vertical with Dovetails	ADVX	C-123
Artisan Hood	ARTH	C-114
Asymmetrical Square Wall	ASCW	C-31
Blower for Wood Hood	RABLOWER	C-117
Bookcase	CCW	C-120
Bookcase	CCWF	C-118
Bookcase with Beaded Back	CCWF_BB	C-119
Bookcase with Beaded Back	CCW_BB	C-120
Chimney Hood Liner/Blower	CHOODLIN	C-117
Chimney Hood with Straight Valance	CHSVL	C-73
Contempora Hood	CTEMPO	C-116
Criss Cross Wine Rack	XXW	C-60
Criss Cross Wine Rack above Doors	XXWSK	C-59
Criss Cross Wine Rack below Doors	SKXXW	C-60
Curved In Wall	CIW	C-68
Curved In Wall with Open Shelves	CIXW	C-68
Curved Out Wall	COW	C-69
Curved Out Wall with Open Shelves	COXW	C-69
Curved Out What Not Shelf	CWNS	C-121
Damper	2303	C-117
Deep Diagonal Wall	DDW	C-33
Deep Diagonal Wall with Door	DDWDR	C-40
Deep Diagonal Wall with Drawers	DDW3D	C-41
Deep Diagonal Wall with Lift Up Door	DDWDLU	C-35
Deep Diagonal Wall with Tambour	DDWT	C-38
Deep Diagonal Wall with Wood Trays	DDWLW	C-42
Deep Diagonal Wall with Wood Trays and Door	DDWLD	C-47
Deep Diagonal Wall with Wood Trays and Lift Up Door	DDWLDU	C-37
Diagonal Wall	DW	C-33
Diagonal Wall Chrome/Wood Lazy Susan with Tambour	DWCWLT	C-45
Diagonal Wall Stacked Cabinet	DWSCK	C-47
Diagonal Wall with Chrome/Wood Lazy Susan	DWCWL	C-43
Diagonal Wall with Chrome/Wood Lazy Susan and Door	DWWLDR	C-44
Diagonal Wall with Chrome/Wood Lazy Susan and Lift Up Door	DWLDRU	C-36
Diagonal Wall with Door	DWDR	C-39
Diagonal Wall with Drawers	DW3D	C-39
Diagonal Wall with Lazy Susan	DWL	C-41
Diagonal Wall with Lift Up Door	DWDRLU	C-34
Diagonal Wall with Tambour	DWT	C-37
Diagonal Wall with Wood Trays	DWLW	C-42
Diagonal Wall with Wood Trays and Door	DLWDR	C-43
Diagonal Wall with Wood Trays and Drawers	DWLW3D	C-45
Diagonal Wall with Wood Trays and Lift Up Door	DLWDLU	C-35
Diagonal Wall with Wood Trays and Tambour	DWLWT	C-46
Ductless Conversion Kit	DCK1	C-117
Euro Hood	EUROH	C-116
Four Door Wall	4W	C-12-13
Hearth Hood Style A	HHOODA	C-76
Hearth Hood Style B	HHOODB	C-77
Hood Liner	RALINER	C-117
Mantel Hood	MH	C-74
Mantel Hood Square	MHS	C-74
Mantel Range Hood	MRH	C-75
Microwave Diagonal Wall	MDW	C-58
Microwave Diagonal Wall with Drawer	MDWDW	C-59
Microwave Garage	MG	C-57
Microwave Garage with Appliance Doors	MGDR	C-58
Microwave Wall	MW	C-56
Modern Farmhouse Tapered Hood with Chimney	MFT	C-114
Modern Farmhouse Tapered Hood with Chimney and Brackets	MFT_BKT	C-115
Modern Farmhouse Straight Hood	MFS	C-115
Modern Farmhouse Straight Hood with Brackets	MFS_BKT	C-115
Organizer	XW	C-66-67
Organizer with Book Shelf	XCW	C-67
Organizer with Book Shelf and Flip Down Header	XCWF	C-67
Organizer with Flip Down Header	XWF	C-66-67
Refrigerator Wall	RW	C-15-16
Refrigerator Wall with Tip Up Hinges	RWTU	C-17
Refrigerator Wall with Tray Dividers	RWTD	C-17
Roll Top Storage	TRT	C-48
Spice Shelf Wall	SSW	C-19
Square Corner Wall	SCW	C-30
Square Corner Wall with Appliance Door	SCWDR	C-32
Square Wall Blind Corner	SW	C-25-30
Square What Not Shelf	SWNS	C-121
Stacked Square Corner Wall	SCWSCK	C-32
Stacked Wall Cabinet	WSCK	C-21-22
Stacked Wall Cabinet with Open Shelf Below	WSKXR	C-22-23
Standard Wall	W	C-5-10
Stanisci Wood Hood		C-78-113
Tambour Appliance Garage	TAG	C-48
Tapered Hood Liner	TRALINER	C-117
Tapered Wood Hood	TH	C-72
Three Door Wall	3W	C-11-12
Wall Angled Corner	WAC	C-70
Wall Cabinet with Bifold Door	W_BF	C-20
Wall Cabinet with Tip Up Door	W_TU	C-20
Wall Drawer	WDRW	C-124
Wall Drawer	WDRW	C-124
Wall Message Center	WMSG	C-65
Wall Plate Rack	WPR	C-64-65
Wall Stacked Tower Style A	WSTA	C-24
Wall Stacked Tower Style B	WSTB	C-24
Wall Vertical Wine Rack	WVWR	C-61
Wall Wine	WW	C-62
Wall Wine Cubes	W_CUB	C-61
Wall Wine Diagonal	WWDIA	C-62
Wall with Appliance Door	WDR	C-50
Wall with Appliance Door Vertical Lift Up	WDRLU	C-51
Wall with Double Wine Rack Top	W2W	C-63
Wall with One Drawer	W1D	C-52-53
Wall with Stem Glass Rack	WSG	C-64
Wall with Tambour	WT	C-49
Wall with Three Drawers	W3D	C-55
Wall with Two Drawers	W2D	C-54
Wall with Wine Rack Bottom	WXW	C-62
Wall with Wine Rack Top	W1W	C-63
Wall Z Door	WZ	C-71

© Copyright StarMark Cabinetry MARCH 2021

Index

Description	Nomenclature	Page	Description	Nomenclature	Page
Wood Hood	H	C-72			
Wood Hood	H	C-73			

© Copyright StarMark Cabinetry MARCH 2021

Wall Cabinet Alignment

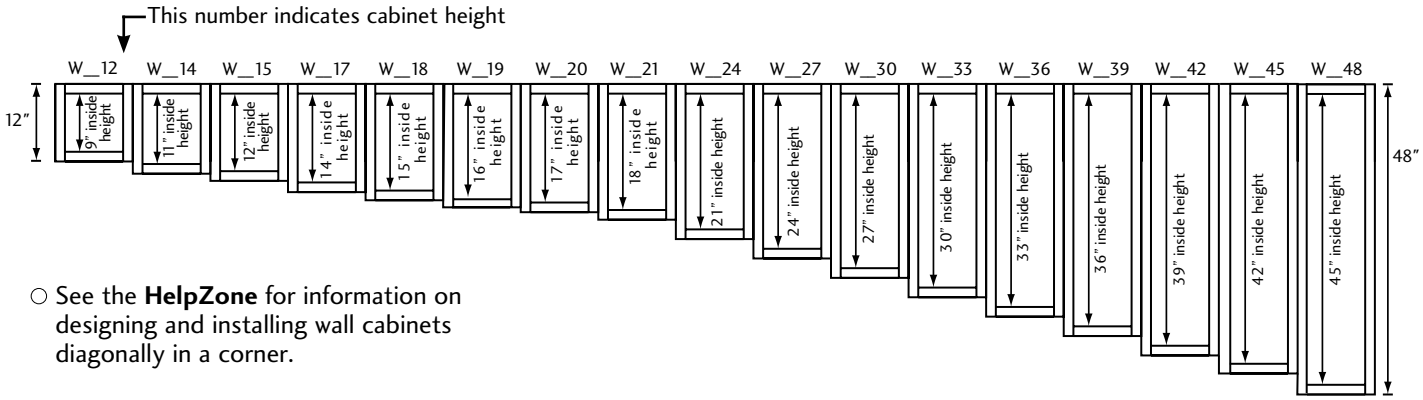

○ See the **HelpZone** for information on designing and installing wall cabinets diagonally in a corner.

Standards for Single Door Wall Cabinets

○ Depth is 12".

○ Vertical stiles on the cabinet frame are 1½" wide.

○ Horizontal rails on the cabinet frame are 1½" high.

○ Subtract 3" from the cabinet width to obtain the width of the opening for any **Single Door** standard wall cabinet.

○ Subtract 3" from the cabinet height to obtain the height of the opening for any **Single Door** standard wall cabinet.

○ **Mortise and tenon doors greater than 42" high will have a center rail.**

○ Mitered doors that are 42" or higher will receive a single panel door.

Single Door Standard Wall Cabinet

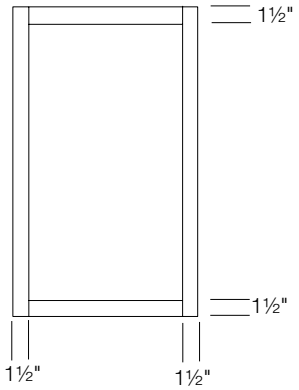

Compute the door opening

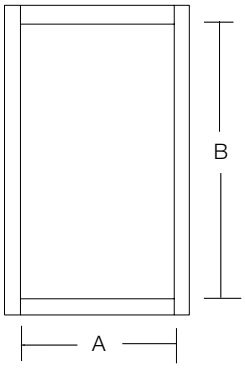

Opening height (B) is cabinet height minus 3".

Opening width (A) is cabinet width minus 3".

Square Wall Cabinet with single opening

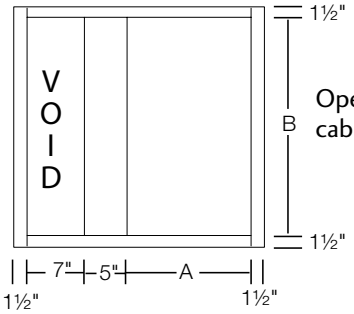

Opening height (B) is cabinet height minus 3".

	Width (A)
SW24__	9
SW27__	12
SW30__	15
SW33__	18
SW36__	21
SW42__	27
SW45__	30
SW48__	33
2SW39__	24
2SW42__	27
2SW48__	33
PSW27__	12
PSW30__	15
PSW33__	18
PSW36__	21
2PSW42__	27

© Copyright StarMark Cabinetry MARCH 2021

WALL CABINETS

Alignment, Standards and Dimensions

STARMARK CABINETRY

Wall Cabinet Alignment

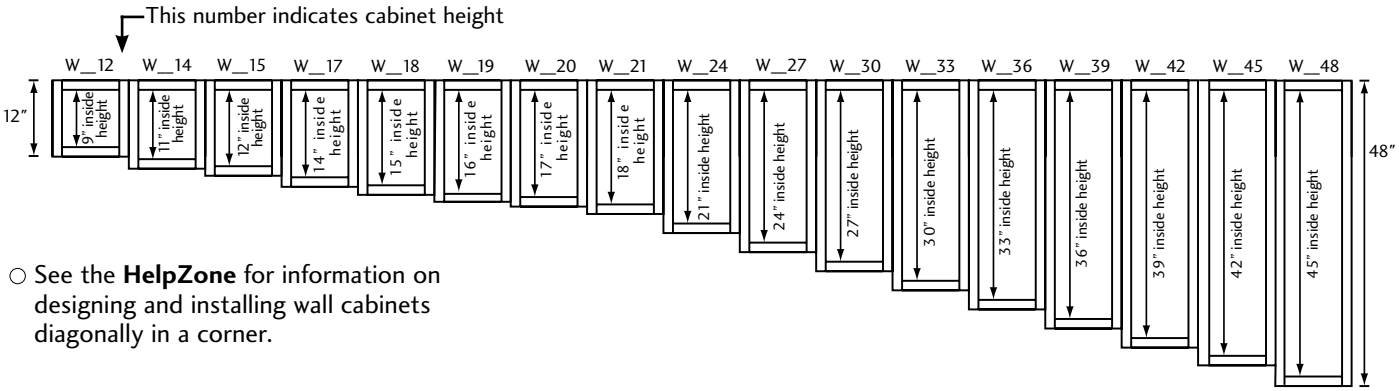

○ See the **HelpZone** for information on designing and installing wall cabinets diagonally in a corner.

Standards for Double Door Wall Cabinets

○ Depth is 12".

○ Vertical stiles on the cabinet frame are 1½" wide.

○ Horizontal rails on the cabinet frame are 1½" high.

○ Vertical center mullions are 3" wide.

○ A prefix of "2" denotes a cabinet built with butt doors. The cabinet is considered "full access" because there is no center mullion.

○ Butt doors are not available in cabinets that are wider than 42". Cabinets wider than 42" will have a fixed center mullion. A fixed center mullion is necessary for stability.

○ To compute the width of the opening on a **Double Door** standard wall cabinet, subtract 6" from the cabinet width and divide by 2.

○ To compute the width of the opening on a **Butt Door** standard wall cabinet, subtract 3" from the cabinet width.

○ Subtract 3" from the cabinet height to obtain the height of the door opening.

○ **Mortise and tenon doors greater than 42" high will have a center rail.**

○ Mitered doors that are 42" or higher will receive a single panel door.

Double Door Standard Wall Cabinet

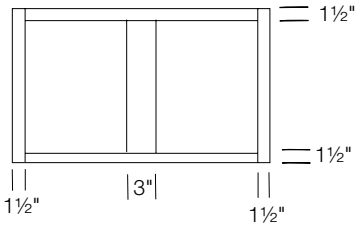

Butt Door Standard Wall Cabinet

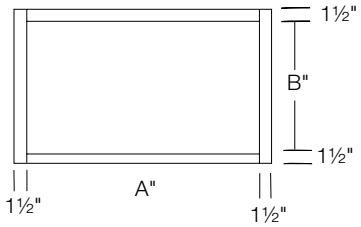

Compute the door openings

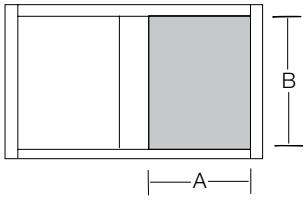

Opening height (B) is cabinet height minus 3".

Opening width (A) is cabinet width minus 6". Divide by two.

Compute the door openings

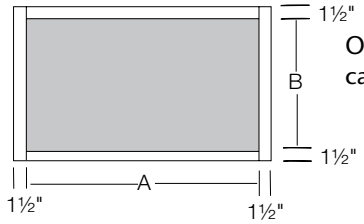

Opening height (B) is cabinet height minus 3".

Opening width (A) is cabinet width minus 3".

© Copyright StarMark Cabinetry MARCH 2021

I available in Inset cabinetry

Block 1010 Standard Wall

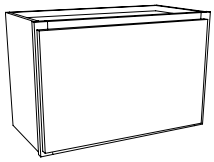

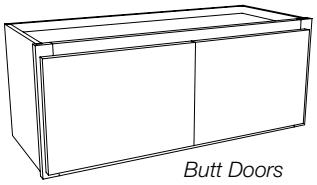

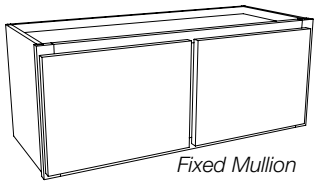

Single Door	Butt Doors	Fixed Mullion
W0912	**2W2412**	**W3012**
W1212	**2W2712**	**W3312**
W13512	**2W3012**	**W3612**
W1512	**2W3312**	**W3912**
W16512	**2W3612**	**W4212**
W1812	**2W3912**	**W4512**
W19512	**2W4212**	**W4812**
W2112		
W22512		
W2412		

DESIGN CONSIDERATIONS

12" High - 12" Deep

- No shelf

HOW TO ORDER

- Specify **L** or **R** hinging on Single Door cabinet
- W135__, W165__,W195__, W225__ are half sizes. For example, W135__ is 13½ wide.
- Pricing P-1

NOTES/CAUTION

- 9" wide cabinets are not available in inset.

Block 1013 Standard Wall

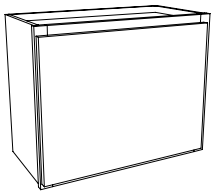

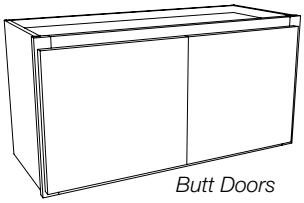

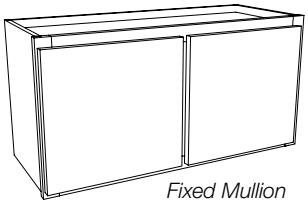

Single Door	Butt Doors	Fixed Mullion
W0915	**2W2415**	**W3015**
W1215	**2W2715**	**W3315**
W13515	**2W3015**	**W3615**
W1515	**2W3315**	**W3915**
W16515	**2W3615**	**W4215**
W1815	**2W3915**	**W4515**
W19515	**2W4215**	**W4815**
W2115		
W22515		
W2415		

DESIGN CONSIDERATIONS

15" High - 12" Deep

- No shelf

HOW TO ORDER

- Specify **L** or **R** hinging on Single Door cabinet
- W135__, W165__,W195__, W225__ are half sizes. For example, W135__ is 13½ wide.
- Pricing P-1

NOTES/CAUTION

- 9" wide cabinets are not available in inset.

Block 1016 Standard Wall

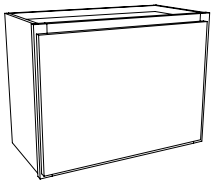

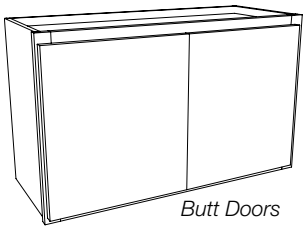

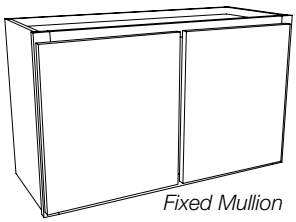

Single Door	Butt Doors	Fixed Mullion
W0918	**2W2418**	**W3018**
W1218	**2W2718**	**W3318**
W13518	**2W3018**	**W3618**
W1518	**2W3318**	**W3918**
W16518	**2W3618**	**W4218**
W1818	**2W3918**	**W4518**
W19518	**2W4218**	**W4818**
W2118		
W22518		
W2418		

DESIGN CONSIDERATIONS

18" High - 12" Deep

- No shelf
- In Modern Overlay 18" high wall cabinets will not align with WSCK cabinets. Use 19" high cabinets for proper alignment. 18" high cabinets will align with WSCK cabinets in Inset and Traditional Overlay.

HOW TO ORDER

- Specify **L** or **R** hinging on Single Door cabinet
- W135__, W165__,W195__, W225__ are half sizes. For example, W135__ is 13½ wide.
- Pricing P-2

NOTES/CAUTION

- 9" wide cabinets are not available in inset.

© Copyright StarMark Cabinetry MARCH 2021

Block 1017 Standard Wall

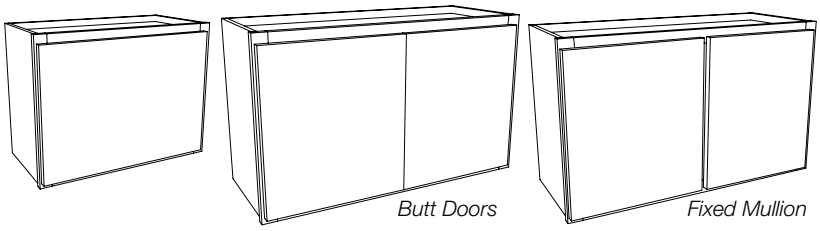

Single Door	Butt Doors	Fixed Mullion
W0919	**2W2419**	**W3019**
W1219	**2W2719**	**W3319**
W13519	**2W3019**	**W3619**
W1519	**2W3319**	**W3919**
W16519	**2W3619**	**W4219**
W1819	**2W3919**	**W4519**
W19519	**2W4219**	**W4819**
W2119		
W22519		
W2419		

DESIGN CONSIDERATIONS

19" High - 12" Deep

- No shelf
- Cabinets designed to align with WSCK cabinets in Modern Overlay.

HOW TO ORDER

- Specify **L** or **R** hinging on Single Door cabinet
- W135__, W165__,W195__, W225__ are half sizes. For example, W135__ is 13½ wide.
- Pricing P-2

NOTES/CAUTION

- 9" wide cabinets are not available in inset.

Block 1018 Standard Wall

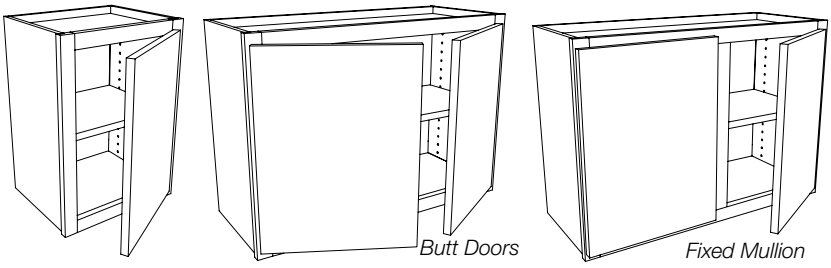

Single Door	Butt Doors	Fixed Mullion
W0921	**2W2421**	**W3021**
W1221	**2W2721**	**W3321**
W13521	**2W3021**	**W3621**
W1521	**2W3321**	**W3921**
W16521	**2W3621**	**W4221**
W1821	**2W3921**	**W4521**
W19521	**2W4221**	**W4821**
W2121		
W22521		
W2421		

DESIGN CONSIDERATIONS

21" High - 12" Deep

- 1 adjustable shelf

HOW TO ORDER

- Specify **L** or **R** hinging on Single Door cabinet
- W135__, W165__,W195__, W225__ are half sizes. For example, W135__ is 13½ wide.
- Pricing P-3

NOTES/CAUTION

- 9" wide cabinets are not available in inset.

Block 1020 Standard Wall

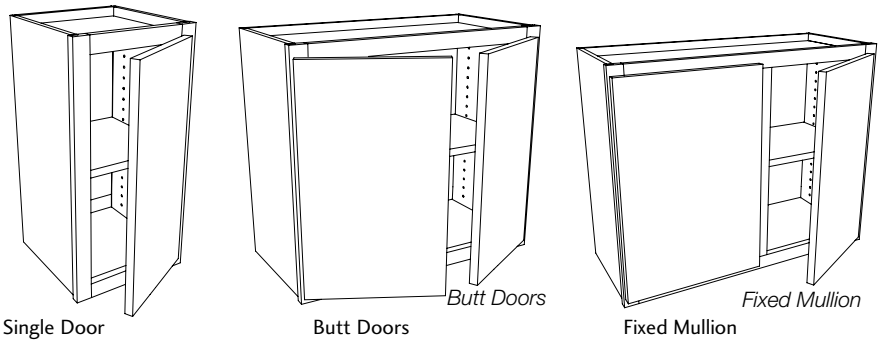

Single Door	Butt Doors	Fixed Mullion
W0924	**2W2424**	**W3024**
W1224	**2W2724**	**W3324**
W13524	**2W3024**	**W3624**
W1524	**2W3324**	**W3924**
W16524	**2W3624**	**W4224**
W1824	**2W3924**	**W4524**
W19524	**2W4224**	**W4824**
W2124		
W22524		
W2424		

DESIGN CONSIDERATIONS

24" High - 12" Deep

- 1 adjustable shelf

HOW TO ORDER

- Specify **L** or **R** hinging on Single Door cabinet
- W135__, W165__,W195__, W225__ are half sizes. For example, W135__ is 13½ wide.
- Pricing P-3-4

NOTES/CAUTION

- 9" wide cabinets are not available in inset.

© Copyright StarMark Cabinetry MARCH 2021

Block 1025 Standard Wall

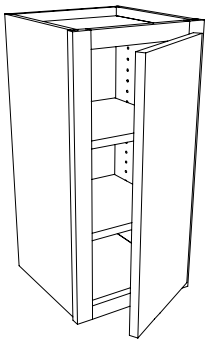

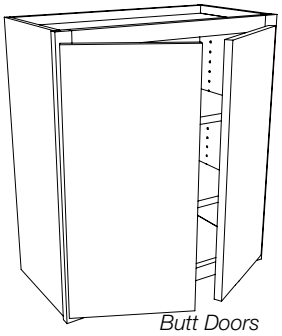

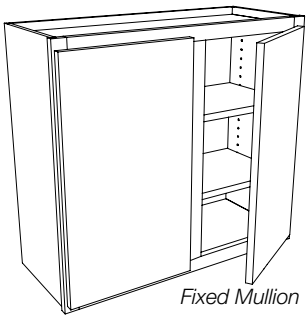

Single Door
W0927
W1227
W13527
W1527
W16527
W1827
W19527
W2127
W22527
W2427

Butt Doors
2W2427
2W2727
2W3027
2W3327
2W3627
2W3927
2W4227

Fixed Mullion
W3027
W3327
W3627
W3927
W4227
W4527
W4827

DESIGN CONSIDERATIONS

27" High - 12" Deep
- 2 adjustable shelves

HOW TO ORDER

- Specify **L** or **R** hinging on Single Door cabinet
- W135__, W165__,W195__, W225__ are half sizes. For example, W135__ is 13½ wide.
- Pricing P-4

NOTES/CAUTION

- 9" wide cabinets are not available in inset.

Block 1030 Standard Wall

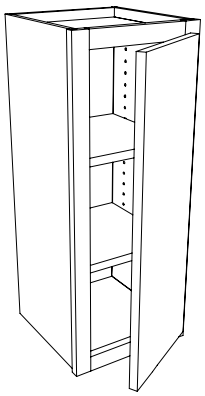

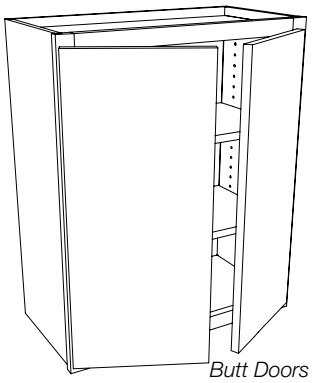

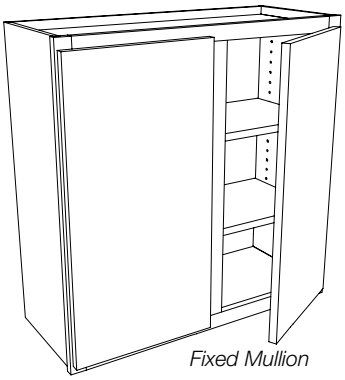

Single Door
W0930
W1230
W13530
W1530
W16530
W1830
W19530
W2130
W22530
W2430

Butt Doors
2W2430
2W2730
2W3030
2W3330
2W3630
2W3930
2W4230

Fixed Mullion
W3030
W3330
W3630
W3930
W4230
W4530
W4830

DESIGN CONSIDERATIONS

30" High - 12" Deep
- 2 adjustable shelves

HOW TO ORDER

- Specify **L** or **R** hinging on Single Door cabinet
- W135__, W165__,W195__, W225__ are half sizes. For example, W135__ is 13½ wide.
- Pricing P-5

NOTES/CAUTION

- 9" wide cabinets are not available in inset.

© Copyright StarMark Cabinetry MARCH 2021

Block 1033 Standard Wall

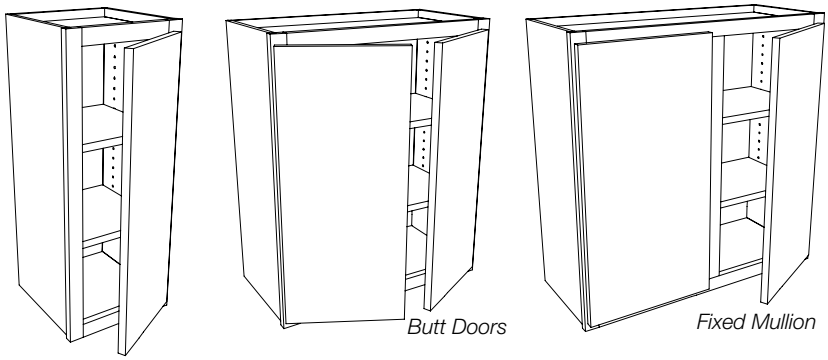

Single Door	Butt Doors	Fixed Mullion
W0933	**2W2433**	**W3033**
W1233	**2W2733**	**W3333**
W13533	**2W3033**	**W3633**
W1533	**2W3333**	**W3933**
W16533	**2W3633**	**W4233**
W1833	**2W3933**	**W4533**
W19533	**2W4233**	**W4833**
W2133		
W22533		
W2433		

DESIGN CONSIDERATIONS

33" High - 12" Deep

- 2 adjustable shelves

HOW TO ORDER

- Specify **L** or **R** hinging on Single Door cabinet
- W135__, W165__,W195__, W225__ are half sizes. For example, W135__ is 13½ wide.
- Pricing P-5-6

NOTES/CAUTION

- 9" wide cabinets are not available in inset.

Block 1035 Standard Wall

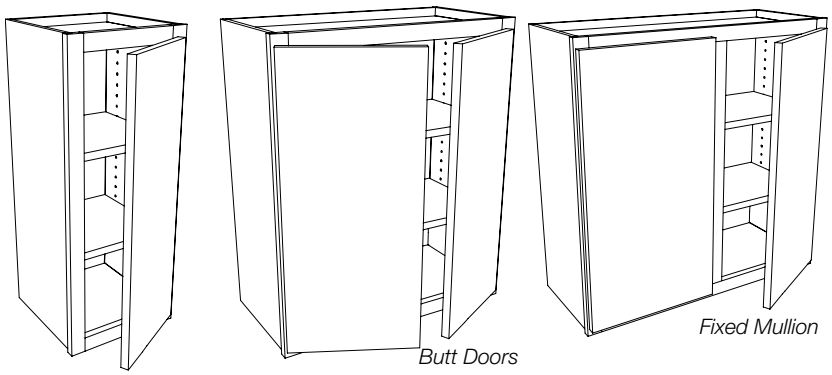

Single Door	Butt Doors	Fixed Mullion
W0936	**2W2436**	**W3036**
W1236	**2W2736**	**W3336**
W13536	**2W3036**	**W3636**
W1536	**2W3336**	**W3936**
W16536	**2W3636**	**W4236**
W1836	**2W3936**	**W4536**
W19536	**2W4236**	**W4836**
W2136		
W22536		
W2436		

DESIGN CONSIDERATIONS

36" High - 12" Deep

- 2 adjustable shelves

HOW TO ORDER

- Specify **L** or **R** hinging on Single Door cabinet
- W135__, W165__,W195__, W225__ are half sizes. For example, W135__ is 13½ wide.
- Pricing P-6

NOTES/CAUTION

- 9" wide cabinets are not available in inset.

© Copyright StarMark Cabinetry MARCH 2021

Block 1039 Standard Wall

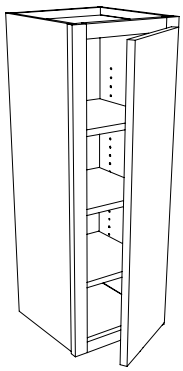

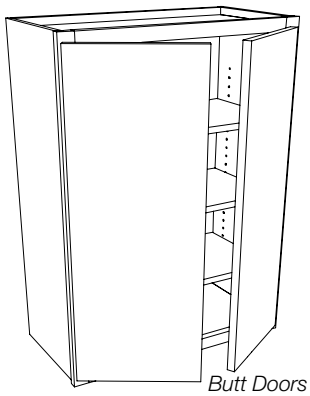

Butt Doors

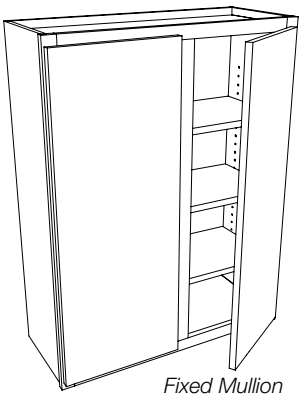

Fixed Mullion

Single Door	Butt Doors	Fixed Mullion
W0939	**2W2439**	**W3039**
W1239	**2W2739**	**W3339**
W13539	**2W3039**	**W3639**
W1539	**2W3339**	**W3939**
W16539	**2W3639**	**W4239**
W1839	**2W3939**	**W4539**
W19539	**2W4239**	**W4839**
W2139		
W22539		
W2439		

DESIGN CONSIDERATIONS

39" High - 12" Deep

- 3 adjustable shelves

HOW TO ORDER

- Specify **L** or **R** hinging on Single Door cabinet
- W135__, W165__,W195__, W225__ are half sizes. For example, W135__ is 13½ wide.
- Pricing P-7

NOTES/CAUTION

- 9" wide cabinets are not available in inset.

Block 1040 Standard Wall

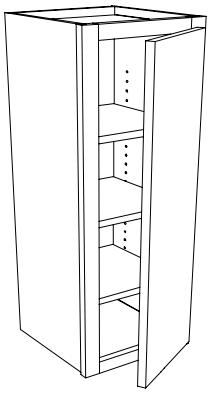

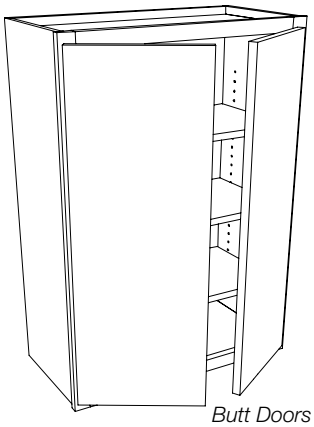

Butt Doors

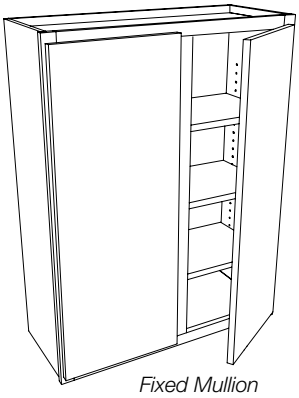

Fixed Mullion

Single Door	Butt Doors	Fixed Mullion
W0942	**2W2442**	**W3042**
W1242	**2W2742**	**W3342**
W13542	**2W3042**	**W3642**
W1542	**2W3342**	**W3942**
W16542	**2W3642**	**W4242**
W1842	**2W3942**	**W4542**
W19542	**2W4242**	**W4842**
W2142		
W22542		
W2442		

DESIGN CONSIDERATIONS

42" High - 12" Deep

- 3 adjustable shelves
- Mortise and tenon doors greater than 42" high will have a center rail.

HOW TO ORDER

- Specify **L** or **R** hinging on Single Door cabinet
- W135__, W165__,W195__, W225__ are half sizes. For example, W135__ is 13½ wide.
- Pricing P-7-8

NOTES/CAUTION

- 9" wide cabinets are not available in inset.

© Copyright StarMark Cabinetry MARCH 2021

Block 1041 Standard Wall

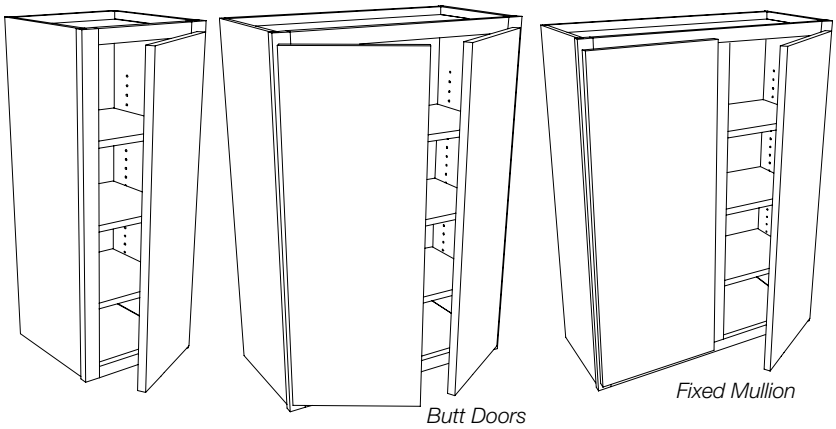

Single Door	Butt Doors	Fixed Mullion
W0945	**2W2445**	**W3045**
W1245	**2W2745**	**W3345**
W13545	**2W3045**	**W3645**
W1545	**2W3345**	**W3945**
W16545	**2W3645**	**W4245**
W1845	**2W3945**	**W4545**
W19545	**2W4245**	**W4845**
W2145		
W22545		
W2445		

DESIGN CONSIDERATIONS

45″ High - 12″ Deep

- 3 adjustable shelves
- Mortise and tenon doors greater than 42″ high will have a center rail.

HOW TO ORDER

- Specify **L** or **R** hinging on Single Door cabinet
- W135__, W165__,W195__, W225__ are half sizes. For example, W135__ is 13½ wide.
- Pricing P-8

NOTES/CAUTION

- 9″ wide cabinets are not available in inset.

Block 1042 Standard Wall

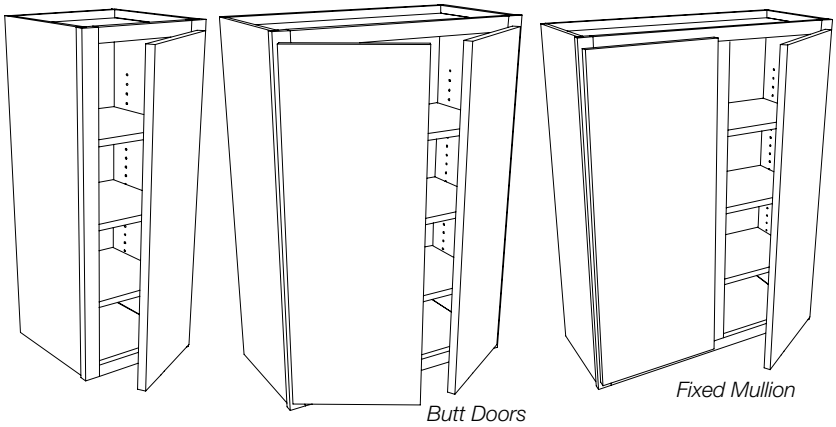

Single Door	Butt Doors	Fixed Mullion
W0948	**2W2448**	**W3048**
W1248	**2W2748**	**W3348**
W13548	**2W3048**	**W3648**
W1548	**2W3348**	**W3948**
W16548	**2W3648**	**W4248**
W1848	**2W3948**	**W4548**
W19548	**2W4248**	**W4848**
W2148		
W22548		
W2448		

DESIGN CONSIDERATIONS

48″ High - 12″ Deep

- 3 adjustable shelves
- Mortise and tenon doors greater than 42″ high will have a center rail.

HOW TO ORDER

- Specify **L** or **R** hinging on Single Door cabinet
- W135__, W165__,W195__, W225__ are half sizes. For example, W135__ is 13½ wide.
- Pricing P-9

NOTES/CAUTION

- 9″ wide cabinets are not available in inset.

© Copyright StarMark Cabinetry MARCH 2021

Block 1044 Three Door Wall

3W3627	**3W3630**
3W3927	**3W3930**
3W4227	**3W4230**
3W4527	**3W4530**
3W4827	**3W4830**
3W5127	**3W5130**
3W5427	**3W5430**
3W5727	**3W5730**
3W6027	**3W6030**
3W6327	**3W6330**
3W6627	**3W6630**
3W6927	**3W6930**
3W7227	**3W7230**

DESIGN CONSIDERATIONS

27", 30" High - 12" Deep

- 2 adjustable shelves
- Three equal openings
- Four adjustable shelves are included when partition is added to 51"-72" wide cabinets.

HOW TO ORDER

- Specify **L** or **R** hinging for all three doors, starting with the left door.
  For example: LRR (left door hinge left, middle door hinge right, right door hinge right.)
- Cabinets wider than 48" include a partition behind one center mullion. Specify **L** left or **R** right.
- Pricing P-10

Cabinet Width	Three equal openings
36"	9"
39"	10"
42"	11"
45"	12"
48"	13"
51"	14"
54"	15"
57"	16"
60"	17"
63"	18"
66"	19"
69"	20"
72"	21"

Block 1045 Three Door Wall

3W3633	**3W3636**
3W3933	**3W3936**
3W4233	**3W4236**
3W4533	**3W4536**
3W4833	**3W4836**
3W5133	**3W5136**
3W5433	**3W5436**
3W5733	**3W5736**
3W6033	**3W6036**
3W6333	**3W6336**
3W6633	**3W6636**
3W6933	**3W6936**
3W7233	**3W7236**

DESIGN CONSIDERATIONS

33", 36" High - 12" Deep

- 2 adjustable shelves
- Three equal openings
- Four adjustable shelves are included when partition is added to 51"-72" wide cabinets.

HOW TO ORDER

- Specify **L** or **R** hinging for all three doors, starting with the left door.
  For example: LRR (left door hinge left, middle door hinge right, right door hinge right.)
- Cabinets wider than 48" include a partition behind one center mullion. Specify **L** left or **R** right.
- Pricing P-11

Cabinet Width	Three equal openings
36"	9"
39"	10"
42"	11"
45"	12"
48"	13"
51"	14"
54"	15"
57"	16"
60"	17"
63"	18"
66"	19"
69"	20"
72"	21"

© Copyright StarMark Cabinetry MARCH 2021

Block 1046 Three Door Wall

I

3W3639	**3W3642**
3W3939	**3W3942**
3W4239	**3W4242**
3W4539	**3W4542**
3W4839	**3W4842**
3W5139	**3W5142**
3W5439	**3W5442**
3W5739	**3W5742**
3W6039	**3W6042**
3W6339	**3W6342**
3W6639	**3W6642**
3W6939	**3W6942**
3W7239	**3W7242**

DESIGN CONSIDERATIONS

39", 42" High - 12" Deep

- 3 adjustable shelves
- Three equal openings
- Six adjustable shelves are included when partition is added to 51"-72" wide cabinets.
- Mortise and tenon doors greater than 42" high will have a center rail.

HOW TO ORDER

- Specify **L** or **R** hinging for all three doors, starting with the left door.
  For example: LRR (left door hinge left, middle door hinge right, right door hinge right.)
- Cabinets wider than 48" include a partition behind one center mullion. Specify **L** left or **R** right.
- Pricing P-12

Cabinet Width	Three equal openings
36"	9"
39"	10"
42"	11"
45"	12"
48"	13"
51"	14"
54"	15"
57"	16"
60"	17"
63"	18"
66"	19"
69"	20"
72"	21"

Block 1048 Four Door Wall

I

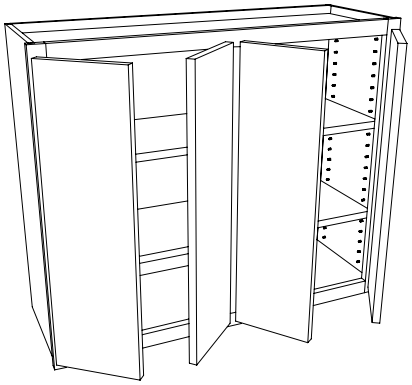

Butt Doors	Butt Doors
4W4827	**4W4830**
4W5127	**4W5130**
4W5427	**4W5430**
4W5727	**4W5730**
4W6027	**4W6030**
4W6327	**4W6330**
4W6627	**4W6630**
4W6927	**4W6930**
4W7227	**4W7230**

DESIGN CONSIDERATIONS

27", 30" High - 12" Deep

- 2 adjustable shelves
- Four adjustable shelves are included when partition is added to 51"-72" wide cabinets.
- Two sets of butt doors
- Two equal openings
- Cabinets wider than 48" include a partition separating the two door openings.

HOW TO ORDER

- Pricing P-12

Cabinet Width	Two equal openings
48"	21"
51"	22½"
54"	24"
57"	25½"
60"	27"
63"	28½"
66"	30"
69"	31½"
72"	33"

© Copyright StarMark Cabinetry MARCH 2021

I available in Inset cabinetry

Block 1049 Four Door Wall

I

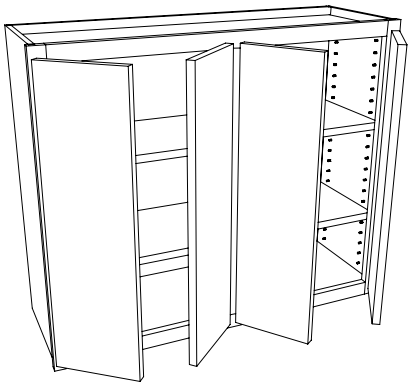

Butt Doors
4W4833
4W5133
4W5433
4W5733
4W6033
4W6333
4W6633
4W6933
4W7233

Butt Doors
4W4836
4W5136
4W5436
4W5736
4W6036
4W6336
4W6636
4W6936
4W7236

DESIGN CONSIDERATIONS

33", 36" High - 12" Deep

- 2 adjustable shelves
- Four adjustable shelves are included when partition is added to 51"-72" wide cabinets.
- Two sets of butt doors
- Two equal openings
- Cabinets wider than 48" include a partition separating the two door openings.

HOW TO ORDER

- Pricing P-13

Cabinet Width	Two equal openings
48"	21"
51"	22½"
54"	24"
57"	25½"
60"	27"
63"	28½"
66"	30"
69"	31½"
72"	33"

Block 1050 Four Door Wall

I

Butt Doors
4W4839
4W5139
4W5439
4W5739
4W6039
4W6339
4W6639
4W6939
4W7239

Butt Doors
4W4842
4W5142
4W5442
4W5742
4W6042
4W6342
4W6642
4W6942
4W7242

DESIGN CONSIDERATIONS

39", 42" High - 12" Deep

- 3 adjustable shelves
- Six adjustable shelves are included when partition is added to 51"-72" wide cabinets.
- Two sets of butt doors
- Two equal openings
- Cabinets wider than 48" include a partition separating the two door openings.
- Mortise and tenon doors greater than 42" high will have a center rail.

HOW TO ORDER

- Pricing P-13

Cabinet Width	Two equal openings
48"	21"
51"	22½"
54"	24"
57"	25½"
60"	27"
63"	28½"
66"	30"
69"	31½"
72"	33"

© Copyright StarMark Cabinetry MARCH 2021

Block 1054 Peninsula Wall

I

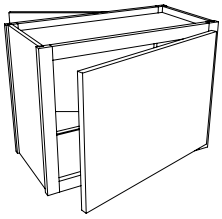

Single Door
PW2418

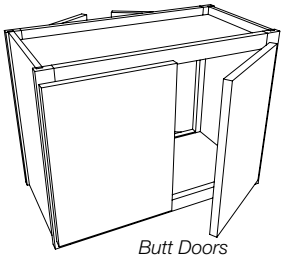

Butt Doors
2PW2418
2PW2718
2PW3018
2PW3318
2PW3618

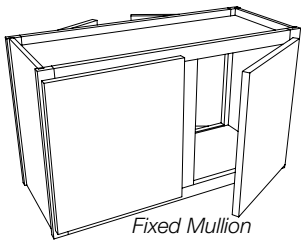

Fixed Mullion
PW3618

DESIGN CONSIDERATIONS

18" High - 12" Deep

- No shelf
- Peninsula single door is hinged on the same side of the cabinet as kitchen single door

HOW TO ORDER

- Specify **L** or **R** hinging on Single Door cabinet
- Pricing P-14

Block 1055 Peninsula Wall

I

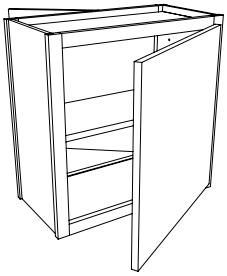

Single Door
PW1824
PW2124
PW2424

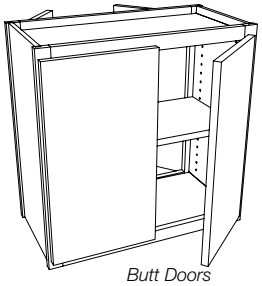

Butt Doors
2PW2424
2PW2724
2PW3024
2PW3324
2PW3624
2PW3924
2PW4224

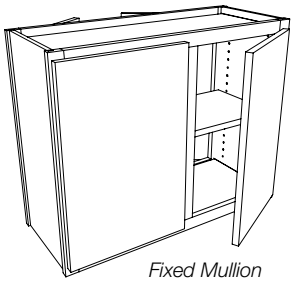

Fixed Mullion
PW3024
PW3624
PW3924
PW4224
PW4524
PW4824

DESIGN CONSIDERATIONS

24" High - 12" Deep

- 1 adjustable shelf
- Peninsula single door is hinged on the same side of the cabinet as kitchen single door

HOW TO ORDER

- Specify **L** or **R** hinging on Single Door cabinet
- Pricing P-14

© Copyright StarMark Cabinetry MARCH 2021

I available in Inset cabinetry

Block 1080 Refrigerator Wall

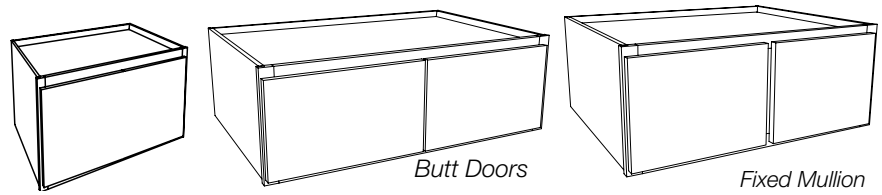

Single Door	Butt Doors		Fixed Mullion	
RW0912	**2RW2412**	**2RW3912**	**RW3012**	**RW4512**
RW1212	**2RW2712**	**2RW4212**	**RW3312**	**RW4812**
RW1512	**2RW3012**		**RW3612**	
RW1812	**2RW3312**		**RW3712**	
RW2112	**2RW3612**		**RW3912**	
RW2412	**2RW3712**		**RW4212**	
RW0914	**2RW2414**	**2RW3914**	**RW3014**	**RW4514**
RW1214	**2RW2714**	**2RW4214**	**RW3314**	**RW4814**
RW1514	**2RW3014**		**RW3614**	
RW1814	**2RW3314**		**RW3714**	
RW2114	**2RW3614**		**RW3914**	
RW2414	**2RW3714**		**RW4214**	
RW0915	**2RW2415**	**2RW3915**	**RW3015**	**RW4515**
RW1215	**2RW2715**	**2RW4215**	**RW3315**	**RW4815**
RW1515	**2RW3015**		**RW3615**	
RW1815	**2RW3315**		**RW3715**	
RW2115	**2RW3615**		**RW3915**	
RW2415	**2RW3715**		**RW4215**	
RW0917	**2RW2417**	**2RW3917**	**RW3017**	**RW4517**
RW1217	**2RW2717**	**2RW4217**	**RW3317**	**RW4817**
RW1517	**2RW3017**		**RW3617**	
RW1817	**2RW3317**		**RW3717**	
RW2117	**2RW3617**		**RW3917**	
RW2417	**2RW3717**		**RW4217**	
RW0918	**2RW2418**	**2RW3918**	**RW3018**	**RW4518**
RW1218	**2RW2718**	**2RW4218**	**RW3318**	**RW4818**
RW1518	**2RW3018**		**RW3618**	
RW1818	**2RW3318**		**RW3718**	
RW2118	**2RW3618**		**RW3918**	
RW2418	**2RW3718**		**RW4218**	
RW0919	**2RW2419**	**2RW3919**	**RW3019**	**RW4519**
RW1219	**2RW2719**	**2RW4219**	**RW3319**	**RW4819**
RW1519	**2RW3019**		**RW3619**	
RW1819	**2RW3319**		**RW3719**	
RW2119	**2RW3619**		**RW3919**	
RW2419	**2RW3719**		**RW4219**	

DESIGN CONSIDERATIONS

24" Deep

- 12"-19" high cabinets have no shelves
- In Modern Overlay 18" high wall cabinets will not align with WSCK cabinets. Use 19" high cabinets for proper alignment. 18" high cabinets will align with WSCK cabinets in Inset and Traditional Overlay.

HOW TO ORDER

- Specify **L** or **R** hinging on Single Door cabinet
- To calculate the height of the cabinet over the refrigerator, subtract overall height of the refrigerator, including its hinges, from the installation height. Common installation heights are 84", 90", and 96". For proper airflow, see refrigerator specifications.
- Pricing P-15-16

INSTALLATION TIP

Wall cabinets greater than 18" deep must be secured to soffit or ceiling OR supported by a full height, 24" deep end panel or utility cabinet, in which case, the other side must also be supported by a wall cabinet, minimum 12" deep.

NOTES/CAUTION

- 9" wide cabinets are not available in inset.

© Copyright StarMark Cabinetry MARCH 2021

Block 1080 Refrigerator Wall continued I

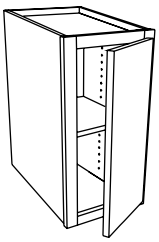

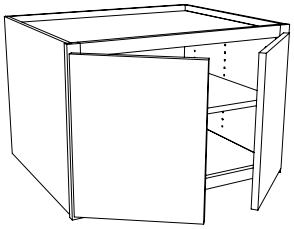

Butt Doors

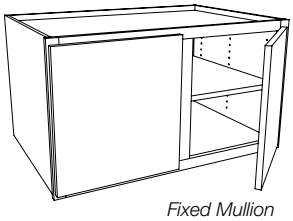

Fixed Mullion

Single Door	Butt Doors		Fixed Mullion	
RW0920	**2RW2420**	**2RW3920**	**RW3020**	**RW4520**
RW1220	**2RW2720**	**2RW4220**	**RW3320**	**RW4820**
RW1520	**2RW3020**		**RW3620**	
RW1820	**2RW3320**		**RW3720**	
RW2120	**2RW3620**		**RW3920**	
RW2420	**2RW3720**		**RW4220**	
RW0921	**2RW2421**	**2RW3921**	**RW3021**	**RW4521**
RW1221	**2RW2721**	**2RW4221**	**RW3321**	**RW4821**
RW1521	**2RW3021**		**RW3621**	
RW1821	**2RW3321**		**RW3721**	
RW2121	**2RW3621**		**RW3921**	
RW2421	**2RW3721**		**RW4221**	
RW0924	**2RW2424**	**2RW3924**	**RW3024**	**RW4524**
RW1224	**2RW2724**	**2RW4224**	**RW3324**	**RW4824**
RW1524	**2RW3024**		**RW3624**	
RW1824	**2RW3324**		**RW3724**	
RW2124	**2RW3624**		**RW3924**	
RW2424	**2RW3724**		**RW4224**	

DESIGN CONSIDERATIONS

24″ Deep

- 20″, 21″ and 24″ high cabinets have one adjustable shelf

HOW TO ORDER

- Specify **L** or **R** hinging on Single Door cabinet
- To calculate the height of the cabinet over the refrigerator, subtract overall height of the refrigerator, including its hinges, from the installation height. Common installation heights are 84″, 90″, and 96″. For proper airflow, see refrigerator specifications.
- Pricing P-17

INSTALLATION TIP

Wall cabinets greater than 18″ deep must be secured to soffit or ceiling OR supported by a full height, 24″ deep end panel or utility cabinet, in which case, the other side must also be supported by a wall cabinet, minimum 12″ deep.

NOTES/CAUTION I

- 9″ wide cabinets are not available in inset.

Block 1080 Refrigerator Wall continued I

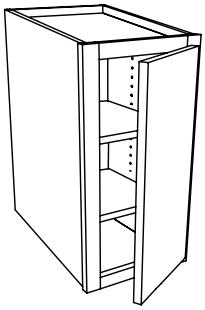

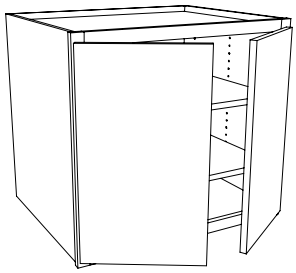

Butt Doors

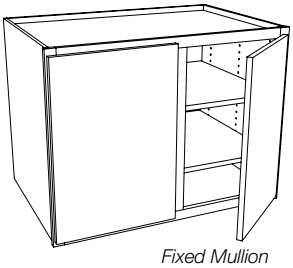

Fixed Mullion

Single Door	Butt Doors		Fixed Mullion	
RW0927	**2RW2427**	**2RW3927**	**RW3027**	**RW4527**
RW1227	**2RW2727**	**2RW4227**	**RW3327**	**RW4827**
RW1527	**2RW3027**		**RW3627**	
RW1827	**2RW3327**		**RW3727**	
RW2127	**2RW3627**		**RW3927**	
RW2427	**2RW3727**		**RW4227**	
RW0930	**2RW2430**	**2RW3930**	**RW3030**	**RW4530**
RW1230	**2RW2730**	**2RW4230**	**RW3330**	**RW4830**
RW1530	**2RW3030**		**RW3630**	
RW1830	**2RW3330**		**RW3730**	
RW2130	**2RW3630**		**RW3930**	
RW2430	**2RW3730**		**RW4230**	

DESIGN CONSIDERATIONS

24″ Deep

- 27″, 30″ high cabinets have two adjustable shelves

HOW TO ORDER

- Specify **L** or **R** hinging on Single Door cabinet
- To calculate the height of the cabinet over the refrigerator, subtract overall height of the refrigerator, including its hinges, from the installation height. Common installation heights are 84″, 90″, and 96″. For proper airflow, see refrigerator specifications.
- Pricing P-18

INSTALLATION TIP

Wall cabinets greater than 18″ deep must be secured to soffit or ceiling OR supported by a full height, 24″ deep end panel or utility cabinet, in which case, the other side must also be supported by a wall cabinet, minimum 12″ deep.

NOTES/CAUTION I

- 9″ wide cabinets are not available in inset.

© Copyright StarMark Cabinetry MARCH 2021

Block 1081 Refrigerator Wall with Tip Up Hinges

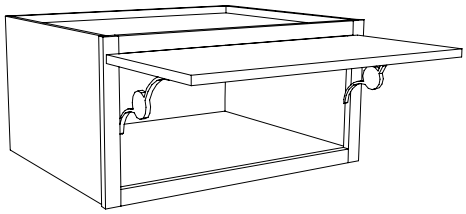

2RWTU2412	**2RWTU3012**	**2RWTU3612**
2RWTU2414	**2RWTU3014**	**2RWTU3614**
2RWTU2415	**2RWTU3015**	**2RWTU3615**
2RWTU2417	**2RWTU3017**	**2RWTU3617**
2RWTU2418	**2RWTU3018**	**2RWTU3618**
2RWTU2712	**2RWTU3312**	
2RWTU2714	**2RWTU3314**	
2RWTU2715	**2RWTU3315**	
2RWTU2717	**2RWTU3317**	
2RWTU2718	**2RWTU3318**	

DESIGN CONSIDERATIONS

12", 14", 15", 17", 18" High - 24" Deep

- No shelf
- Door opens vertically
- No reduce height modifications less than 10½"
- No reduce depth modifications less than 9" deep
- Arched door styles not available
- Mullion doors not available
- Doors are a single panel, with the exceptions of Laguna and Lancaster.
- Tempo doors are veneer on cabinets wider than 24".
- Soft close hinges are not available on this cabinet.

HOW TO ORDER

- Pricing P-19

Block 1085 Refrigerator Wall with Tray Dividers

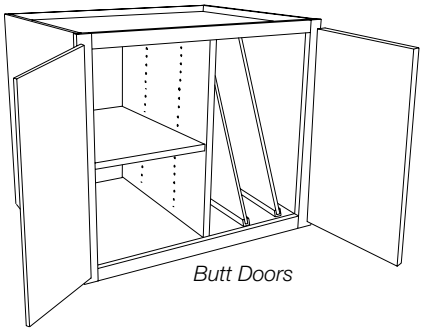

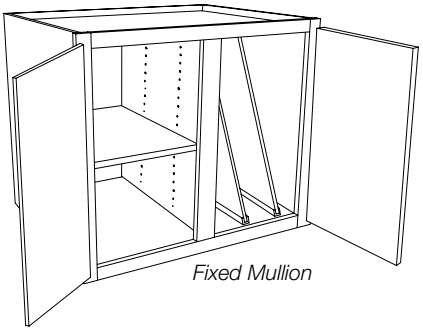

Butt Doors	Fixed Mullion	Fixed Mullion
2RWTD3018	**RWTD3018**	**RWTD3024**
2RWTD3318	**RWTD3318**	**RWTD3324**
2RWTD3618	**RWTD3618**	**RWTD3624**
2RWTD3718	**RWTD3718**	**RWTD3724**
2RWTD3918	**RWTD3918**	**RWTD3924**
2RWTD4218	**RWTD4218**	**RWTD4224**
	RWTD4518	**RWTD4524**
	RWTD4818	**RWTD4824**
2RWTD3021	**RWTD3021**	**RWTD3027**
2RWTD3321	**RWTD3321**	**RWTD3327**
2RWTD3621	**RWTD3621**	**RWTD3627**
2RWTD3721	**RWTD3721**	**RWTD3727**
2RWTD3921	**RWTD3921**	**RWTD3927**
2RWTD4221	**RWTD4221**	**RWTD4227**
	RWTD4521	**RWTD4527**
	RWTD4821	**RWTD4827**
2RWTD3024		**RWTD3030**
2RWTD3324		**RWTD3330**
2RWTD3624		**RWTD3630**
2RWTD3724		**RWTD3730**
2RWTD3924		**RWTD3930**
2RWTD4224		**RWTD4230**
		RWTD4530
		RWTD4830
2RWTD3027		
2RWTD3327		
2RWTD3627		
2RWTD3727		
2RWTD3927		
2RWTD4227		
2RWTD3030		
2RWTD3330		
2RWTD3630		
2RWTD3730		
2RWTD3930		
2RWTD4230		

DESIGN CONSIDERATIONS

18", 21", 24", 27", 30" High - 24" Deep

- ¾" thick vertical partition (WVP) installed in center of cabinet
- Tray dividers installed
- Adjustable shelves on left side of partition. See chart.

HOW TO ORDER

- To calculate the height of the cabinet over the refrigerator, subtract overall height of the refrigerator, including its hinges, from the installation height. Common installation heights are 84", 90", and 96". For proper airflow, see refrigerator specifications.
- Tray dividers are on the right unless your order specifies left.
- Pricing P-20

INSTALLATION TIP

Wall cabinets greater than 18" deep must be secured to soffit or ceiling OR supported by a full height, 24" deep end panel or utility cabinet, in which case, the other side must also be supported by a wall cabinet, minimum 12" deep.

Cabinet Width	Number of Tray Dividers
30"	1
33"	1
36"	2
37"	2
39"	2
42"	2
45"	2
48"	3

Cabinet Height	Number of Shelves
18"	no shelf
21", 24"	1 shelf
27", 30"	2 shelves

© Copyright StarMark Cabinetry MARCH 2021

Block 1102 Wall Pantry

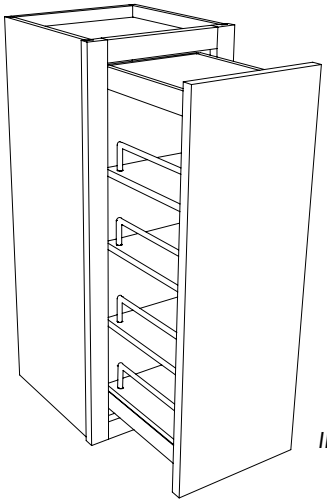

Illustration shows 30″ high cabinet

WPPTY0930
WPPTY1230
WPPTY0936
WPPTY1236

DESIGN CONSIDERATIONS

30″, 36″ High - 12″ Deep

- 30″ & 36″ high cabinets have 3 adjustable wood shelves and 1 fixed wood shelf.
- 36″ high cabinet has 1 additional fixed shelf storage at top with chrome wire sides
- No reduced height/depth/width modifications are allowed.
- Internal kit remains the same size, regardless of dimensional modification. When increasing the width, order with wide stiles to avoid side to side movement.
- Pull out pantry shelves are wood with chrome accents. They extend fully.
- Soft close hinges are not available on this cabinet.

HOW TO ORDER

- Pricing P-21

NOTES/CAUTION

- 9″ wide cabinets are not available in inset.
- Cabinet must be at least 12½″ deep for inset.

Block 1105 Wall Pull Down Pantry Single Shelf

NEW!

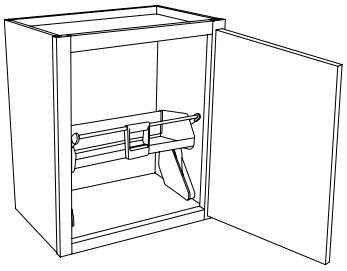

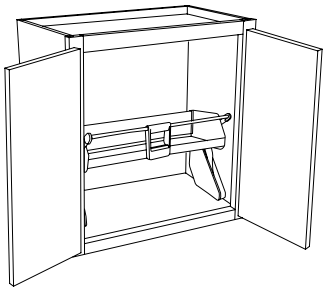

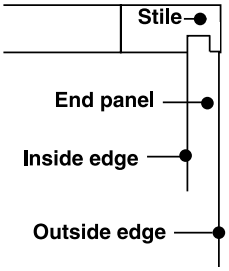

Single Door
WPDS2124
WPDS2424
WPDS2130
WPDS2430

Butt Doors
2WPDS2424
2WPDS2724
2WPDS3024
2WPDS3324
2WPDS3624
2WPDS2430
2WPDS2730
2WPDS3030
2WPDS3330
2WPDS3630

DESIGN CONSIDERATIONS

24″, 30″ High - 12″ Deep

- Pull down pantry unit with single shelf and handle
- End panels are not drilled for shelves. No shelves are included.
- End panels are shifted to outside frame edge, eliminating ¼″ reveal. End panel are not flush. See detail.
- No depth, width or reduced height modifications

HOW TO ORDER

- Pricing P-21

NOTES/CAUTION

- Inset concealed hinges not available.

© Copyright StarMark Cabinetry MARCH 2021

Block 1106 Wall Pull Down Pantry Double Shelf

NEW!

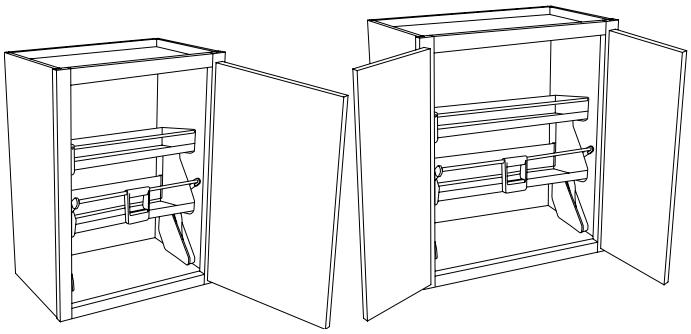

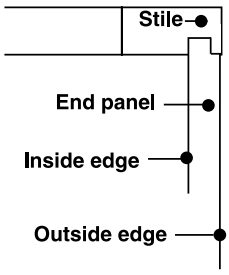

Single Door
WPDD2130
WPDD2430
WPDD2136
WPDD2436

Butt Doors
2WPDD2430
2WPDD2436

DESIGN CONSIDERATIONS

30", 36" High - 12" Deep

- Pull down pantry unit with double shelf and handle
- End panels are not drilled for shelves. No shelves are included.
- End panels are shifted to outside frame edge, eliminating ¼" reveal. End panel are not flush. See detail.
- No depth, width or reduced height modifications

HOW TO ORDER

- Pricing P-22

NOTES/CAUTION

- Inset concealed hinges not available.

Block 1110 Spice Shelf Wall

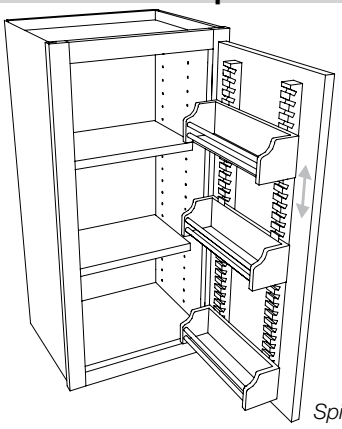

Spice racks adjust up and down.

SSW1530
SSW1830
SSW2130
SSW2430

SSW1533
SSW1833
SSW2133
SSW2433

SSW1536
SSW1836
SSW2136
SSW2436

SSW1539
SSW1839
SSW2139
SSW2439

SSW1542
SSW1842
SSW2142
SSW2442

DESIGN CONSIDERATIONS

30", 33", 36", 39", 42" High - 12" Deep

- Spice racks are 3" deep. Inside capacity is 2¼".
- Cabinet shelves are 7½" deep and adjustable.
- Spice storage racks are adjustable up and down

HOW TO ORDER

- Specify **L** or **R** hinging
- Pricing P-22

Cabinet Height	Number of shelves	Number of spice racks
30"	2	3
33"	2	3
36"	2	3
39"	3	4
42"	3	4

© Copyright StarMark Cabinetry MARCH 2021

Block 1115 Wall Cabinet with Tip Up Door

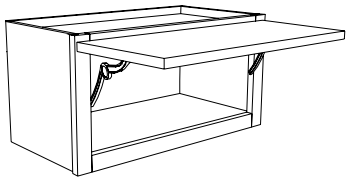

2W2412TU	**2W2415TU**	**2W2418TU**
2W2712TU	**2W2715TU**	**2W2718TU**
2W3012TU	**2W3015TU**	**2W3018TU**
2W3312TU	**2W3315TU**	**2W3318TU**
2W3612TU	**2W3615TU**	**2W3618TU**

DESIGN CONSIDERATIONS

12", 15", 18" High - 12" Deep

- No shelf
- Door opens vertically
- No reduce height modifications less than 10½"
- No reduce depth modifications less than 9" deep
- Arched door styles not available
- Mullion doors not available
- Doors are a single panel, with the exceptions of Laguna and Lancaster.
- Tempo doors are veneer with edge banding on all four edges on cabinets wider than 24". The grain direction is vertical.
- Aero and Monroe doors have horizontal grain on cabinets wider than 24".
- Soft close hinges are not available on this cabinet.

HOW TO ORDER

- Pricing P-23

Block 1120 Wall Cabinet with Bifold Door

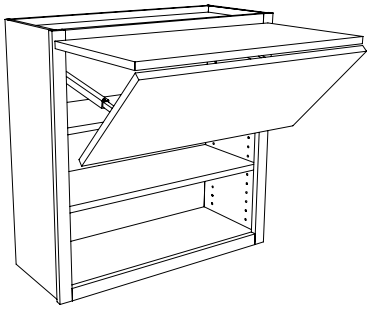

2W2424BF	**2W2430BF**	**2W2436BF**
2W2724BF	**2W2730BF**	**2W2736BF**
2W3024BF	**2W3030BF**	**2W3036BF**
2W3324BF	**2W3330BF**	**2W3336BF**
2W3624BF	**2W3630BF**	**2W3636BF**
2W2427BF	**2W2433BF**	
2W2727BF	**2W2733BF**	
2W3027BF	**2W3033BF**	
2W3327BF	**2W3333BF**	
2W3627BF	**2W3633BF**	

DESIGN CONSIDERATIONS

24", 27", 30", 33", 36" High - 12" Deep

- 24" high has 1 adjustable shelf
- 27", 30", 33" and 36" high have 2 adjustable shelves
- The top door is hinged to the cabinet and the bottom door is attached to the lift system. Both doors are attached together.
- The lift system effortlessly raises the doors and holds them open in any position.
- Optimal hardware position is near the lower edge so the pull can be easily reached when open.
- No height or reduce depth modifications
- Arched door styles not available
- Mullion doors not available
- Doors are a single panel, with the exceptions of Laguna and Lancaster.
- Tempo doors are veneer with edge banding on all four edges on cabinets wider than 24". The grain direction is vertical.
- Aero and Monroe doors have horizontal grain on cabinets wider than 24".
- Not recommended for installation next to a deeper wall cabinet with moulding. Clearance is restricted.
- Soft close hinges are not available on this cabinet.

HOW TO ORDER

- Pricing P-23

© Copyright StarMark Cabinetry MARCH 2021

STACKED WALL CABINETS

FOR BLOCKS
1130
1135
1136
1140
1145

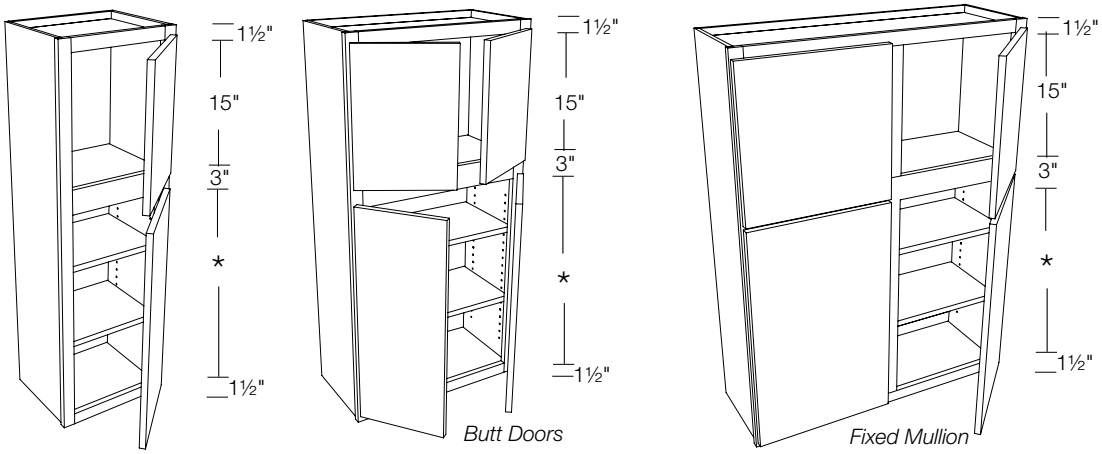

DESIGN CONSIDERATIONS

48", 51", 54", 57", 60", 63", 66" High - 12" Deep

- Upper area opening is 15" high for display or seasonal storage
- Adjustable shelves in lower opening. See chart.
- When an arched door style is specified only the top door is arched.
- When a Modern overlay door style is specified, the doors will have a ¼" space between the top and bottom door. The top door will align with 19" high wall cabinets.
- Mortise and tenon doors greater than 42" high will have a center rail.

HOW TO ORDER

- Specify **L** or **R** hinging on 15"-24" wide Single Door cabinets
- If upper section is for display, specify ID doors for the upper section. The entire cabinet will receive a Finished Veneer Interior (see block 9480 for information).
- Pricing P-24-25

Cabinet Height	Height of Lower Opening*	Number of Shelves
48"	27"	2
51"	30"	2
54"	33"	2
57"	36"	3
60"	39"	3
63"	42"	3
66"	45"	3

Block 1130 Stacked Wall Cabinet

48" High

Single Door	Butt Doors	Fixed Mullion
WSCK1548	**2WSCK2448**	**WSCK3948**
WSCK1848	**2WSCK2748**	**WSCK4248**
WSCK2148	**2WSCK3048**	
WSCK2448	**2WSCK3348**	
	2WSCK3648	
	2WSCK3948	
	2WSCK4248	

Block 1135 Stacked Wall Cabinet

51" High

Single Door	Butt Doors	Fixed Mullion
WSCK1551	**2WSCK2451**	**WSCK3951**
WSCK1851	**2WSCK2751**	**WSCK4251**
WSCK2151	**2WSCK3051**	
WSCK2451	**2WSCK3351**	
	2WSCK3651	
	2WSCK3951	
	2WSCK4251	

54" High

Single Door	Butt Doors	Fixed Mullion
WSCK1554	**2WSCK2454**	**WSCK3954**
WSCK1854	**2WSCK2754**	**WSCK4254**
WSCK2154	**2WSCK3054**	
WSCK2454	**2WSCK3354**	
	2WSCK3654	
	2WSCK3954	
	2WSCK4254	

Block 1136 Stacked Wall Cabinet

57" High

Single Door	Butt Doors	Fixed Mullion
WSCK1557	**2WSCK2457**	**WSCK3957**
WSCK1857	**2WSCK2757**	**WSCK4257**
WSCK2157	**2WSCK3057**	
WSCK2457	**2WSCK3357**	
	2WSCK3657	
	2WSCK3957	
	2WSCK4257	

© Copyright StarMark Cabinetry MARCH 2021

Block 1140 Stacked Wall Cabinet

I

60″ High

Single Door	Butt Doors	Fixed Mullion
WSCK1560	**2WSCK2460**	**WSCK3960**
WSCK1860	**2WSCK2760**	**WSCK4260**
WSCK2160	**2WSCK3060**	
WSCK2460	**2WSCK3360**	
	2WSCK3660	
	2WSCK3960	
	2WSCK4260	

Block 1145 Stacked Wall Cabinet

I

63″ High

Single Door	Butt Doors	Fixed Mullion
WSCK1563	**2WSCK2463**	**WSCK3963**
WSCK1863	**2WSCK2763**	**WSCK4263**
WSCK2163	**2WSCK3063**	
WSCK2463	**2WSCK3363**	
	2WSCK3663	
	2WSCK3963	
	2WSCK4263	

66″ High

Single Door	Butt Doors	Fixed Mullion
WSCK1566	**2WSCK2466**	**WSCK3966**
WSCK1866	**2WSCK2766**	**WSCK4266**
WSCK2166	**2WSCK3066**	
WSCK2466	**2WSCK3366**	
	2WSCK3666	
	2WSCK3966	
	2WSCK4266	

STACKED WALL CABINETS WITH OPEN SHELF BELOW

FOR BLOCKS
1152
1153
1154
1155
1157

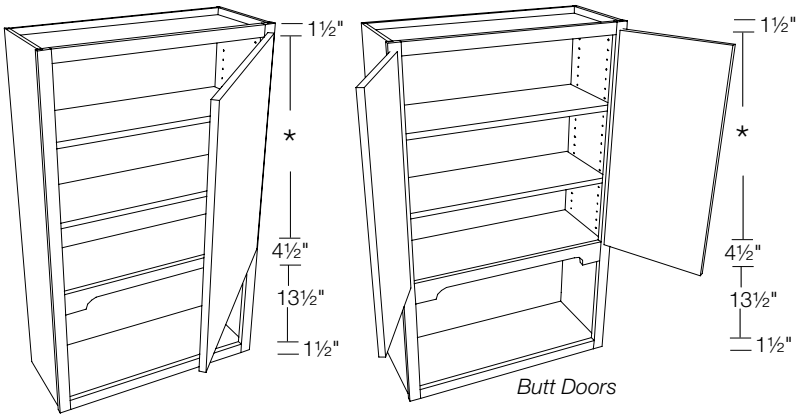

DESIGN CONSIDERATIONS

48″, 54″, 57″, 60″, 66″ High - 12″ Deep

- Lower area is 13½″ high at edge of valance for display
- Adjustable shelves. See chart.
- Arch valance is standard
- Finished veneer interior
- Ogee edge on lower frame opening
- Mortise and tenon doors greater than 42″ high will have a center rail.

HOW TO ORDER

- Specify **L** or **R** hinging on 15″-24″ wide Single Door cabinets
- Other valances are available. See block 9170 for Valance Top Rail options.
- Ogee edge on frame opening may be modified when certain valances are specified for top rail. See HelpZone for information.
- Pricing P-26-27

Cabinet Height	Height of Upper Opening	Number of Shelves
48″	27″	2
54″	33″	2
57″	36″	3
60″	39″	3
66″	45″	3

Block 1152 Stacked Wall Cabinet with Open Shelf Below

48″ High

Single Door	Butt Doors
WSKXR1548	**2WSKXR2448**
WSKXR1848	**2WSKXR2748**
WSKXR2148	**2WSKXR3048**
WSKXR2448	**2WSKXR3348**
	2WSKXR3648

© Copyright StarMark Cabinetry MARCH 2021

I available in Inset cabinetry

STACKED WALL CABINETS WITH OPEN SHELF BELOW

FOR BLOCKS
1152
1153
1154
1155
1157

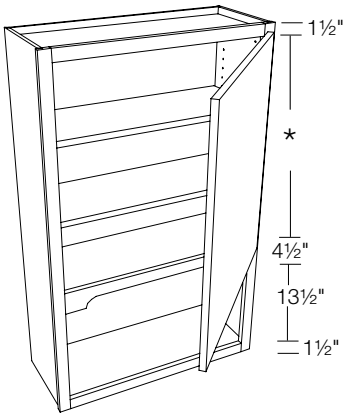

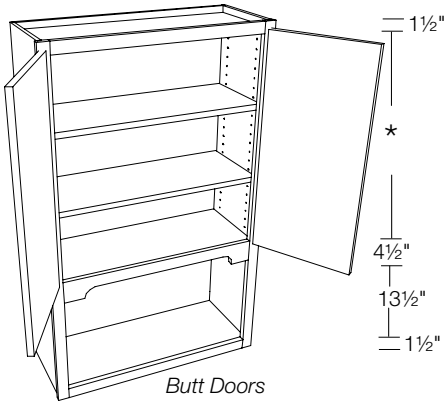

Butt Doors

DESIGN CONSIDERATIONS

48", 54", 57", 60", 66" High - 12" Deep

- Lower area is 13½" high at edge of valance for display
- Adjustable shelves. See chart.
- Arch valance is standard
- Finished veneer interior
- Ogee edge on lower frame opening
- Mortise and tenon doors greater than 42" high will have a center rail.

HOW TO ORDER

- Specify **L** or **R** hinging on 15"-24" wide Single Door cabinets
- Other valances are available. See block 9170 for Valance Top Rail options.
- Ogee edge on frame opening may be modified when certain valances are specified for top rail. See HelpZone for information.
- Pricing P-26-27

Cabinet Height	Height of Upper Opening	Number of Shelves
48"	27"	2
54"	33"	2
57"	36"	3
60"	39"	3
66"	45"	3

Block 1153 Stacked Wall Cabinet with Open Shelf Below

54" High

Single Door	Butt Doors
WSKXR1554	**2WSKXR2454**
WSKXR1854	**2WSKXR2754**
WSKXR2154	**2WSKXR3054**
WSKXR2454	**2WSKXR3354**
	2WSKXR3654

Block 1154 Stacked Wall Cabinet with Open Shelf Below

57" High

Single Door	Butt Doors
WSKXR1557	**2WSKXR2457**
WSKXR1857	**2WSKXR2757**
WSKXR2157	**2WSKXR3057**
WSKXR2457	**2WSKXR3357**
	2WSKXR3657

Block 1155 Stacked Wall Cabinet with Open Shelf Below

60" High

Single Door	Butt Doors
WSKXR1560	**2WSKXR2460**
WSKXR1860	**2WSKXR2760**
WSKXR2160	**2WSKXR3060**
WSKXR2460	**2WSKXR3360**
	2WSKXR3660

Block 1157 Stacked Wall Cabinet with Open Shelf Below

66" High

Single Door	Butt Doors
WSKXR1566	**2WSKXR2466**
WSKXR1866	**2WSKXR2766**
WSKXR2166	**2WSKXR3066**
WSKXR2466	**2WSKXR3366**
	2WSKXR3666

© Copyright StarMark Cabinetry MARCH 2021

Block 1158 Wall Stacked Tower Style A

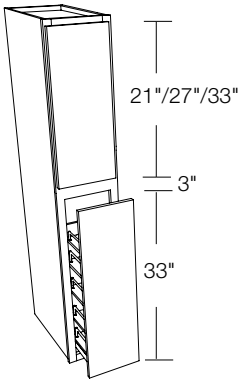

WSTA0960
WSTA0966
WSTA0972
WSTA1260
WSTA1266
WSTA1272

DESIGN CONSIDERATIONS

60", 66", 72" High – 21" Deep

- 18" and 24" depths are available at no extra charge
- 60" high has one adjustable shelf in the upper area
- 66", 72" high have two adjustable shelves in the upper area
- Pull-out shelves in lower tower are wood with chrome accents. They extend fully.
- Pull-out tower contains 2 fixed shelves and 3 adjustable shelves
- At all unit depths, pull-out shelves are 12" deep
- When arched door style is specified for order, arched door on top door only.
- Flush finished end panels are standard
- Soft close hinges are only available on upper door.

HOW TO ORDER

- Nomenclature indicates width by height.
- Specify depth
- Specify **L** or **R** hinging for top door
- Pricing P-27

NOTES/CAUTION

- 9" wide cabinets are not available in inset.

Block 1159 Wall Stacked Tower Style B

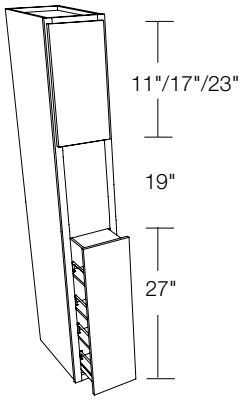

Corbel Pattern	Block #
Wright	13370
Mantel	7920
Any Art for Everyday corbel less than 4½" deep and less than 10" in height	15100

WSTB1260
WSTB1266
WSTB1272

DESIGN CONSIDERATIONS

60", 66", 72" High – 21" Deep

- 18" and 24" depths are available at no extra charge
- 66", 72" high have two adjustable shelves in the upper area
- Pull-out shelves in lower tower are wood with chrome accents. They extend fully.
- Pull-out tower contains 1 fixed shelf and 3 adjustable shelves
- At all unit depths, pull-out shelves are 12" deep
- Tower has flat area for mantel and corbel installation. See chart for blocks.
- When arched door style is specified for order, arched door on top door only.
- Flush finished end panels are standard
- Soft close hinges are only available on upper door.

HOW TO ORDER

- Nomenclature indicates width by height.
- Specify depth
- Specify **L** or **R** hinging for top door
- Pricing P-28

© Copyright StarMark Cabinetry MARCH 2021

SQUARE WALL BLIND CORNER

For blocks

1208 **1220**
1209 **1221**
1210 **1222**
1214
1215
1219

DESIGN CONSIDERATIONS

- Refer to block 9430 and 9440 for panel or flush void application.

	Traditional	Modern
Minimum pull for proper door function	1″	1″
Maximum pull for proper door function	3″	3″
Filler, extended stile or wide stile needed on adjacent cabinet for proper door function	0″	1″

HOW TO ORDER

- Allow extra pull for decorative hardware
- Opening size is 15″ less than overall width. Example: opening size of SW3330 is 18″.

Block 1208 Square Wall Blind Corner

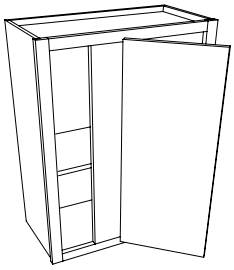

Illustration shows Void Left

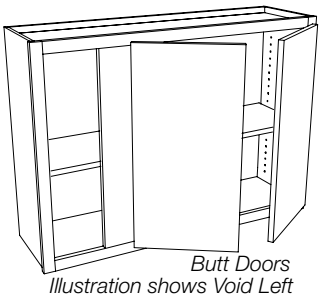

Butt Doors
Illustration shows Void Left

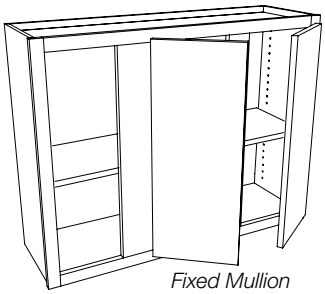

Fixed Mullion
Illustration shows Void Left

Single Door
Void Left
SW2424VL
SW2724VL
SW3024VL
SW3324VL
SW3624VL

Void Right
SW2424VR
SW2724VR
SW3024VR
SW3324VR
SW3624VR

Butt Doors
Void Left
2SW3924VL
2SW4224VL
2SW4824VL

Void Right
2SW3924VR
2SW4224VR
2SW4824VR

Fixed Mullion
Void Left
SW4224VL
SW4524VL
SW4824VL

Void Right
SW4224VR
SW4524VR
SW4824VR

DESIGN CONSIDERATIONS

24″ High - 12″ Deep

- 1 adjustable shelf

HOW TO ORDER

- Specify **L** or **R** hinging for Single Door cabinet
- Pricing P-28

© Copyright StarMark Cabinetry MARCH 2021

Block 1209 Square Wall Blind Corner

I

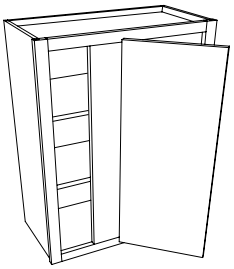

Illustration shows Void Left

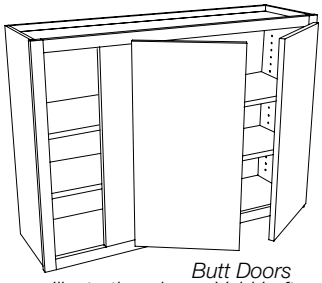

Butt Doors
Illustration shows Void Left

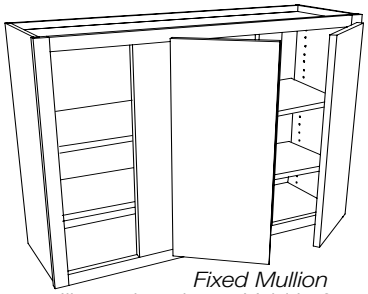

Fixed Mullion
Illustration shows Void Left

DESIGN CONSIDERATIONS
27" High - 12" Deep
- 2 adjustable shelves

HOW TO ORDER
- Specify **L** or **R** hinging for Single Door cabinet
- Pricing P-29

Single Door	Butt Doors	Fixed Mullion
Void Left	Void Left	Void Left
SW2427VL	**2SW3927VL**	**SW4227VL**
SW2727VL	**2SW4227VL**	**SW4527VL**
SW3027VL	**2SW4827VL**	**SW4827VL**
SW3327VL		
SW3627VL		
Void Right	Void Right	Void Right
SW2427VR	**2SW3927VR**	**SW4227VR**
SW2727VR	**2SW4227VR**	**SW4527VR**
SW3027VR	**2SW4827VR**	**SW4827VR**
SW3327VR		
SW3627VR		

Block 1210 Square Wall Blind Corner

I

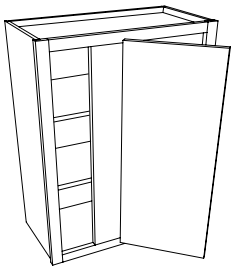

Illustration shows Void Left

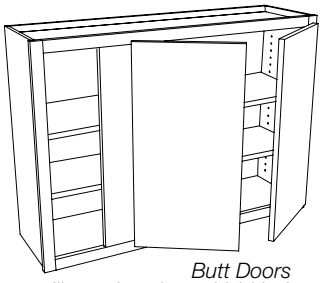

Butt Doors
Illustration shows Void Left

Fixed Mullion
Illustration shows Void Left

DESIGN CONSIDERATIONS
30" High - 12" Deep
- 2 adjustable shelves

HOW TO ORDER
- Specify **L** or **R** hinging for Single Door cabinet
- Pricing P-29

Single Door	Butt Doors	Fixed Mullion
Void Left	Void Left	Void Left
SW2430VL	**2SW3930VL**	**SW4230VL**
SW2730VL	**2SW4230VL**	**SW4530VL**
SW3030VL	**2SW4830VL**	**SW4830VL**
SW3330VL		
SW3630VL		
Void Right	Void Right	Void Right
SW2430VR	**2SW3930VR**	**SW4230VR**
SW2730VR	**2SW4230VR**	**SW4530VR**
SW3030VR	**2SW4830VR**	**SW4830VR**
SW3330VR		
SW3630VR		

© Copyright StarMark Cabinetry MARCH 2021

SQUARE WALL BLIND CORNER

For blocks

1208 **1220**
1209 **1221**
1210 **1222**
1214
1215
1219

DESIGN CONSIDERATIONS

- Refer to block 9430 and 9440 for panel or flush void application.

	Traditional	Modern
Minimum pull for proper door function	1″	1″
Maximum pull for proper door function	3″	3″
Filler, extended stile or wide stile needed on adjacent cabinet for proper door function	0″	1″

HOW TO ORDER

- Allow extra pull for decorative hardware
- Opening size is 15″ less than overall width. Example: opening size of SW3330 is 18″.

Block 1214 Square Wall Blind Corner

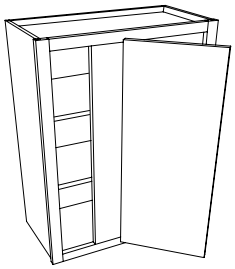

Illustration shows Void Left

Single Door
Void Left
SW2433VL
SW2733VL
SW3033VL
SW3333VL
SW3633VL

Void Right
SW2433VR
SW2733VR
SW3033VR
SW3333VR
SW3633VR

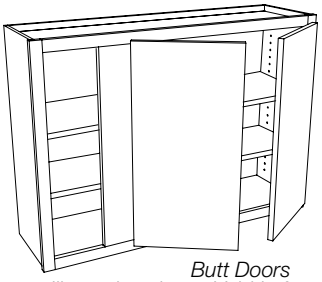

Butt Doors
Illustration shows Void Left

Butt Doors
Void Left
2SW3933VL
2SW4233VL
2SW4833VL

Void Right
2SW3933VR
2SW4233VR
2SW4833VR

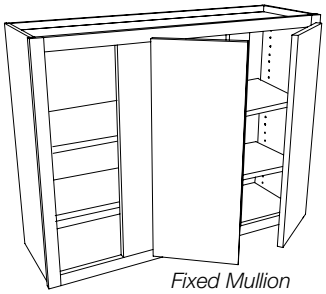

Fixed Mullion
Illustration shows Void Left

Fixed Mullion
Void Left
SW4233VL
SW4533VL
SW4833VL

Void Right
SW4233VR
SW4533VR
SW4833VR

DESIGN CONSIDERATIONS

33″ High - 12″ Deep

- 2 adjustable shelves

HOW TO ORDER

- Specify **L** or **R** hinging for Single Door cabinet
- Pricing P-30

Block 1215 Square Wall Blind Corner

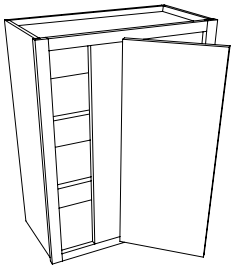

Illustration shows Void Left

Single Door
Void Left
SW2436VL
SW2736VL
SW3036VL
SW3336VL
SW3636VL

Void Right
SW2436VR
SW2736VR
SW3036VR
SW3336VR
SW3636VR

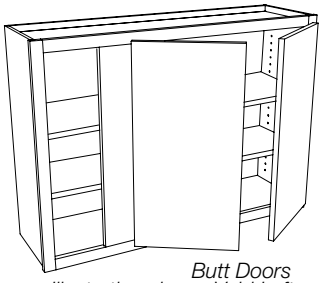

Butt Doors
Illustration shows Void Left

Butt Doors
Void Left
2SW3936VL
2SW4236VL
2SW4836VL

Void Right
2SW3936VR
2SW4236VR
2SW4836VR

Fixed Mullion
Illustration shows Void Left

Fixed Mullion
Void Left
SW4236VL
SW4536VL
SW4836VL

Void Right
SW4236VR
SW4536VR
SW4836VR

DESIGN CONSIDERATIONS

36″ High - 12″ Deep

- 2 adjustable shelves

HOW TO ORDER

- Specify **L** or **R** hinging for Single Door cabinet
- Pricing P-30

© Copyright StarMark Cabinetry MARCH 2021

Block 1219 Square Wall Blind Corner

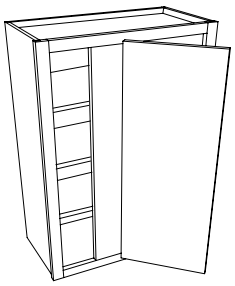

Illustration shows Void Left

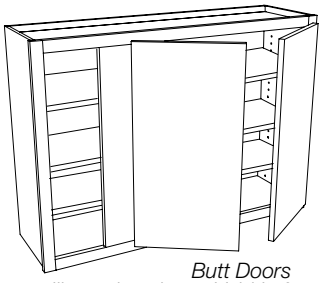

Butt Doors
Illustration shows Void Left

Fixed Mullion
Illustration shows Void Left

DESIGN CONSIDERATIONS

39" High - 12" Deep

- 3 adjustable shelves

HOW TO ORDER

- Specify **L** or **R** hinging for Single Door cabinet
- Pricing P-31

Single Door	Butt Doors	Fixed Mullion
Void Left	Void Left	Void Left
SW2439VL	**2SW3939VL**	**SW4239VL**
SW2739VL	**2SW4239VL**	**SW4539VL**
SW3039VL	**2SW4839VL**	**SW4839VL**
SW3339VL		
SW3639VL		
Void Right	Void Right	Void Right
SW2439VR	**2SW3939VR**	**SW4239VR**
SW2739VR	**2SW4239VR**	**SW4539VR**
SW3039VR	**2SW4839VR**	**SW4839VR**
SW3339VR		
SW3639VR		

Block 1220 Square Wall Blind Corner

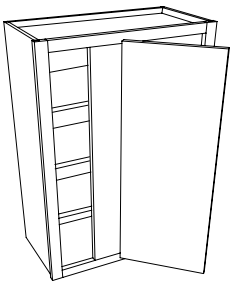

Illustration shows Void Left

Butt Doors
Illustration shows Void Left

Fixed Mullion
Illustration shows Void Left

DESIGN CONSIDERATIONS

42" High - 12" Deep

- 3 adjustable shelves
- Mortise and tenon doors greater than 42" high will have a center rail.

HOW TO ORDER

- Specify **L** or **R** hinging for Single Door cabinet
- Pricing P-31

Single Door	Butt Doors	Fixed Mullion
Void Left	Void Left	Void Left
SW2442VL	**2SW3942VL**	**SW4242VL**
SW2742VL	**2SW4242VL**	**SW4542VL**
SW3042VL	**2SW4842VL**	**SW4842VL**
SW3342VL		
SW3642VL		
Void Right	Void Right	Void Right
SW2442VR	**2SW3942VR**	**SW4242VR**
SW2742VR	**2SW4242VR**	**SW4542VR**
SW3042VR	**2SW4842VR**	**SW4842VR**
SW3342VR		
SW3642VR		

© Copyright StarMark Cabinetry MARCH 2021

SQUARE WALL BLIND CORNER

For blocks

1208 **1220**
1209 **1221**
1210 **1222**
1214
1215
1219

DESIGN CONSIDERATIONS

- Refer to block 9430 and 9440 for panel or flush void application.

	Traditional	Modern
Minimum pull for proper door function	1″	1″
Maximum pull for proper door function	3″	3″
Filler, extended stile or wide stile needed on adjacent cabinet for proper door function	0″	1″

HOW TO ORDER

- Allow extra pull for decorative hardware
- Opening size is 15″ less than overall width. Example: opening size of SW3330 is 18″.

Block 1221 Square Wall Blind Corner

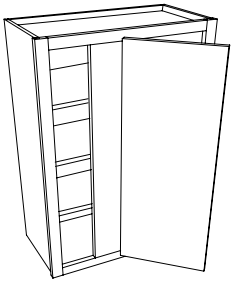

Illustration shows Void Left

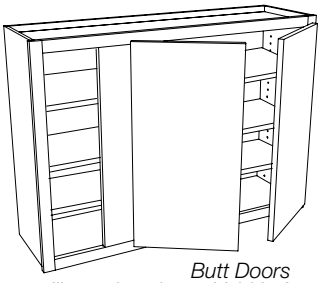

Butt Doors
Illustration shows Void Left

Fixed Mullion
Illustration shows Void Left

Single Door
Void Left
SW2445VL
SW2745VL
SW3045VL
SW3345VL
SW3645VL

Void Right
SW2445VR
SW2745VR
SW3045VR
SW3345VR
SW3645VR

Butt Doors
Void Left
2SW3945VL
2SW4245VL
2SW4845VL

Void Right
2SW3945VR
2SW4245VR
2SW4845VR

Fixed Mullion
Void Left
SW4245VL
SW4545VL
SW4845VL

Void Right
SW4245VR
SW4545VR
SW4845VR

DESIGN CONSIDERATIONS

45″ High - 12″ Deep

- 3 adjustable shelves
- Mortise and tenon doors greater than 42″ high will have a center rail.

HOW TO ORDER

- Specify **L** or **R** hinging for Single Door cabinet
- Pricing P-32

© Copyright StarMark Cabinetry **MARCH 2021**

Block 1222 Square Wall Blind Corner

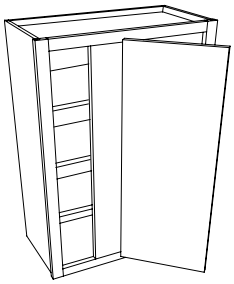

Illustration shows Void Left

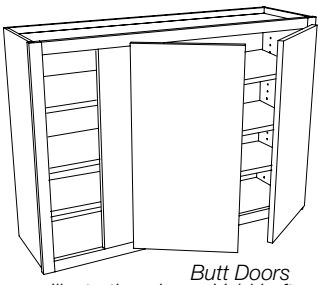

Butt Doors
Illustration shows Void Left

Fixed Mullion
Illustration shows Void Left

Single Door
Void Left
SW2448VL
SW2748VL
SW3048VL
SW3348VL
SW3648VL

Void Right
SW2448VR
SW2748VR
SW3048VR
SW3348VR
SW3648VR

Butt Doors
Void Left
2SW3948VL
2SW4248VL
2SW4848VL

Void Right
2SW3948VR
2SW4248VR
2SW4848VR

Fixed Mullion
Void Left
SW4248VL
SW4548VL
SW4848VL

Void Right
SW4248VR
SW4548VR
SW4848VR

DESIGN CONSIDERATIONS

48″ High - 12″ Deep

- 3 adjustable shelves
- Mortise and tenon doors greater than 42″ high will have a center rail.

HOW TO ORDER

- Specify **L** or **R** hinging for Single Door cabinet
- Pricing P-32

Block 1400 Square Corner Wall

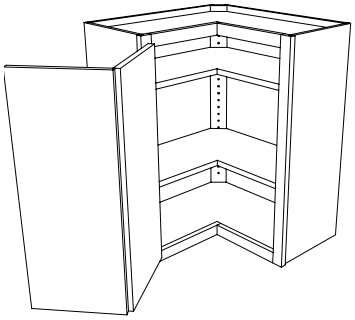

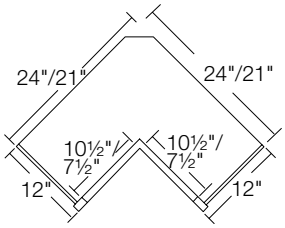

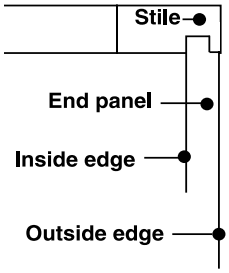

SCW2124
SCW2424

SCW2127
SCW2427

SCW2130
SCW2430

SCW2133
SCW2433

SCW2136
SCW2436

SCW2139
SCW2439

SCW2142
SCW2442

SCW2145
SCW2445

SCW2148
SCW2448

DESIGN CONSIDERATIONS

24″, 27″, 30″, 33″, 36″, 39″, 42″, 45″, 48″ High - 12″ Deep

- If you are specifying the Arlington, Bell Gardens, Ellington, Glendale, Peabody, Prescott, Redcliff, Syracuse, Venice or Verona door style, note that SCW21__ will be constructed with a flat panel door.
- If you are specifying the Melbourne door style, note that SCW21__ will be built with 2¼″ stiles to maintain the raised center panel.
- End panels are shifted to outside frame edge, eliminating ¼″ reveal. End panels are not flush. See detail.
- Soft close hinges are not available on this cabinet.
- Mortise and tenon doors greater than 42″ high will have a center rail.
- Doors modified to 1⅞″ stiles not recommended with Insert or Mullion door modification on this cabinet.
- If you are specifying a Traditional overlay door style, note that the doors on the SCW21__ will be constructed with 1⅞″ stiles.

HOW TO ORDER

- Specify **L** or **R** hinging
- Pricing P-33

Cabinet Height	Number of Shelves
24″	1
27″, 30″, 33″, 36″	2
39″, 42″, 45″, 48″	3

© Copyright StarMark Cabinetry MARCH 2021

Block 1405 Asymmetrical Square Wall

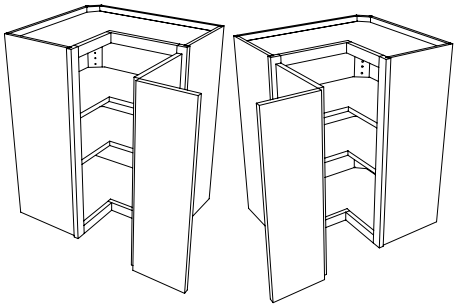

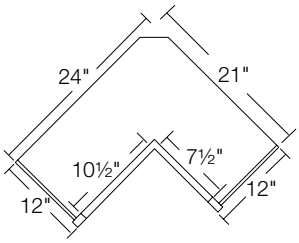

ASCW2421__ shown

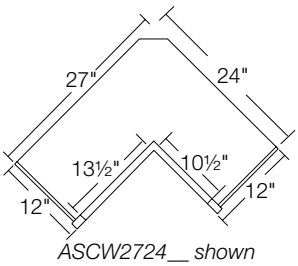

ASCW2724__ shown

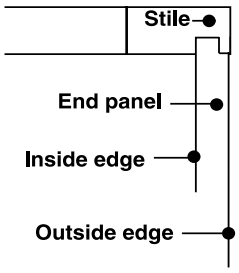

DESIGN CONSIDERATIONS

24", 27", 30", 33", 36", 39", 42", 45", 48" High - 12" Deep

- If you are specifying the Arlington, Bell Gardens, Ellington, Glendale, Peabody, Prescott, Redcliff, Syracuse, Venice or Verona door style, note that ASCW21__ will be constructed with a flat panel door.
- If you are specifying the Melbourne door style, note that ASCW21__ will be built with 2¼" stiles to maintain the raised center panel.
- If you are specifying a Traditional overlay door style, note that the smaller door will be built with 1⅞" stiles.
- Nomenclature reads: first set of numbers is left width, second set is right width and last set of numbers is height. For example: ASCW272424 is 27" wide on the left side, 24" wide on the right side and 24" in height.
- End panels are shifted to outside frame edge, eliminating ¼" reveal. End panels are not flush. See detail.
- Soft close hinges are not available on this cabinet.
- Mortise and tenon doors greater than 42" high will have a center rail.
- Doors modified to 1⅞" stiles not recommended with Insert or Mullion door modification on this cabinet.

HOW TO ORDER

- Specify **L** or **R** hinging
- Pricing P-34

Cabinet Height	Number of Shelves
24"	1
27", 30", 33", 36"	2
39", 42", 45", 48"	3

ASCW212424	**ASCW212433**	**ASCW212442**
ASCW242124	**ASCW242133**	**ASCW242142**
ASCW272424	**ASCW272433**	**ASCW272442**
ASCW242724	**ASCW242733**	**ASCW242742**
ASCW212427	**ASCW212436**	**ASCW212445**
ASCW242127	**ASCW242136**	**ASCW242145**
ASCW272427	**ASCW272436**	**ASCW272445**
ASCW242727	**ASCW242736**	**ASCW242745**
ASCW212430	**ASCW212439**	**ASCW212448**
ASCW242130	**ASCW242139**	**ASCW242148**
ASCW272430	**ASCW272439**	**ASCW272448**
ASCW242730	**ASCW242739**	**ASCW242748**
SCWD2430	**SCWD2442**	
SCWD2433	**SCWD2445**	
SCWD2436	**SCWD2448**	
SCWD2439		

© Copyright StarMark Cabinetry MARCH 2021

Block 1412 Stacked Square Corner Wall

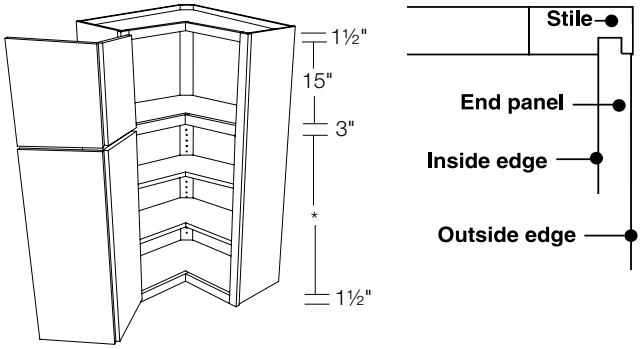

SCWSCK2445	**SCWSCK2457**
SCWSCK2448	**SCWSCK2460**
SCWSCK2451	**SCWSCK2463**
SCWSCK2454	**SCWSCK2466**

DESIGN CONSIDERATIONS

45", 48", 51", 54", 57", 60", 63", 66" High - 12" Deep

- Upper area is 15" high for display or seasonal storage
- Adjustable shelves in lower opening. See chart.
- When arched door style is specified for order, arch doors on top door only
- End panels are shifted to outside frame edge, eliminating ¼" reveal. End panels are not flush. See detail.
- When a Modern overlay door style is specified, the doors will have a ¼" space between the top and bottom door. The top door will not align with cabinets stacked on job site or stand alone 18" high wall cabinets.
- Mortise and tenon doors greater than 42" high will have a center rail.
- Doors modified to 1⅞" stiles not recommended with Insert or Mullion door modification on this cabinet.

HOW TO ORDER

- Specify **L** or **R** hinging
- If upper section is for display, specify ID doors for the upper section. The entire cabinet will receive a Finished Veneer Interior (see block 9480 for information).
- Pricing P-35

Cabinet Height	Height of lower opening	Number of Shelves
45"	24"	2
48"	27"	2
51"	30"	2
54"	33"	2
57"	36"	3
60"	39"	3
63"	42"	3
66"	45"	3

Block 1415 Square Corner Wall with Appliance Door

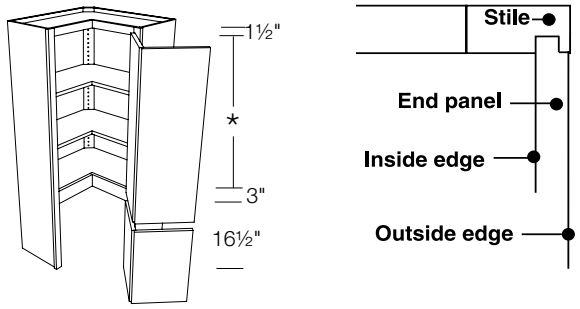

SCWDR2445	**SCWDR2457**
SCWDR2448	**SCWDR2460**
SCWDR2451	**SCWDR2463**
SCWDR2454	**SCWDR2466**

DESIGN CONSIDERATIONS

45", 48", 51", 54", 57", 60", 63", 66" High - 12" Deep

- When arched door style is specified for order, arch doors on top door only
- End panels are shifted to outside frame edge, eliminating ¼" reveal. End panels are not flush. See detail.
- No cabinet back in lower appliance area for access to wall outlets.
- Soft close hinges are not available on this cabinet.
- Mortise and tenon doors greater than 42" high will have a center rail.
- Doors modified to 1⅞" stiles not recommended with Insert or Mullion door modification on this cabinet.

HOW TO ORDER

- Specify **L** or **R** hinging
- Pricing P-35

Cabinet Height	Opening of top door	Number of Shelves
45"	24"	2
48"	27"	2
51"	30"	2
54"	33"	2
57"	36"	3
60"	39"	3
63"	42"	3
66"	45"	3

INSTALLATION TIP

Bottom door swing may be restricted by countertops with no-drip edge or bull nose tile.

© Copyright StarMark Cabinetry MARCH 2021

DIAGONAL WALL/DEEP DIAGONAL WALL/PENINSULA DIAGONAL WALL

Dimensions apply for blocks 1500, 1506, 1508, 1509, 1511, 1516, 1517, 1520, 1522, 1525, 1531, 1532, 1534, 1535, 1536, 1556

DW
DWCWL
DWCWLT
DWL
DWT
DWWLDR
DWSCK
DWDR
DW3D
DWLW
DLWDR
DWLW3D
DWLWT
DWDRLU
DLWDLU
DWLDRU

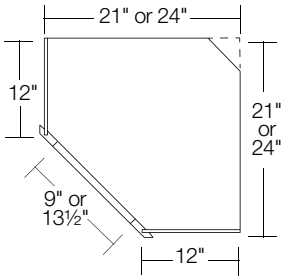

Dimensions apply for blocks 1505, 1507, 1510, 1515,1518, 1519, 1523, 1538

DDW
DDWDR
DDWT
DDW3D
DDWLW
DDWLD
DDWDLU
DDWLDU

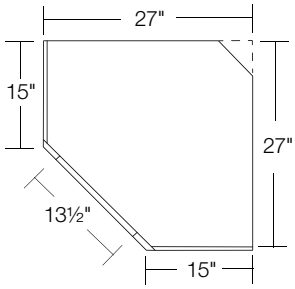

Block 1500 Diagonal Wall

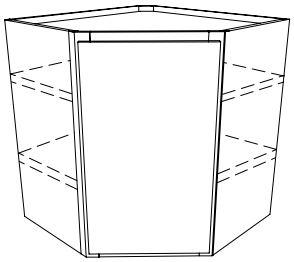

DW2112
DW2412

DW2115
DW2415

DW2118
DW2418

DW2121
DW2421

DW2124
DW2424

DW2127
DW2427

DW2130
DW2430

DW2133
DW2433

DW2136
DW2436

DW2139
DW2439

DW2142
DW2442

DW2145
DW2445

DW2148
DW2448

DESIGN CONSIDERATIONS

12", 15", 18", 21", 24", 27", 30", 33", 36", 39", 42", 45", 48" High - 12" Deep

- 21" wide cabinet will not accept decorative glass in door
- Mortise and tenon doors greater than 42" high will have a center rail.
- Modern overlay doors are automatically reduced in width for clearance when installed next to other cabinets with doors.

HOW TO ORDER

- Specify **L** or **R** hinging
- Pricing P-36

Cabinet Height	Number of Shelves
12", 15", 18""	0
21, 24"	1
27", 30", 33", 36"	2
39", 42", 45", 48"	3

Block 1505 Deep Diagonal Wall

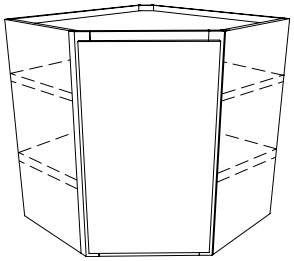

DDW2724

DDW2727

DDW2730

DDW2733

DDW2736

DDW2739

DDW2742

DDW2745

DDW2748

DESIGN CONSIDERATIONS

24", 27", 30", 33", 36", 39", 42", 45", 48" High - 15" Deep

- Not designed to be installed next to other 15" deep cabinets.
- Flush finished end panels are standard.
- Mortise and tenon doors greater than 42" high will have a center rail.

HOW TO ORDER

- Specify **L** or **R** hinging
- Pricing P-36

Cabinet Height	Number of Shelves
24"	1
27", 30", 33", 36"	2
39", 42", 45", 48"	3

© Copyright StarMark Cabinetry MARCH 2021

DIAGONAL WALL/DEEP DIAGONAL WALL/PENINSULA DIAGONAL WALL

Dimensions apply for blocks 1500, 1506, 1508, 1509, 1511, 1516, 1517, 1520, 1522, 1525, 1531, 1532, 1534, 1535, 1536, 1556

DW
DWCWL
DWCWLT
DWL
DWT
DWWLDR
DWSCK
DWDR
DW3D
DWLW
DLWDR
DWLW3D
DWLWT
DWDRLU
DLWDLU
DWLDRU

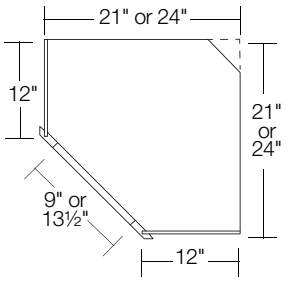

Dimensions apply for blocks 1505, 1507, 1510, 1515,1518, 1519, 1523, 1538

DDW
DDWDR
DDWT
DDW3D
DDWLW
DDWLD
DDWDLU
DDWLDU

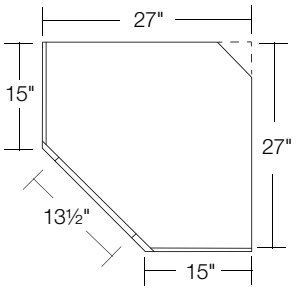

Block 1506 Diagonal Wall with Lift Up Door

I

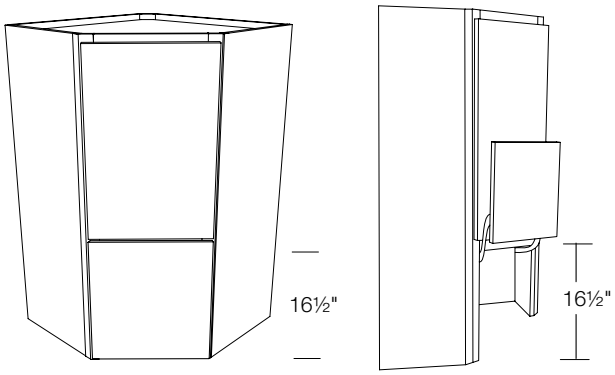

DWDRLU2445
DWDRLU2448
DWDRLU2451
DWDRLU2454
DWDRLU2457
DWDRLU2460
DWDRLU2463
DWDRLU2466

DESIGN CONSIDERATIONS

45", 48", 51", 54", 57", 60", 63", 66" High - 12" Deep

- No bottom frame rail in lower opening
- Opening clearance of lift up mechanism is 15"
- Lift system raises the door, holds it open and includes soft close
- When arched door style is specified on order, arch door on top door only
- Mullion doors not available on lower door
- Modern overlay doors are automatically reduced in width for clearance when installed next to other cabinets with doors.
- No cabinet back in lower appliance area for access to wall outlets
- Mortise and tenon doors greater than 42" high will have a center rail.
- In the open position, the door extends past the face frame approximately 9¼".

HOW TO ORDER

- Specify **L** or **R** hinging
- Pricing P-37

Cabinet Height	Opening of top door	Number of Shelves
45"	24"	2
48"	27"	2
51"	30"	2
54"	33"	2
57"	36"	3
60"	39"	3
63"	42"	3
66"	45"	3

© Copyright StarMark Cabinetry MARCH 2021

Block 1507 Deep Diagonal Wall with Lift Up Door

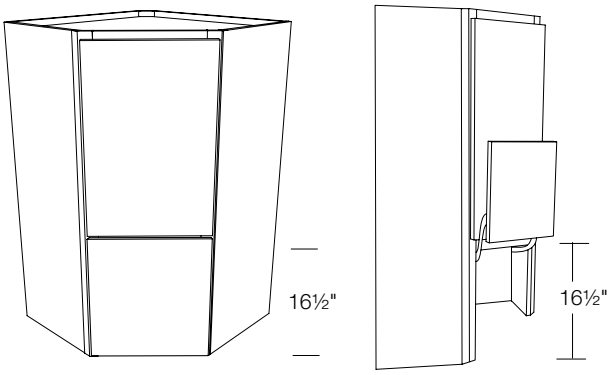

DDWDLU2745 **DDWDLU2757**

DDWDLU2748 **DDWDLU2760**

DDWDLU2751 **DDWDLU2763**

DDWDLU2754 **DDWDLU2766**

DESIGN CONSIDERATIONS

45", 48", 51", 54", 57", 60", 63", 66" High - 15" Deep

- Not designed to be installed next to other 15" deep cabinets.
- No bottom frame rail in lower opening
- Opening clearance of lift up mechanism is 15"
- Lift system raises the door, holds it open and includes soft close
- When arched door style is specified on order, arch door on top door only
- Mullion doors not available on lower door
- No cabinet back in lower appliance area for access to wall outlets
- Mortise and tenon doors greater than 42" high will have a center rail.
- In the open position, the door extends past the face frame approximately 9¼".
- Flush Finished End Panels are standard.

HOW TO ORDER

- Specify **L** or **R** hinging
- Pricing P-37

Cabinet Height	Opening of top door	Number of Shelves
45"	24"	2
48"	27"	2
51"	30"	2
54"	33"	2
57"	36"	3
60"	39"	3
63"	42"	3
66"	45"	3

Block 1508 Diagonal Wall with Wood Trays and Lift Up Door

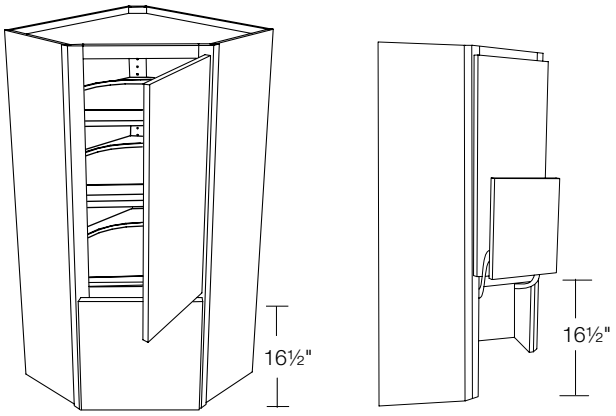

DLWDLU2445 **DLWDLU2454**

DLWDLU2448 **DLWDLU2457**

DLWDLU2451 **DLWDLU2460**

DESIGN CONSIDERATIONS

45", 48", 51", 54", 57", 60" High - 12" Deep

- 20" "D" shaped wood turntables on adjustable shelves and one on floor of cabinet
- No bottom frame rail in lower opening
- Opening clearance of lift up mechanism is 15"
- Lift system raises the door, holds it open and includes soft close
- When arched door style is specified on order, arch door on top door only
- Mullion doors not available on lower door
- Modern overlay doors are automatically reduced in width for clearance when installed next to other cabinets with doors.
- No cabinet back in lower appliance area for access to wall outlets
- Mortise and tenon doors greater than 42" high will have a center rail.
- In the open position, the door extends past the face frame approximately 9¼".

HOW TO ORDER

- Specify **L** or **R** hinging
- Pricing P-37

Cabinet Height	Opening of top door	Number of Shelves
45"	24"	2
48"	27"	2
51"	30"	2
54"	33"	2
57"	36"	3
60"	39"	3

© Copyright StarMark Cabinetry MARCH 2021

DIAGONAL WALL/DEEP DIAGONAL WALL/PENINSULA DIAGONAL WALL

Dimensions apply for blocks 1500, 1506, 1508, 1509, 1511, 1516, 1517, 1520, 1522, 1525, 1531, 1532, 1534, 1535, 1536, 1556

DW
DWCWL
DWCWLT
DWL
DWT
DWWLDR
DWSCK
DWDR
DW3D
DWLW
DLWDR
DWLW3D
DWLWT
DWDRLU
DLWDLU
DWLDRU

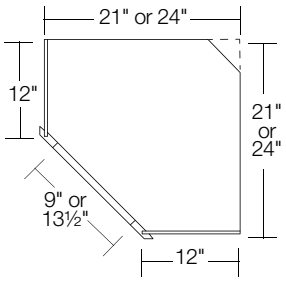

Dimensions apply for blocks 1505, 1507, 1510, 1515,1518, 1519, 1523, 1538

DDW
DDWDR
DDWT
DDW3D
DDWLW
DDWLD
DDWDLU
DDWLDU

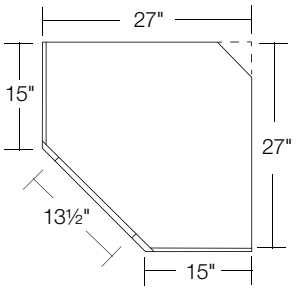

Block 1509 Diagonal Wall with Chrome/Wood Lazy Susan and Lift Up Door

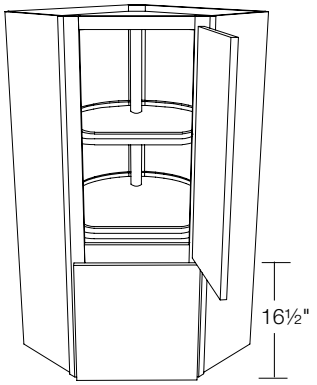

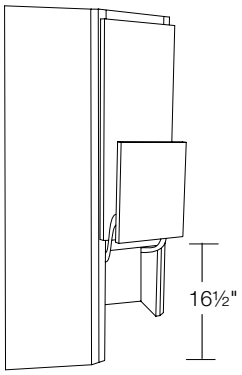

DWLDRU2448

DWLDRU2454

DWLDRU2460

DESIGN CONSIDERATIONS

48", 54", 60" High - 12" Deep

- Pole is placed on the back of the turntables for optimal storage
- 20" "D" shaped wood turntables have chrome railings and non-skid surface
- No bottom frame rail in lower opening
- Opening clearance of lift up mechanism is 15"
- Lift system raises the door, holds it open and includes soft close
- When arched door style is specified on order, arch door on top door only
- Mullion doors not available on lower door
- Modern overlay doors are automatically reduced in width for clearance when installed next to other cabinets with doors.
- No cabinet back in lower appliance area for access to wall outlets
- Mortise and tenon doors greater than 42" high will have a center rail.
- In the open position, the door extends past the face frame approximately 9¼".

HOW TO ORDER

- Specify **L** or **R** hinging
- Pricing P-38

Cabinet Height	Opening of top door	Number of Shelves
48"	27"	2
54"	33"	2
60"	39"	3

NOTES/CAUTION

- Inset concealed hinges not available.

© Copyright StarMark Cabinetry MARCH 2021

Block 1510 Deep Diagonal Wall with Wood Trays and Lift Up Door

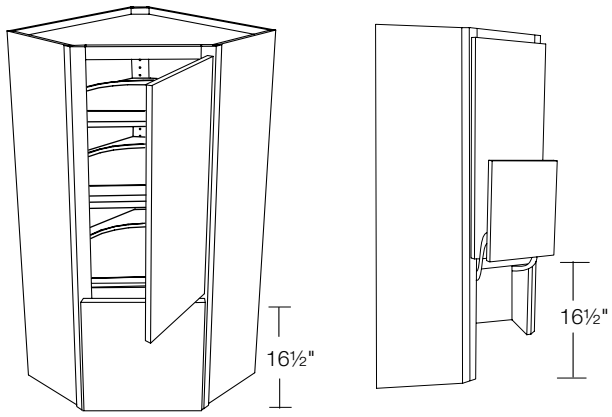

DDWLDU2745 **DDWLDU2754**

DDWLDU2748 **DDWLDU2757**

DDWLDU2751 **DDWLDU2760**

DESIGN CONSIDERATIONS

45", 48", 51", 54", 57", 60" High - 15" Deep

- Not designed to be installed next to other 15" deep cabinets.
- 20" "D" shaped wood turntables on adjustable shelves and one on floor of cabinet
- No bottom frame rail in lower opening
- Opening clearance of lift up mechanism is 15"
- Lift system raises the door, holds it open and includes soft close
- When arched door style is specified on order, arch door on top door only
- Mullion doors not available on lower door
- No cabinet back in lower appliance area for access to wall outlets
- Mortise and tenon doors greater than 42" high will have a center rail.
- In the open position, the door extends past the face frame approximately 9¼".
- Flush Finished End Panels are standard.

HOW TO ORDER

- Specify **L** or **R** hinging
- Pricing P-38

Cabinet Height	Opening of top door	Number of Shelves
45"	24"	2
48"	27"	2
51"	30"	2
54"	33"	2
57"	36"	3
60"	39"	3

Block 1511 Diagonal Wall with Tambour

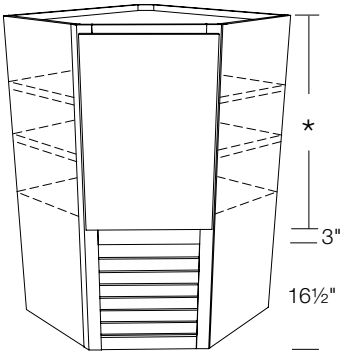

DWT2445 **DWT2457**

DWT2448 **DWT2460**

DWT2451 **DWT2463**

DWT2454 **DWT2466**

DESIGN CONSIDERATIONS

45", 48", 51", 54", 57", 60", 63", 66" High - 12" Deep

- Available in Alder, Cherry, Hickory, Maple, Oak and Walnut
- Wood tambour is 16½" high
- Clearance of open tambour is 14"
- No cabinet back in lower appliance area for access to wall outlets.
- Mortise and tenon doors greater than 42" high will have a center rail.
- Modern overlay doors are automatically reduced in width for clearance when installed next to other cabinets with doors.

HOW TO ORDER

- Specify **L** or **R** hinging
- Pricing P-38

Cabinet Height	Opening of top door	Number of Shelves
45"	24"	2
48"	27"	2
51"	30"	2
54"	33"	2
57"	36"	3
60"	39"	3
63"	42"	3
66"	45"	3

© Copyright StarMark Cabinetry MARCH 2021

DIAGONAL WALL/DEEP DIAGONAL WALL/PENINSULA DIAGONAL WALL

Dimensions apply for blocks 1500, 1506, 1508, 1509, 1511, 1516, 1517, 1520, 1522, 1525, 1531, 1532, 1534, 1535, 1536, 1556

DW
DWCWL
DWCWLT
DWL
DWT
DWWLDR
DWSCK
DWDR
DW3D
DWLW
DLWDR
DWLW3D
DWLWT
DWDRLU
DLWDLU
DWLDRU

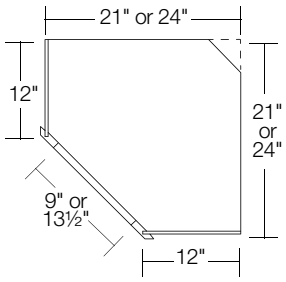

Dimensions apply for blocks 1505, 1507, 1510, 1515,1518, 1519, 1523, 1538

DDW
DDWDR
DDWT
DDW3D
DDWLW
DDWLD
DDWDLU
DDWLDU

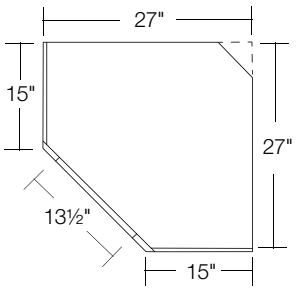

Block 1515 Deep Diagonal Wall with Tambour

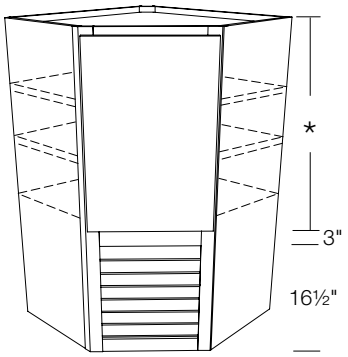

DDWT2745	**DDWT2757**
DDWT2748	**DDWT2760**
DDWT2751	**DDWT2763**
DDWT2754	**DDWT2766**

DESIGN CONSIDERATIONS

45", 48", 51", 54", 57", 60", 63", 66" High - 15" Deep

- Available in Alder, Cherry, Hickory, Maple, Oak and Walnut
- Not designed to be installed next to other 15" deep cabinets.
- Wood tambour is 16½" high
- Clearance of open tambour is 14"
- Not designed to be installed next to other 15" deep cabinets.
- Flush finished end panels are standard.
- No cabinet back in lower appliance area for access to wall outlets.
- Mortise and tenon doors greater than 42" high will have a center rail.

HOW TO ORDER

- Specify **L** or **R** hinging
- Pricing P-39

Cabinet Height	Opening of top door	Number of Shelves
45"	24"	2
48"	27"	2
51"	30"	2
54"	33"	2
57"	36"	3
60"	39"	3
63"	42"	3
66"	45"	3

© Copyright StarMark Cabinetry MARCH 2021

Block 1516 Diagonal Wall with Door

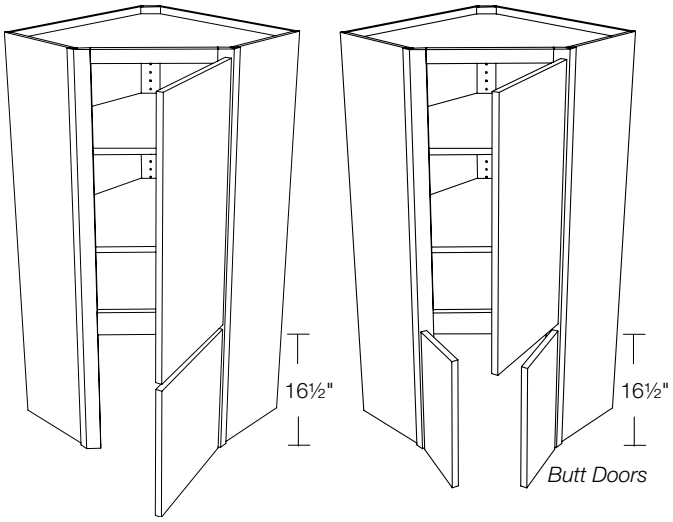

Single Door on bottom	Butt Doors on bottom
DWDR2445	**2DWDR2445**
DWDR2448	**2DWDR2448**
DWDR2451	**2DWDR2451**
DWDR2454	**2DWDR2454**
DWDR2457	**2DWDR2457**
DWDR2460	**2DWDR2460**
DWDR2463	**2DWDR2463**
DWDR2466	**2DWDR2466**

DESIGN CONSIDERATIONS

45", 48", 51", 54", 57", 60", 63", 66" High - 12" Deep

- No bottom rail in lower opening
- When arched door style is specified for order, arch door on top door only
- No cabinet back in lower appliance area for access to wall outlets.
- Mortise and tenon doors greater than 42" high will have a center rail.
- Modern overlay doors are automatically reduced in width for clearance when installed next to other cabinets with doors.

HOW TO ORDER

- Specify **L** or **R** hinging
- Pricing P-39

Cabinet Height	Opening of top door	Number of Shelves
45"	24"	2
48"	27"	2
51"	30"	2
54"	33"	2
57"	36"	3
60"	39"	3
63"	42"	3
66"	45"	3

INSTALLATION TIP

Bottom door swing may be restricted by countertops with no-drip edge or bull nose tile

NOTES/CAUTION

- 2DWDR (Butt doors) not available in inset.

Block 1517 Diagonal Wall with Drawers

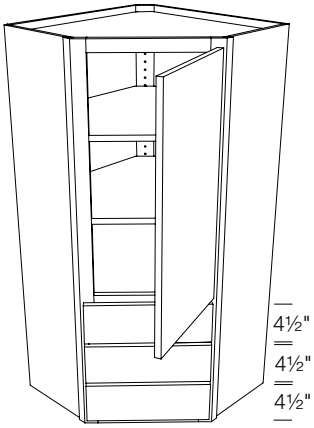

DW3D2445	**DW3D2460**
DW3D2448	**DW3D2463**
DW3D2451	**DW3D2466**
DW3D2454	
DW3D2457	

DESIGN CONSIDERATIONS

45", 48", 51", 54", 57", 60", 63", 66" High - 12" Deep

- With all overlays, there is a ¼" reveal between all drawer headers.
- Mortise and tenon doors greater than 42" high will have a center rail.
- Modern overlay doors are automatically reduced in width for clearance when installed next to other cabinets with doors.

HOW TO ORDER

- Specify **L** or **R** hinging
- Pricing P-40

Cabinet Height	Opening of top door	Number of Shelves
45"	24"	2
48"	27"	2
51"	30"	2
54"	33"	2
57"	36"	3
60"	39"	3
63"	42"	3
66"	45"	3

INSTALLATION TIP

Bottom drawer may be restricted by countertops with no-drip edge or bull nose tile

NOTES/CAUTION

- Inset cabinet will be built with two drawers.

© Copyright StarMark Cabinetry MARCH 2021

DIAGONAL WALL/DEEP DIAGONAL WALL/PENINSULA DIAGONAL WALL

Dimensions apply for blocks 1500, 1506, 1508, 1509, 1511, 1516, 1517, 1520, 1522, 1525, 1531, 1532, 1534, 1535, 1536, 1556

DW
DWCWL
DWCWLT
DWL
DWT
DWWLDR
DWSCK
DWDR
DW3D
DWLW
DLWDR
DWLW3D
DWLWT
DWDRLU
DLWDLU
DWLDRU

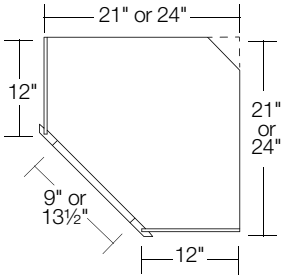

Dimensions apply for blocks 1505, 1507, 1510, 1515,1518, 1519, 1523, 1538

DDW
DDWDR
DDWT
DDW3D
DDWLW
DDWLD
DDWDLU
DDWLDU

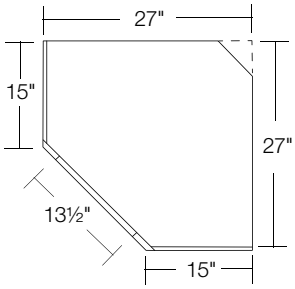

Block 1518 Deep Diagonal Wall with Door

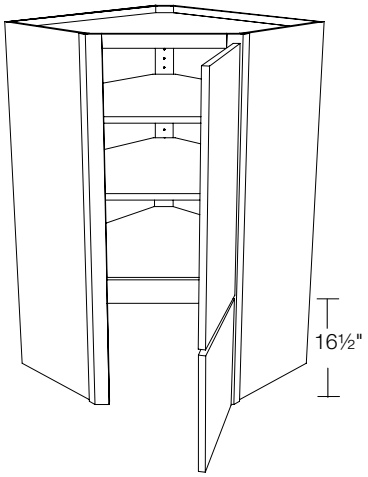

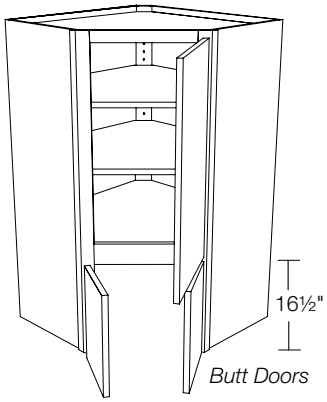

Single Door on bottom	Butt Doors on bottom
DDWDR2745	**2DDWDR2745**
DDWDR2748	**2DDWDR2748**
DDWDR2751	**2DDWDR2751**
DDWDR2754	**2DDWDR2754**
DDWDR2757	**2DDWDR2757**
DDWDR2760	**2DDWDR2760**
DDWDR2763	**2DDWDR2763**
DDWDR2766	**2DDWDR2766**

DESIGN CONSIDERATIONS

45", 48", 51", 54", 57", 60", 63", 66" High - 15" Deep

- No bottom rail in lower opening
- When arched door style is specified for order, arch door on top door only
- Not designed to be installed next to other 15" deep cabinets.
- Flush finished end panels are standard.
- No cabinet back in lower appliance area for access to wall outlets.
- Mortise and tenon doors greater than 42" high will have a center rail.

HOW TO ORDER

- Specify **L** or **R** hinging
- Pricing P-40

Cabinet Height	Opening of top door	Number of Shelves
45"	24"	2
48"	27"	2
51"	30"	2
54"	33"	2
57"	36"	3
60"	39"	3
63"	42"	3
66"	45"	3

INSTALLATION TIP

Bottom door swing may be restricted by countertops with no-drip edge or bull nose tile.

NOTES/CAUTION

- 2DDWDR (Butt doors) not available in inset.

© Copyright StarMark Cabinetry MARCH 2021

Block 1519 Deep Diagonal Wall with Drawers

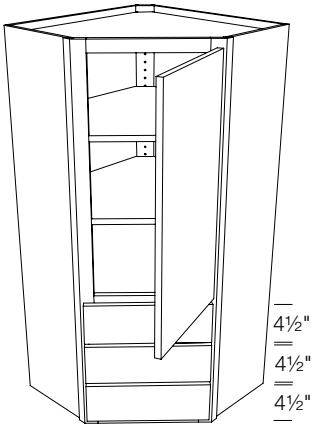

DDW3D2745
DDW3D2748
DDW3D2751
DDW3D2754
DDW3D2757
DDW3D2760
DDW3D2763
DDW3D2766

DESIGN CONSIDERATIONS

45", 48", 51", 54", 57", 60", 63", 66" High - 15" Deep

- With all overlays, there is a ¼" reveal between all drawer headers.
- Not designed to be installed next to other 15" deep cabinets.
- Flush finished end panels are standard.
- Mortise and tenon doors greater than 42" high will have a center rail.

HOW TO ORDER

- Specify **L** or **R** hinging
- Pricing P-41

Cabinet Height	Opening of top door	Number of Shelves
45"	24"	2
48"	27"	2
51"	30"	2
54"	33"	2
57"	36"	3
60"	39"	3
63"	42"	3
66"	45"	3

INSTALLATION TIP

Bottom drawer may be restricted by countertops with no-drip edge or bull nose tile.

NOTES/CAUTION

- Inset cabinet will be built with two drawers.

Block 1520 Diagonal Wall with Lazy Susan

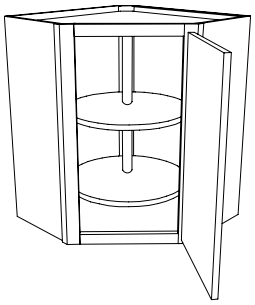

DWL2124
DWL2424

DWL2127
DWL2427

DWL2130
DWL2430

DWL2133
DWL2433

DWL2136
DWL2436

DWL2139
DWL2439

DWL2142
DWL2442

DESIGN CONSIDERATIONS

24", 27", 30", 33", 36", 39", 42" High - 12" Deep

- 18" diameter poly turntables
- 21" wide cabinets will not accept glass in door
- Mortise and tenon doors greater than 42" high will have a center rail.
- Modern overlay doors are automatically reduced in width for clearance when installed next to other cabinets with doors.

HOW TO ORDER

- Specify **L** or **R** hinging
- Pricing P-41

Cabinet Height	Number of Turntables
24"	2
27"	2
30"	2
33"	2
36"	2
39"	3
42"	3

© Copyright StarMark Cabinetry MARCH 2021

DIAGONAL WALL/DEEP DIAGONAL WALL/PENINSULA DIAGONAL WALL

Dimensions apply for blocks 1500, 1506, 1508, 1509, 1511, 1516, 1517, 1520, 1522, 1525, 1531, 1532, 1534, 1535, 1536, 1556

DW
DWCWL
DWCWLT
DWL
DWT
DWWLDR
DWSCK
DWDR
DW3D
DWLW
DLWDR
DWLW3D
DWLWT
DWDRLU
DLWDLU
DWLDRU

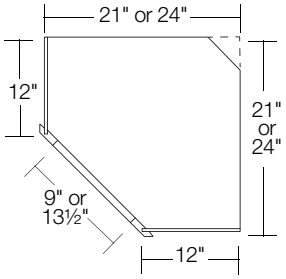

Dimensions apply for blocks 1505, 1507, 1510, 1515,1518, 1519, 1523, 1538

DDW
DDWDR
DDWT
DDW3D
DDWLW
DDWLD
DDWDLU
DDWLDU

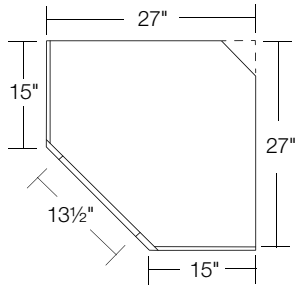

Block 1522 Diagonal Wall with Wood Trays

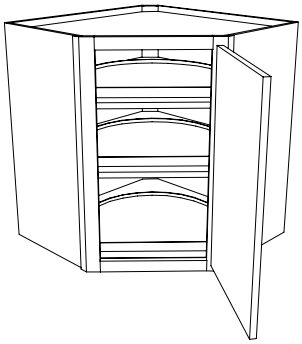

DWLW2427
DWLW2430
DWLW2433
DWLW2436
DWLW2439
DWLW2442

DESIGN CONSIDERATIONS

27", 30", 33", 36", 39", 42" High - 12" Deep

- 20" "D" shaped wood turntables on adjustable shelves and one on floor of cabinet
- Mortise and tenon doors greater than 42" high will have a center rail.
- Modern overlay doors are automatically reduced in width for clearance when installed next to other cabinets with doors.

HOW TO ORDER

- Specify **L** or **R** hinging
- Pricing P-42

Cabinet Height	Number of Shelf Turntables*
27"	2
30"	2
33"	2
36"	2
39"	3
42"	3

* In addition to 1 turntable on floor of cabinet

Block 1523 Deep Diagonal Wall with Wood Trays

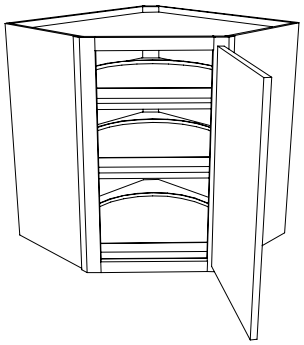

DDWLW2727
DDWLW2730
DDWLW2733
DDWLW2736
DDWLW2739
DDWLW2742

DESIGN CONSIDERATIONS

27", 30", 33", 36", 39", 42" High - 15" Deep

- 20" "D" shaped wood turntables on adjustable shelves and one on floor of cabinet
- Flush finished end panels are standard.
- Not designed to be installed next to other 15" deep cabinets.
- Mortise and tenon doors greater than 42" high will have a center rail.

HOW TO ORDER

- Specify **L** or **R** hinging
- Pricing P-42

Cabinet Height	Number of Shelf Turntables*
27"	2
30"	2
33"	2
36"	2
39"	3
42"	3

* In addition to 1 turntable on floor of cabinet

© Copyright StarMark Cabinetry MARCH 2021

Block 1525 Diagonal Wall with Chrome/Wood Lazy Susan

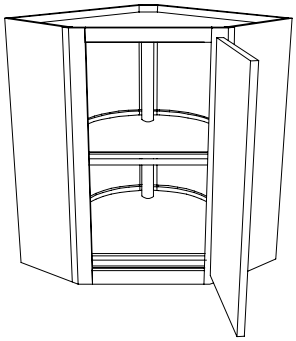

DWCWL2430
DWCWL2436
DWCWL2442

DESIGN CONSIDERATIONS

30", 36", 42" High - 12" Deep

- Pole is placed on the back of the turntables for optimal storage
- 20" "D" shaped wood turntables have chrome railings and non-skid surface
- Mortise and tenon doors greater than 42" high will have a center rail.
- Modern overlay doors are automatically reduced in width for clearance when installed next to other cabinets with doors.

HOW TO ORDER

- Specify **L** or **R** hinging
- Pricing P-42

Cabinet Height	Number of Turntables
30"	2
36"	2
42"	3

NOTES/CAUTION

- Inset concealed hinges not available

Block 1531 Diagonal Wall with Wood Trays and Door

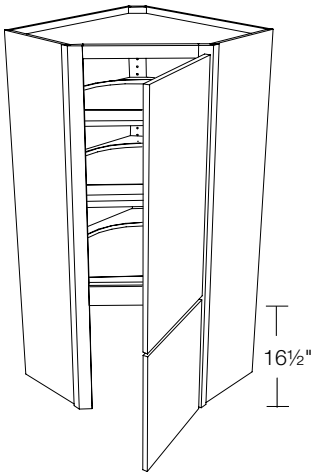

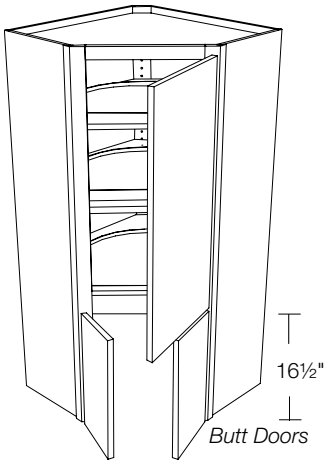

Single Door
DLWDR2445
DLWDR2448
DLWDR2451
DLWDR2454
DLWDR2457
DLWDR2460

Butt Doors
2DLWDR2445
2DLWDR2448
2DLWDR2451
2DLWDR2454
2DLWDR2457
2DLWDR2460

DESIGN CONSIDERATIONS

45", 48", 51", 54", 57", 60" High - 12" Deep

- 20" "D" shaped wood turntables on adjustable shelves and one on floor of cabinet
- No bottom rail in lower opening
- When arched door style is specified for order, arch door on top door only
- No cabinet back in lower appliance area for access to wall outlets.
- Mortise and tenon doors greater than 42" high will have a center rail.
- Modern overlay doors are automatically reduced in width for clearance when installed next to other cabinets with doors.

HOW TO ORDER

- Specify **L** or **R** hinging
- Pricing P-43

Cabinet Height	Opening of top door	Number of Shelf Turntables*
45"	24"	2
48"	27"	2
51"	30"	2
54"	33"	2
57"	36"	3
60"	39"	3

* In addition to 1 turntable on floor of cabinet

INSTALLATION TIP

Bottom door swing may be restricted by countertops with no-drip edge or bull nose tile.

NOTES/CAUTION

- 2DLWDR (Butt doors) not available in inset.

© Copyright StarMark Cabinetry MARCH 2021

DIAGONAL WALL/DEEP DIAGONAL WALL/PENINSULA DIAGONAL WALL

Dimensions apply for blocks 1500, 1506, 1508, 1509, 1511, 1516, 1517, 1520, 1522, 1525, 1531, 1532, 1534, 1535, 1536, 1556

DW	DW3D
DWCWL	DWLW
DWCWLT	DLWDR
DWL	DWLW3D
DWT	DWLWT
DWWLDR	DWDRLU
DWSCK	DLWDLU
DWDR	DWLDRU

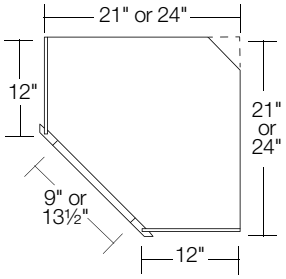

Dimensions apply for blocks 1505, 1507, 1510, 1515,1518, 1519, 1523, 1538

DDW
DDWDR
DDWT
DDW3D
DDWLW
DDWLD
DDWDLU
DDWLDU

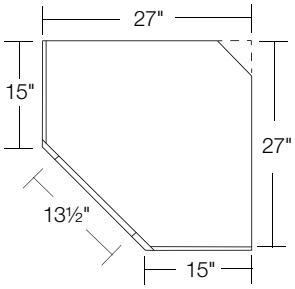

Block 1532 Diagonal Wall with Chrome/Wood Lazy Susan and Door

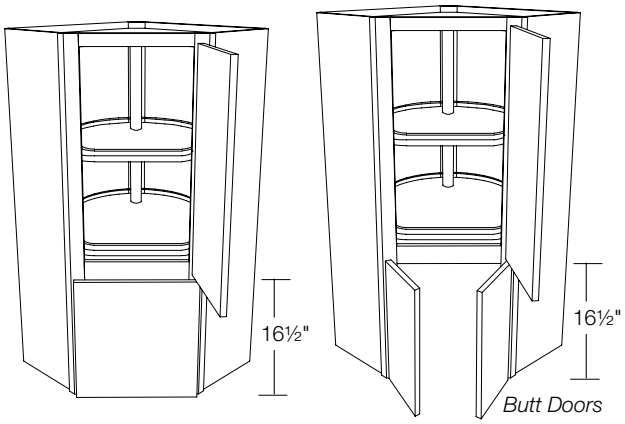

Single Door on Bottom
DWWLDR2448
DWWLDR2454
DWWLDR2460

Butt Doors on Bottom
2DWLDR2448
2DWLDR2454
2DWLDR2460

DESIGN CONSIDERATIONS

48", 54", 60" High - 12" Deep

- Pole is placed on the back of the turntables for optimal storage
- 20" "D" shaped wood turntables have chrome railings and non-skid surface
- No bottom rail in lower opening
- When arched door style is specified for order, arch door on top door only
- No cabinet back in lower appliance area for access to wall outlets.
- Mortise and tenon doors greater than 42" high will have a center rail.
- Modern overlay doors are automatically reduced in width for clearance when installed next to other cabinets with doors.

HOW TO ORDER

- Specify **L** or **R** hinging
- Pricing P-43

Cabinet Height	Opening of top door	Number of Turntables
48"	27"	2
54"	33"	2
60"	39"	3

INSTALLATION TIP

Bottom door swing may be restricted by countertops with no-drip edge or bull nose tile.

NOTES/CAUTION

- 2DWLDR (Butt doors) not available in inset.
- Inset concealed hinges not available.

© Copyright StarMark Cabinetry MARCH 2021

Block 1534 Diagonal Wall with Wood Trays and Drawers

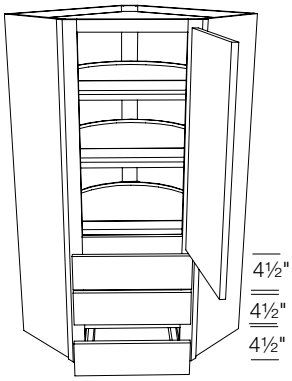

DWLW3D2445
DWLW3D2448
DWLW3D2451
DWLW3D2454
DWLW3D2457
DWLW3D2460

DESIGN CONSIDERATIONS

45", 48", 51", 54", 57", 60" High - 12" Deep

- 20" "D" shaped wood turntables on adjustable shelves and one on floor of cabinet
- With all overlays, there is a ¼" reveal between all drawer headers.
- Mortise and tenon doors greater than 42" high will have a center rail.
- Modern overlay doors are automatically reduced in width for clearance when installed next to other cabinets with doors.

HOW TO ORDER

- Specify **L** or **R** hinging
- Pricing P-43

Cabinet Height	Opening of top door	Number of Shelf Turntables*
45"	24"	2
48"	27"	2
51"	30"	2
54"	33"	2
57"	36"	3
60"	39"	3

* In addition to 1 turntable on floor of cabinet

INSTALLATION TIP

Bottom drawer may be restricted by countertops with no-drip edge or bull nose tile.

NOTES/CAUTION

- Inset cabinets will be built with two drawers.

Block 1535 Diagonal Wall Chrome/Wood Lazy Susan with Tambour

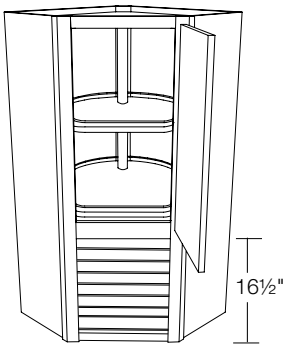

DWCWLT2448
DWCWLT2454
DWCWLT2460

DESIGN CONSIDERATIONS

48", 54", 60" High - 12" Deep

- Available in Alder, Cherry, Hickory, Maple, Oak and Walnut
- Pole is placed on the back of the turntables for optimal storage
- 20" "D" shaped wood turntables have chrome railings and non-skid surface
- Wood tambour is 16½" high
- Clearance of open tambour is 14"
- No cabinet back in lower appliance area for access to wall outlets.
- Mortise and tenon doors greater than 42" high will have a center rail.
- Modern overlay doors are automatically reduced in width for clearance when installed next to other cabinets with doors.

HOW TO ORDER

- Specify **L** or **R** hinging
- Pricing P-44

Cabinet Height	Opening of top door	Number of Turntables
48"	27"	2
54"	33"	2
60"	39"	3

NOTES/CAUTION

- Inset concealed hinges not available.

© Copyright StarMark Cabinetry MARCH 2021

DIAGONAL WALL/DEEP DIAGONAL WALL/PENINSULA DIAGONAL WALL

Dimensions apply for blocks 1500, 1506, 1508, 1509, 1511, 1516, 1517, 1520, 1522, 1525, 1531, 1532, 1534, 1535, 1536, 1556

DW
DWCWL
DWCWLT
DWL
DWT
DWWLDR
DWSCK
DWDR
DW3D
DWLW
DLWDR
DWLW3D
DWLWT
DWDRLU
DLWDLU
DWLDRU

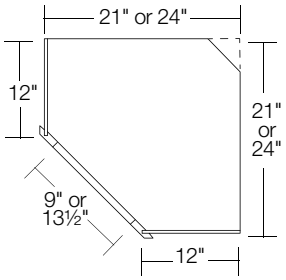

Dimensions apply for blocks 1505, 1507, 1510, 1515,1518, 1519, 1523, 1538

DDW
DDWDR
DDWT
DDW3D
DDWLW
DDWLD
DDWDLU
DDWLDU

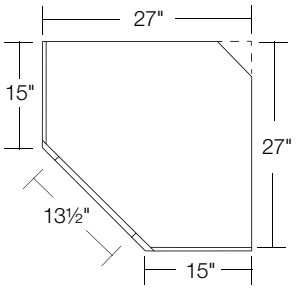

Block 1536 Diagonal Wall with Wood Trays and Tambour

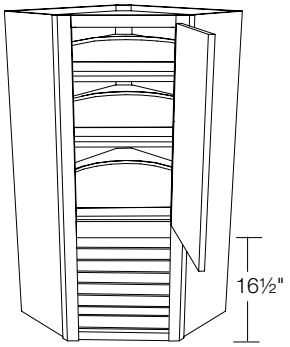

DWLWT2445
DWLWT2448
DWLWT2451
DWLWT2454
DWLWT2457
DWLWT2460

DESIGN CONSIDERATIONS

45", 48", 51", 54", 57", 60" High - 12" Deep

- Available in Alder, Cherry, Hickory, Maple, Oak and Walnut
- 20" "D" shaped wood turntables on adjustable shelves and one on floor of cabinet
- Wood tambour is 16½" high
- Clearance of open tambour is 14"
- No cabinet back in lower appliance area for access to wall outlets.
- Mortise and tenon doors greater than 42" high will have a center rail.
- Modern overlay doors are automatically reduced in width for clearance when installed next to other cabinets with doors.

HOW TO ORDER

- Specify **L** or **R** hinging
- Pricing P-44

Cabinet Height	Opening of top door	Number of Shelf Turntables*
45"	24"	2
48"	27"	2
51"	30"	2
54"	33"	2
57"	36"	3
60"	39"	3

* In addition to 1 turntable on floor of cabinet

© Copyright StarMark Cabinetry MARCH 2021

Block 1538 Deep Diagonal Wall with Wood Trays and Door

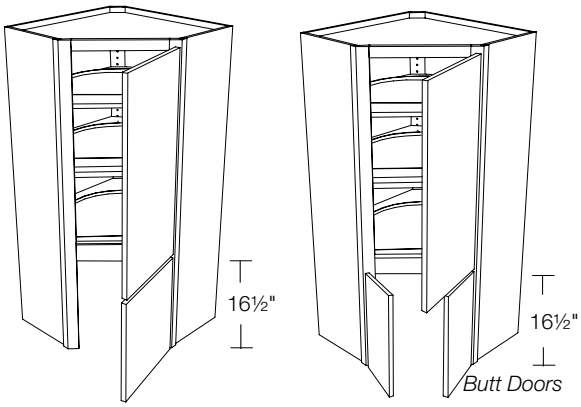

Single Door
DDWLD2745
DDWLD2748
DDWLD2751
DDWLD2754
DDWLD2757
DDWLD2760

Butt Doors
2DDWLD2745
2DDWLD2748
2DDWLD2751
2DDWLD2754
2DDWLD2757
2DDWLD2760

DESIGN CONSIDERATIONS

45", 48", 51", 54", 57", 60" High - 15" Deep

- 20" "D" shaped wood turntables on adjustable shelves and one on floor of cabinet
- Flush finished end panels are standard.
- No cabinet back in lower appliance area for access to wall outlets.
- No bottom frame rail in lower opening
- When arched door style is specified for order, arch door on top door only
- Mortise and tenon doors greater than 42" high will have a center rail.
- Not designed to be installed next to other 15" deep cabinets.

HOW TO ORDER

- Specify **L** or **R** hinging
- Pricing P-45

Cabinet Height	Opening of top door	Number of Shelf Turntables*
45"	24"	2
48"	27"	2
51"	30"	2
54"	33"	2
57"	36"	3
60"	39"	3

* In addition to 1 turntable on floor of cabinet

INSTALLATION TIP

Bottom door swing may be restricted by countertops with no-drip edge or bull nose tile.

NOTES/CAUTION

- 2DDWLD (Butt doors) not available in Inset.

Block 1556 Diagonal Wall Stacked Cabinet

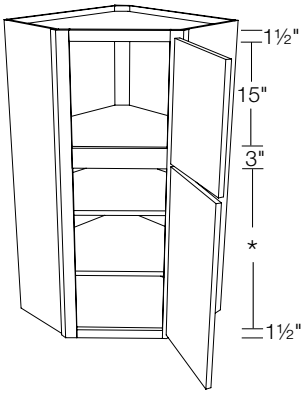

DWSCK2445
DWSCK2448
DWSCK2451
DWSCK2454
DWSCK2457
DWSCK2460
DWSCK2463
DWSCK2466

DESIGN CONSIDERATIONS

45", 48", 51", 54", 57", 60", 63", 66" High - 12" Deep

- Adjustable shelves in lower section. See chart.
- When arched door style is specified for order, arch door on top door only
- When Modern overlay door style is specified for order the doors will have a ¼" space between the top & bottom door. The top door will not align with cabinets stacked on job site.
- Mortise and tenon doors greater than 42" high will have a center rail.
- Modern overlay doors are automatically reduced in width for clearance when installed next to other cabinets with doors.

HOW TO ORDER

- Specify **L** or **R** hinging
- If upper section is for display, specify ID doors for the upper section. The entire cabinet will receive a Finished Veneer Interior (see block 9480 for information).
- Pricing P-45

Cabinet Height	Height of Lower Opening	Number of Shelves
45"	24"	2
48"	27"	2
51"	30"	2
54"	33"	2
57"	36"	3
60"	39"	3
63"	42"	3
66"	45"	3

© Copyright StarMark Cabinetry MARCH 2021

Block 1570 Tambour Appliance Garage

I

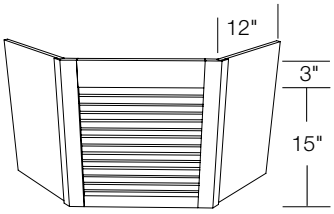

TAG2418

DESIGN CONSIDERATIONS

18" High

- Available in Alder, Cherry, Hickory, Maple, Oak and Walnut
- Delivered unassembled
- Wood tambour is 15" high
- Clearance of open tambour is 12½"
- Finished end panels are standard

HOW TO ORDER

- Pricing P-45

INSTALLATION TIP

- Install flush with face frame

Block 1580 Roll Top Storage

I

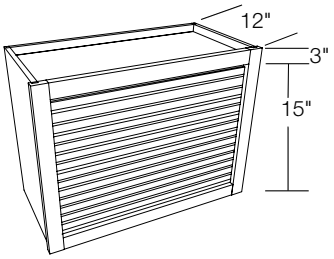

TRT1818 **TRT3018**
TRT2418 **TRT3618**

DESIGN CONSIDERATIONS

18" High - 12" Deep

- Available in Alder, Cherry, Hickory, Maple, Oak and Walnut
- Wood tambour is 15" high
- Clearance of open tambour is 12½"
- Finished end panels are standard

HOW TO ORDER

- Pricing P-46

INSTALLATION TIP

- Install flush with face frame

© Copyright StarMark Cabinetry MARCH 2021

Block 2000 Wall with Tambour

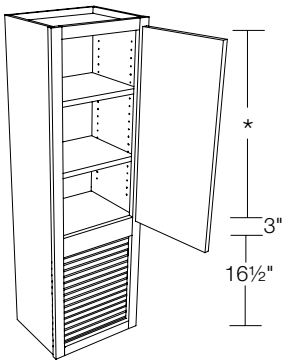

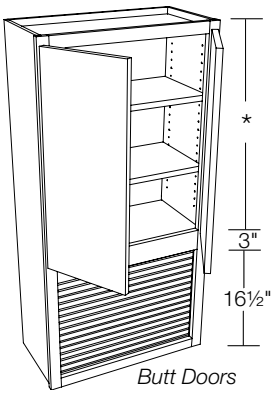

Butt Doors

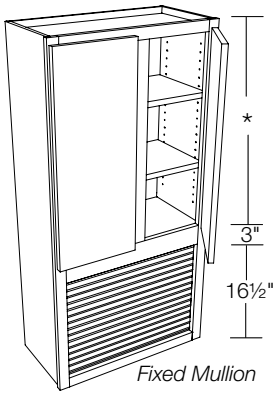

Fixed Mullion

Single Door	Single Door	Butt Doors	Butt Doors	Fixed Mullion	Fixed Mullion
WT1536	**WT1554**	**2WT2436**	**2WT2454**	**WT3036**	**WT3054**
WT1836	**WT1854**	**2WT2736**	**2WT2754**	**WT3336**	**WT3354**
WT2136	**WT2154**	**2WT3036**	**2WT3054**	**WT3636**	**WT3654**
WT2436	**WT2454**	**2WT3336**	**2WT3354**		
		2WT3636	**2WT3654**		
WT1539	**WT1557**	**2WT2439**	**2WT2457**	**WT3039**	**WT3057**
WT1839	**WT1857**	**2WT2739**	**2WT2757**	**WT3339**	**WT3357**
WT2139	**WT2157**	**2WT3039**	**2WT3057**	**WT3639**	**WT3657**
WT2439	**WT2457**	**2WT3339**	**2WT3357**		
		2WT3639	**2WT3657**		
WT1542	**WT1560**	**2WT2442**	**2WT2460**	**WT3042**	**WT3060**
WT1842	**WT1860**	**2WT2742**	**2WT2760**	**WT3342**	**WT3360**
WT2142	**WT2160**	**2WT3042**	**2WT3060**	**WT3642**	**WT3660**
WT2442	**WT2460**	**2WT3342**	**2WT3360**		
		2WT3642	**2WT3660**		
WT1545	**WT1563**	**2WT2445**	**2WT2463**	**WT3045**	**WT3063**
WT1845	**WT1863**	**2WT2745**	**2WT2763**	**WT3345**	**WT3363**
WT2145	**WT2163**	**2WT3045**	**2WT3063**	**WT3645**	**WT3663**
WT2445	**WT2463**	**2WT3345**	**2WT3363**		
		2WT3645	**2WT3663**		
WT1548	**WT1566**	**2WT2448**	**2WT2466**	**WT3048**	**WT3066**
WT1848	**WT1866**	**2WT2748**	**2WT2766**	**WT3348**	**WT3366**
WT2148	**WT2166**	**2WT3048**	**2WT3066**	**WT3648**	**WT3666**
WT2448	**WT2466**	**2WT3348**	**2WT3366**		
		2WT3648	**2WT3666**		
WT1551		**2WT2451**		**WT3051**	
WT1851		**2WT2751**		**WT3351**	
WT2151		**2WT3051**		**WT3651**	
WT2451		**2WT3351**			
		2WT3651			

DESIGN CONSIDERATIONS

36", 39", 42", 45", 48", 51", 54", 57", 60", 63", 66" High - 12" Deep

- Available in Alder, Cherry, Hickory, Maple, Oak and Walnut
- Adjustable shelves. See chart.
- Wood tambour is 16½" high
- Clearance of open tambour is 14"
- No cabinet back in lower appliance area for access to wall outlets.
- Mortise and tenon doors greater than 42" high will have a center rail.

HOW TO ORDER

- Specify **L** or **R** hinging for Single Door cabinet
- Pricing P-47-48

Cabinet Height	Height of Top Opening	Number of Shelves
36"	15"	0
39"	18"	1
42"	21"	1
45"	24"	2
48"	27"	2
51"	30"	2
54"	33"	2
57"	36"	3
60"	39"	3
63"	42"	3
66"	45"	3

© Copyright StarMark Cabinetry MARCH 2021

Block 2001 Wall with Appliance Door

I

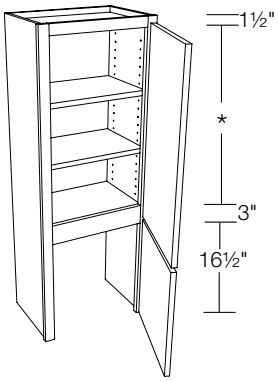

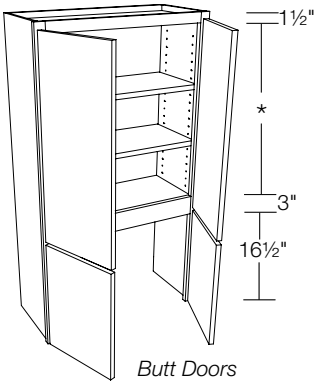

Butt Doors

Single Door	Single Door	Butt Doors	Butt Doors
WDR1536	**WDR1554**	**2WDR2436**	**2WDR2454**
WDR1836	**WDR1854**	**2WDR2736**	**2WDR2754**
WDR2136	**WDR2154**	**2WDR3036**	**2WDR3054**
WDR2436	**WDR2454**	**2WDR3336**	**2WDR3354**
		2WDR3636	**2WDR3654**
WDR1539	**WDR1557**	**2WDR2439**	**2WDR2457**
WDR1839	**WDR1857**	**2WDR2739**	**2WDR2757**
WDR2139	**WDR2157**	**2WDR3039**	**2WDR3057**
WDR2439	**WDR2457**	**2WDR3339**	**2WDR3357**
		2WDR3639	**2WDR3657**
WDR1542	**WDR1560**	**2WDR2442**	**2WDR2460**
WDR1842	**WDR1860**	**2WDR2742**	**2WDR2760**
WDR2142	**WDR2160**	**2WDR3042**	**2WDR3060**
WDR2442	**WDR2460**	**2WDR3342**	**2WDR3360**
		2WDR3642	**2WDR3660**
WDR1545	**WDR1563**	**2WDR2445**	**2WDR2463**
WDR1845	**WDR1863**	**2WDR2745**	**2WDR2763**
WDR2145	**WDR2163**	**2WDR3045**	**2WDR3063**
WDR2445	**WDR2463**	**2WDR3345**	**2WDR3363**
		2WDR3645	**2WDR3663**
WDR1548	**WDR1566**	**2WDR2448**	**2WDR2466**
WDR1848	**WDR1866**	**2WDR2748**	**2WDR2766**
WDR2148	**WDR2166**	**2WDR3048**	**2WDR3066**
WDR2448	**WDR2466**	**2WDR3348**	**2WDR3366**
		2WDR3648	**2WDR3666**
WDR1551		**2WDR2451**	
WDR1851		**2WDR2751**	
WDR2151		**2WDR3051**	
WDR2451		**2WDR3351**	
		2WDR3651	

DESIGN CONSIDERATIONS

36", 39", 42", 45", 48", 51", 54", 57", 60", 63", 66" High - 12" Deep

- Adjustable shelves. See chart.
- When arched door style is specified on order, arch door on top door only
- No cabinet back in lower appliance area for access to wall outlets.
- Mortise and tenon doors greater than 42" high will have a center rail.

HOW TO ORDER

- Specify **L** or **R** hinging for Single Door cabinet
- Pricing P-49-50

Cabinet Height	Height of Top Opening	Number of Shelves
36"	15"	0
39"	18"	1
42"	21"	1
45"	24"	2
48"	27"	2
51"	30"	2
54"	33"	2
57"	36"	3
60"	39"	3
63"	42"	3
66"	45"	3

INSTALLATION TIP

Bottom door swing may be restricted by countertops with no-drip edge or bull nose tile.

© Copyright StarMark Cabinetry MARCH 2021

I available in Inset cabinetry

Block 2002 Wall with Appliance Door Vertical Lift Up

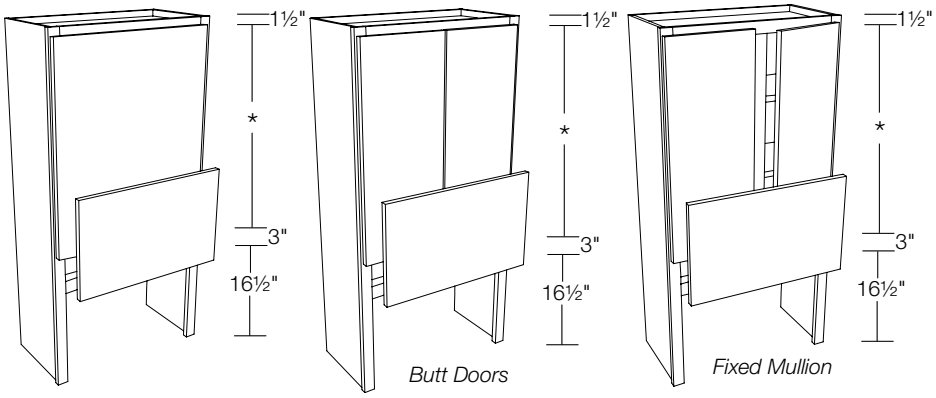

Single Door	Single Door	Butt Doors	Butt Doors	Fixed Mullion	Fixed Mullion
WDRLU1536	**WDRLU1554**	**2WDRLU2436**	**2WDRLU2454**	**WDRLU3036**	**WDRLU3054**
WDRLU1836	**WDRLU1854**	**2WDRLU2736**	**2WDRLU2754**	**WDRLU3336**	**WDRLU3354**
WDRLU2136	**WDRLU2154**	**2WDRLU3036**	**2WDRLU3054**	**WDRLU3636**	**WDRLU3654**
WDRLU2436	**WDRLU2454**	**2WDRLU3336**	**2WDRLU3354**		
		2WDRLU3636	**2WDRLU3654**		
WDRLU1539	**WDRLU1557**	**2WDRLU2439**	**2WDRLU2457**	**WDRLU3039**	**WDRLU3057**
WDRLU1839	**WDRLU1857**	**2WDRLU2739**	**2WDRLU2757**	**WDRLU3339**	**WDRLU3357**
WDRLU2139	**WDRLU2157**	**2WDRLU3039**	**2WDRLU3057**	**WDRLU3639**	**WDRLU3657**
WDRLU2439	**WDRLU2457**	**2WDRLU3339**	**2WDRLU3357**		
		2WDRLU3639	**2WDRLU3657**		
WDRLU1542	**WDRLU1560**	**2WDRLU2442**	**2WDRLU2460**	**WDRLU3042**	**WDRLU3060**
WDRLU1842	**WDRLU1860**	**2WDRLU2742**	**2WDRLU2760**	**WDRLU3342**	**WDRLU3360**
WDRLU2142	**WDRLU2160**	**2WDRLU3042**	**2WDRLU3060**	**WDRLU3642**	**WDRLU3660**
WDRLU2442	**WDRLU2460**	**2WDRLU3342**	**2WDRLU3360**		
		2WDRLU3642	**2WDRLU3660**		
WDRLU1545	**WDRLU1563**	**2WDRLU2445**	**2WDRLU2463**	**WDRLU3045**	**WDRLU3063**
WDRLU1845	**WDRLU1863**	**2WDRLU2745**	**2WDRLU2763**	**WDRLU3345**	**WDRLU3363**
WDRLU2145	**WDRLU2163**	**2WDRLU3045**	**2WDRLU3063**	**WDRLU3645**	**WDRLU3663**
WDRLU2445	**WDRLU2463**	**2WDRLU3345**	**2WDRLU3363**		
		2WDRLU3645	**2WDRLU3663**		
WDRLU1548	**WDRLU1566**	**2WDRLU2448**	**2WDRLU2466**	**WDRLU3048**	**WDRLU3066**
WDRLU1848	**WDRLU1866**	**2WDRLU2748**	**2WDRLU2766**	**WDRLU3348**	**WDRLU3366**
WDRLU2148	**WDRLU2166**	**2WDRLU3048**	**2WDRLU3066**	**WDRLU3648**	**WDRLU3666**
WDRLU2448	**WDRLU2466**	**2WDRLU3348**	**2WDRLU3366**		
		2WDRLU3648	**2WDRLU3666**		
WDRLU1551		**2WDRLU2451**		**WDRLU3051**	
WDRLU1851		**2WDRLU2751**		**WDRLU3351**	
WDRLU2151		**2WDRLU3051**		**WDRLU3651**	
WDRLU2451		**2WDRLU3351**			
		2WDRLU3651			

DESIGN CONSIDERATIONS

36", 39", 42", 45", 48", 51", 54", 57", 60", 63", 66" High - 12" Deep

- Adjustable shelves. See chart.
- Opening clearance of lift up mechanism is 15"
- Lift system raises the door, holds it open and includes soft close
- When arched door style is specified on order, arch door on top door only
- Mullion door not available on lower door
- Reduced depth modification not available
- No cabinet back in lower appliance area for access to wall outlets.
- Doors are a single panel, with the exceptions of Laguna and Lancaster.
- Tempo doors are veneer on cabinets wider than 24".
- Mortise and tenon doors greater than 42" high will have a center rail.
- In the open position, the door extends past the face frame approximately 9¼".

HOW TO ORDER

- Specify **L** or **R** hinging for Single Door cabinet
- Pricing P-51-52

Cabinet Height	Height of Top Opening	Number of Shelves
36"	15"	0
39"	18"	1
42"	21"	1
45"	24"	2
48"	27"	2
51"	30"	2
54"	33"	2
57"	36"	3
60"	39"	3
63"	42"	3
66"	45"	3

NOTES/CAUTION

- Minimum cabinet depth of 12½" in inset.

© Copyright StarMark Cabinetry MARCH 2021

Block 2029 Wall with One Drawer

I

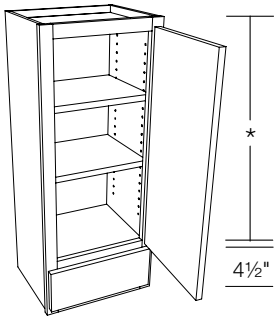

W1D1230
W1D1530
W1D1830
W1D2130
W1D2430

W1D1236
W1D1536
W1D1836
W1D2136
W1D2436

W1D1242
W1D1542
W1D1842
W1D2142
W1D2442

W1D1245
W1D1545
W1D1845
W1D2145
W1D2445

W1D1248
W1D1548
W1D1848
W1D2148
W1D2448

W1D1251
W1D1551
W1D1851
W1D2151
W1D2451

W1D1254
W1D1554
W1D1854
W1D2154
W1D2454

W1D1257
W1D1557
W1D1857
W1D2157
W1D2457

W1D1260
W1D1560
W1D1860
W1D2160
W1D2460

W1D1263
W1D1563
W1D1863
W1D2163
W1D2463

W1D1266
W1D1566
W1D1866
W1D2166
W1D2466

DESIGN CONSIDERATIONS

30″, 36″, 42″, 45″, 48″, 51″, 54″, 57″, 60″, 63″, 66″ High - 12″ Deep

- Adjustable shelves. See chart.
- Mortise and tenon doors greater than 42″ high will have a center rail.

HOW TO ORDER

- Specify **L** or **R** hinging
- Pricing P-53

Cabinet Height	Height of Top Opening	Number of Shelves
30″	21″	1
36″	27″	2
42″	33″	2
45″	36″	3
48″	39″	3
51″	42″	3
54″	45″	3
57″	48″	4
60″	51″	4
63″	54″	4
66″	57″	5

© Copyright StarMark Cabinetry MARCH 2021

Block 2029 Wall with One Drawer

continued

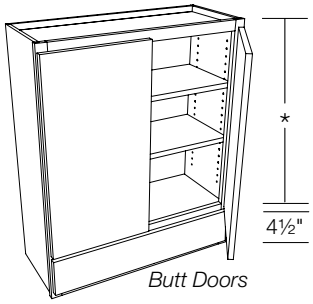

Butt Doors

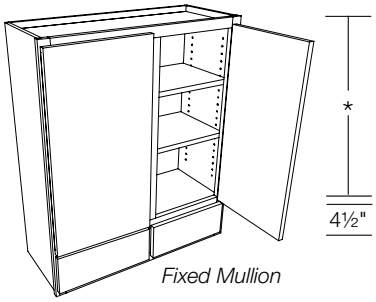

Fixed Mullion

Butt Doors	Butt Doors	Butt Doors	Fixed Mullion	Fixed Mullion
2W1D2430	**2W1D2445**	**2W1D2457**	**W1D3930**	**W1D3954**
2W1D2730	**2W1D2745**	**2W1D2757**	**W1D4230**	**W1D4254**
2W1D3030	**2W1D3045**	**2W1D3057**		
2W1D3330	**2W1D3345**	**2W1D3357**	**W1D3936**	**W1D3957**
2W1D3630	**2W1D3645**	**2W1D3657**	**W1D4236**	**W1D4257**
2W1D3930	**2W1D3945**	**2W1D3957**		
2W1D4230	**2W1D4245**	**2W1D4257**	**W1D3942**	**W1D3960**
			W1D4242	**W1D4260**
2W1D2436	**2W1D2448**	**2W1D2460**		
2W1D2736	**2W1D2748**	**2W1D2760**	**W1D3945**	**W1D3963**
2W1D3036	**2W1D3048**	**2W1D3060**	**W1D4245**	**W1D4263**
2W1D3336	**2W1D3348**	**2W1D3360**		
2W1D3636	**2W1D3648**	**2W1D3660**	**W1D3948**	**W1D3966**
2W1D3936	**2W1D3948**	**2W1D3960**	**W1D4248**	**W1D4266**
2W1D4236	**2W1D4248**	**2W1D4260**		
2W1D2442	**2W1D2451**	**2W1D2463**	**W1D3951**	
2W1D2742	**2W1D2751**	**2W1D2763**	**W1D4251**	
2W1D3042	**2W1D3051**	**2W1D3063**		
2W1D3342	**2W1D3351**	**2W1D3363**		
2W1D3642	**2W1D3651**	**2W1D3663**		
2W1D3942	**2W1D3951**	**2W1D3963**		
2W1D4242	**2W1D4251**	**2W1D4263**		
	2W1D2454	**2W1D2466**		
	2W1D2754	**2W1D2766**		
	2W1D3054	**2W1D3066**		
	2W1D3354	**2W1D3366**		
	2W1D3654	**2W1D3666**		
	2W1D3954	**2W1D3966**		
	2W1D4254	**2W1D4266**		

DESIGN CONSIDERATIONS

30", 36", 42", 45", 48", 51", 54", 57", 60", 63", 66" High - 12" Deep

- Adjustable shelves. See chart.
- Mortise and tenon doors greater than 42" high will have a center rail.

HOW TO ORDER

- Pricing P-54-55

Cabinet Height	Height of Top Opening	Number of Shelves
30"	21"	1
36"	27"	2
42"	33"	2
45"	36"	3
48"	39"	3
51"	42"	3
54"	45"	3
57"	48"	4
60"	51"	4
63"	54"	4
66"	57"	5

© Copyright StarMark Cabinetry MARCH 2021

Block 2030 Wall with Two Drawers

I

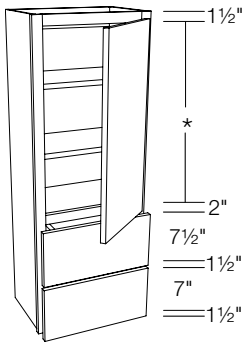

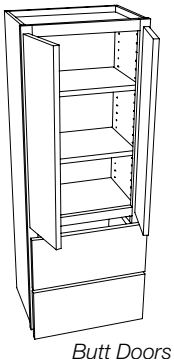

Butt Doors

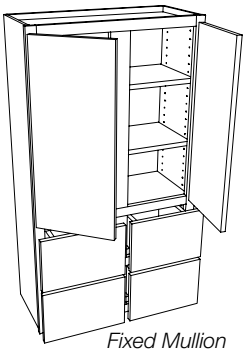

Fixed Mullion

Single Door	Single Door	Butt Doors	Butt Doors	Fixed Mullion	Fixed Mullion
W2D1245	**W2D1257**	**2W2D2445**	**2W2D2457**	**W2D3045**	**W2D3057**
W2D1545	**W2D1557**	**2W2D2745**	**2W2D2757**	**W2D3345**	**W2D3357**
W2D1845	**W2D1857**	**2W2D3045**	**2W2D3057**	**W2D3645**	**W2D3657**
W2D2145	**W2D2157**	**2W2D3345**	**2W2D3357**		
W2D2445	**W2D2457**	**2W2D3645**	**2W2D3657**	**W2D3048**	**W2D3060**
				W2D3348	**W2D3360**
W2D1248	**W2D1260**	**2W2D2448**	**2W2D2460**	**W2D3648**	**W2D3660**
W2D1548	**W2D1560**	**2W2D2748**	**2W2D2760**		
W2D1848	**W2D1860**	**2W2D3048**	**2W2D3060**	**W2D3051**	**W2D3063**
W2D2148	**W2D2160**	**2W2D3348**	**2W2D3360**	**W2D3351**	**W2D3363**
W2D2448	**W2D2460**	**2W2D3648**	**2W2D3660**	**W2D3651**	**W2D3663**
W2D1251	**W2D1263**	**2W2D2451**	**2W2D2463**	**W2D3054**	**W2D3066**
W2D1551	**W2D1563**	**2W2D2751**	**2W2D2763**	**W2D3354**	**W2D3366**
W2D1851	**W2D1863**	**2W2D3051**	**2W2D3063**	**W2D3654**	**W2D3666**
W2D2151	**W2D2163**	**2W2D3351**	**2W2D3363**		
W2D2451	**W2D2463**	**2W2D3651**	**2W2D3663**		
W2D1254	**W2D1266**	**2W2D2454**	**2W2D2466**		
W2D1554	**W2D1566**	**2W2D2754**	**2W2D2766**		
W2D1854	**W2D1866**	**2W2D3054**	**2W2D3066**		
W2D2154	**W2D2166**	**2W2D3354**	**2W2D3366**		
W2D2454	**W2D2466**	**2W2D3654**	**2W2D3666**		

DESIGN CONSIDERATIONS

45", 48", 51", 54", 57", 60", 63", 66" High - 12" Deep

- Adjustable shelves. See chart.
- Mortise and tenon doors greater than 42" high will have a center rail.

HOW TO ORDER

- Specify **L** or **R** hinging for Single Door cabinet
- Pricing P-57-58

Cabinet Height	Height of Top Opening	Number of Shelves
45"	24"	2
48"	27"	2
51"	30"	2
54"	33"	2
57"	36"	3
60"	39"	3
63"	42"	3
66"	45"	3

© Copyright StarMark Cabinetry MARCH 2021

Block 2031 Wall with Three Drawers

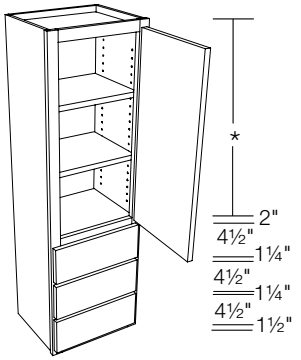

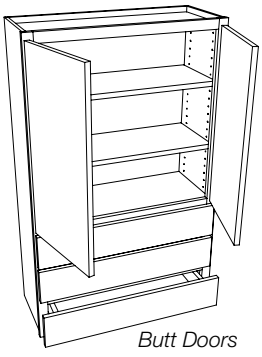

Butt Doors

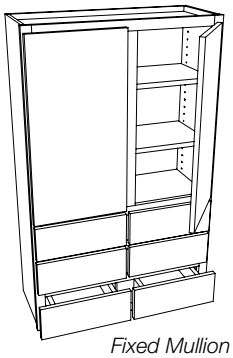

Fixed Mullion

Single Door	Single Door	Butt Doors	Butt Doors	Fixed Mullion	Fixed Mullion
W3D1245	**W3D1257**	**2W3D2445**	**2W3D2457**	**W3D3045**	**W3D3057**
W3D1545	**W3D1557**	**2W3D2745**	**2W3D2757**	**W3D3345**	**W3D3357**
W3D1845	**W3D1857**	**2W3D3045**	**2W3D3057**	**W3D3645**	**W3D3657**
W3D2145	**W3D2157**	**2W3D3345**	**2W3D3357**		
W3D2445	**W3D2457**	**2W3D3645**	**2W3D3657**	**W3D3048**	**W3D3060**
				W3D3348	**W3D3360**
W3D1248	**W3D1260**	**2W3D2448**	**2W3D2460**	**W3D3648**	**W3D3660**
W3D1548	**W3D1560**	**2W3D2748**	**2W3D2760**		
W3D1848	**W3D1860**	**2W3D3048**	**2W3D3060**	**W3D3051**	**W3D3063**
W3D2148	**W3D2160**	**2W3D3348**	**2W3D3360**	**W3D3351**	**W3D3363**
W3D2448	**W3D2460**	**2W3D3648**	**2W3D3660**	**W3D3651**	**W3D3663**
W3D1251	**W3D1263**	**2W3D2451**	**2W3D2463**	**W3D3054**	**W3D3066**
W3D1551	**W3D1563**	**2W3D2751**	**2W3D2763**	**W3D3354**	**W3D3366**
W3D1851	**W3D1863**	**2W3D3051**	**2W3D3063**	**W3D3654**	**W3D3666**
W3D2151	**W3D2163**	**2W3D3351**	**2W3D3363**		
W3D2451	**W3D2463**	**2W3D3651**	**2W3D3663**		
W3D1254	**W3D1266**	**2W3D2454**	**2W3D2466**		
W3D1554	**W3D1566**	**2W3D2754**	**2W3D2766**		
W3D1854	**W3D1866**	**2W3D3054**	**2W3D3066**		
W3D2154	**W3D2166**	**2W3D3354**	**2W3D3366**		
W3D2454	**W3D2466**	**2W3D3654**	**2W3D3666**		

DESIGN CONSIDERATIONS

45", 48", 51", 54", 57", 60", 63", 66" High - 12" Deep

- Adjustable shelves. See chart.
- With all overlays, there is a ¼" reveal between all drawer headers.
- Mortise and tenon doors greater than 42" high will have a center rail.

HOW TO ORDER

- Specify **L** or **R** hinging for Single Door cabinet
- Pricing P-59-60

Cabinet Height	Height of Top Opening	Number of Shelves
45"	24"	2
48"	27"	2
51"	30"	2
54"	33"	2
57"	36"	3
60"	39"	3
63"	42"	3
66"	45"	3

© Copyright StarMark Cabinetry MARCH 2021

Block 2040 Microwave Wall

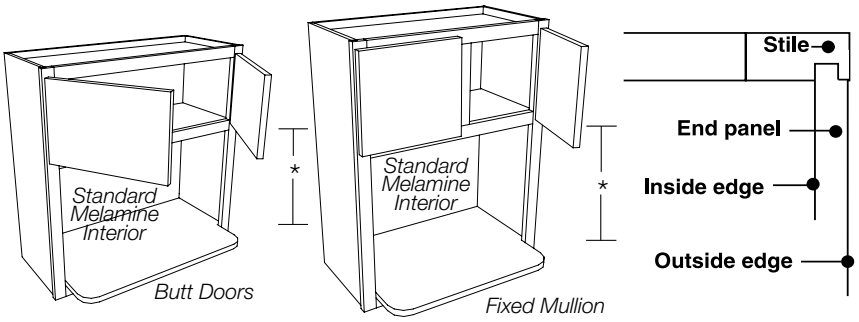

Butt Doors	Butt Doors	Fixed Mullion	Fixed Mullion
2MW2430	**2MW2445**	**MW3030**	**MW3045**
2MW2730	**2MW2745**	**MW3330**	**MW3345**
2MW3030	**2MW3045**	**MW3630**	**MW3645**
2MW3330	**2MW3345**		
2MW3630	**2MW3645**	**MW3033**	**MW3048**
		MW3333	**MW3348**
2MW2433	**2MW2448**	**MW3633**	**MW3648**
2MW2733	**2MW2748**		
2MW3033	**2MW3048**	**MW3036**	**MW3051**
2MW3333	**2MW3348**	**MW3336**	**MW3351**
2MW3633	**2MW3648**	**MW3636**	**MW3651**
2MW2436	**2MW2451**	**MW3039**	**MW3054**
2MW2736	**2MW2751**	**MW3339**	**MW3354**
2MW3036	**2MW3051**	**MW3639**	**MW3654**
2MW3336	**2MW3351**		
2MW3636	**2MW3651**	**MW3042**	
		MW3342	
2MW2439	**2MW2454**	**MW3642**	
2MW2739	**2MW2754**		
2MW3039	**2MW3054**		
2MW3339	**2MW3354**		
2MW3639	**2MW3654**		
2MW2442			
2MW2742			
2MW3042			
2MW3342			
2MW3642			

DESIGN CONSIDERATIONS

30", 33", 36", 39", 42", 45", 48", 51", 54" High - 12" Deep

- Microwave shelf is ¾" thick by 16½" deep
- Microwave shelf has solid hardwood front
- Standard melamine interior
- Microwave shelf is finished in match cabinet face frame
- Do not place this cabinet adjacent to a Diagonal Wall cabinet
- Adjustable shelves. See chart.
- End panels are shifted to outside frame edge, eliminating ¼" reveal. End panels are not flush. See detail.

HOW TO ORDER

✪ To order this item, you must fill out and send an Appliance Template with the order. If an appliance template is not included, the cabinet will be built with an opening that is 16½" high, minus ¾" for the microwave shelf, and a width that is 3" less than the overall cabinet width.

- Pricing P-61

Cabinet Height	Number of Shelves
30", 33", 36"	0
39", 42"	1
45", 48", 51", 54"	2

NOTES/CAUTION I

- On beaded inset face frames, the appliance opening has a flush face frame unless specified otherwise by a drawing.

© Copyright StarMark Cabinetry MARCH 2021

Block 2050 Microwave Garage

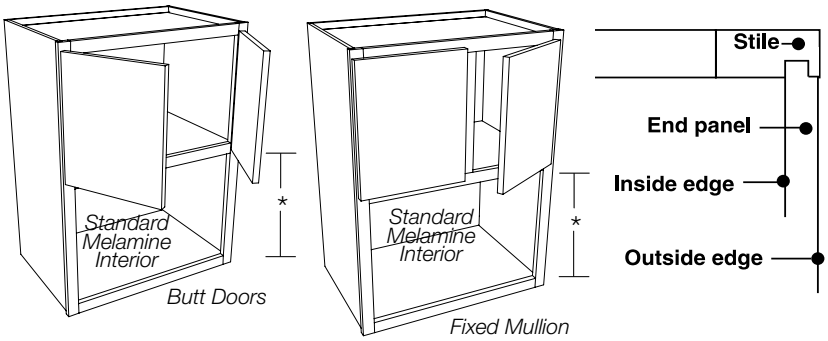

Butt Doors	Butt Doors	Fixed Mullion	Fixed Mullion
2MG2430	**2MG2445**	**MG3030**	**MG3045**
2MG2730	**2MG2745**	**MG3330**	**MG3345**
2MG3030	**2MG3045**		
2MG3330	**2MG3345**	**MG3033**	**MG3048**
		MG3333	**MG3348**
2MG2433	**2MG2448**		
2MG2733	**2MG2748**	**MG3036**	**MG3051**
2MG3033	**2MG3048**	**MG3336**	**MG3351**
2MG3333	**2MG3348**		
		MG3039	**MG3054**
2MG2436	**2MG2451**	**MG3339**	**MG3354**
2MG2736	**2MG2751**		
2MG3036	**2MG3051**	**MG3042**	
2MG3336	**2MG3351**	**MG3342**	
2MG2439	**2MG2454**		
2MG2739	**2MG2754**		
2MG3039	**2MG3054**		
2MG3339	**2MG3354**		
2MG2442			
2MG2742			
2MG3042			
2MG3342			

DESIGN CONSIDERATIONS

30", 33", 36", 39", 42", 45", 48", 51", 54" High - 18" Deep

- Depths to 24" deep available in 1" increments for no extra charge - must specify when ordering
- Standard melamine interior
- Adjustable shelves. See chart.
- End panels are shifted to outside frame edge, eliminating ¼" reveal. End panels are not flush. See detail.

HOW TO ORDER

✪ To order this item, you must fill out and send an Appliance Template with the order. If an appliance template is not included, the cabinet will be built with an opening that is 16½" high and a width that is 3" less than the overall cabinet width.

- Specify depth
- Pricing P-62

Cabinet Height	Number of Shelves
30", 33", 36"	0
39", 42"	1
45", 48", 51", 54"	2

NOTES/CAUTION

- On beaded inset face frames, the appliance opening has a flush face frame unless specified otherwise by a drawing.

© Copyright StarMark Cabinetry MARCH 2021

Block 2071 Microwave Garage with Appliance Doors

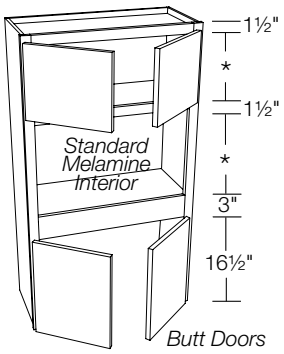

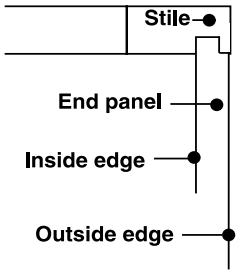

Butt Doors	Butt Doors
2MGDR2745	**2MGDR2757**
2MGDR3045	**2MGDR3057**
2MGDR3345	**2MGDR3357**
2MGDR2748	**2MGDR2760**
2MGDR3048	**2MGDR3060**
2MGDR3348	**2MGDR3360**
2MGDR2751	**2MGDR2763**
2MGDR3051	**2MGDR3063**
2MGDR3351	**2MGDR3363**
2MGDR2754	**2MGDR2766**
2MGDR3054	**2MGDR3066**
2MGDR3354	**2MGDR3366**

DESIGN CONSIDERATIONS

45", 48", 51", 54", 57", 60", 63", 66" High - 18" Deep

- Depths to 24" deep available in 1" increments for no extra charge - must specify when ordering
- Standard melamine interior
- No cabinet back in lower appliance area for access to wall outlets
- End panels are shifted to outside frame edge, eliminating ¼" reveal. End panels are not flush. See detail.

HOW TO ORDER

✪ To order this item, you must fill out and send an Appliance Template with the order. If an appliance template is not included, the cabinet will be built with an opening that is 16½" high and a width that is 3" less than the overall cabinet width.

- Specify depth
- Pricing P-63

INSTALLATION TIP

Bottom door swing may be restricted by countertops with no-drip edge or bull nose tile.

NOTES/CAUTION

- On beaded inset face frames, the appliance opening has a flush face frame unless specified otherwise by a drawing.

Block 2080 Microwave Diagonal Wall

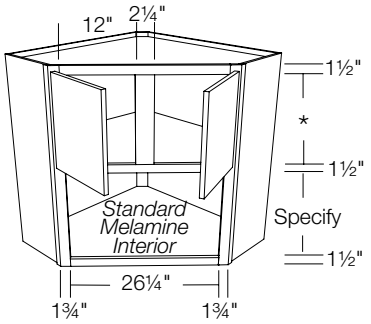

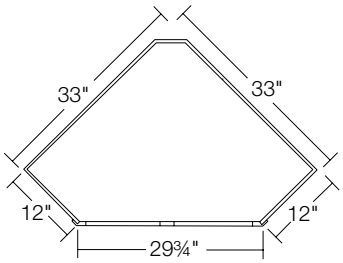

Fixed Mullion
MDW3330
MDW3333
MDW3336
MDW3339
MDW3342
MDW3345
MDW3348
MDW3351
MDW3354
MDW3357
MDW3360
MDW3363
MDW3366

DESIGN CONSIDERATIONS

30", 33", 36", 39", 42", 45", 48", 51", 54", 57", 60", 63", 66" High - 12" Deep

- Standard melamine interior
- Can be ordered with butt doors. Must specify on order.

HOW TO ORDER

✪ To order this item, you must fill out and send an Appliance Template with the order. If an appliance template is not included, the cabinet will be built with an opening that is 16½" high and a width that is 3" less than the overall cabinet width.

- Pricing P-64

NOTES/CAUTION

- On beaded inset face frames, the appliance opening has a flush face frame unless specified otherwise by a drawing.

© Copyright StarMark Cabinetry MARCH 2021

Block 2081 Microwave Diagonal Wall with Drawer

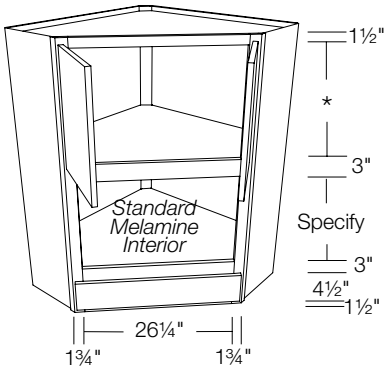

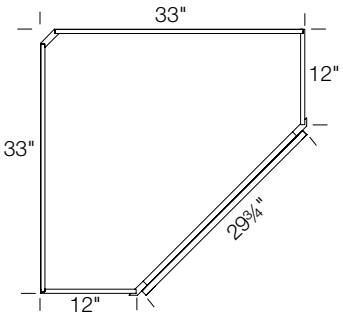

Butt Doors
2MDWDW3342
2MDWDW3345
2MDWDW3348
2MDWDW3351
2MDWDW3354
2MDWDW3357
2MDWDW3360
2MDWDW3363
2MDWDW3366

DESIGN CONSIDERATIONS

42", 45", 48", 51", 54", 57", 60", 63", 66" High - 12" Deep

- Standard melamine interior

HOW TO ORDER

✪ To order this item, you must fill out and send an Appliance Template with the order. If an appliance template is not included, the cabinet will be built with an opening that is 16½" high and a width that is 3" less than the overall cabinet width.

- Pricing P-64

Cabinet Height	Number of Shelves
42", 45"	0
48", 51"	1
54", 57", 60", 63"	2
66"	3

INSTALLATION TIP

Bottom drawer may be restricted by countertops with no-drip edge or bull nose tile.

NOTES/CAUTION

- On beaded inset face frames, the appliance opening has a flush face frame unless specified otherwise by a drawing.

Block 2098 Criss Cross Wine Rack above Doors

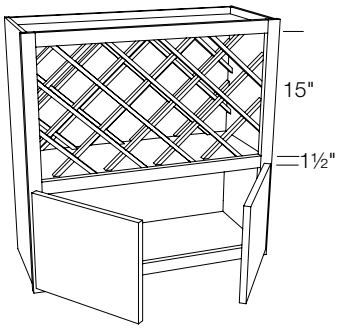

Butt Doors

2XXWSK3030	**2XXWSK3330**	**2XXWSK3630**
2XXWSK3033	**2XXWSK3333**	**2XXWSK3633**
2XXWSK3036	**2XXWSK3336**	**2XXWSK3636**
2XXWSK3039	**2XXWSK3339**	**2XXWSK3639**
2XXWSK3042	**2XXWSK3342**	**2XXWSK3642**
2XXWSK3045	**2XXWSK3345**	**2XXWSK3645**
2XXWSK3048	**2XXWSK3348**	**2XXWSK3648**

DESIGN CONSIDERATIONS

30", 33", 36", 39", 42", 45", 48" High - 12" Deep

- Finished veneer interior
- Ogee edge on wine opening
- When an arched door style is specified on order, square doors are used.

HOW TO ORDER

- Pricing P-65

Cabinet Height	Number of Shelves
30", 33", 36"	0
39", 42"	1
45", 48"	2

Cabinet Width	Bottle Capacity
30"	10
33"	13
36"	13

© Copyright StarMark Cabinetry MARCH 2021

Block 2099 Criss Cross Wine Rack below Doors

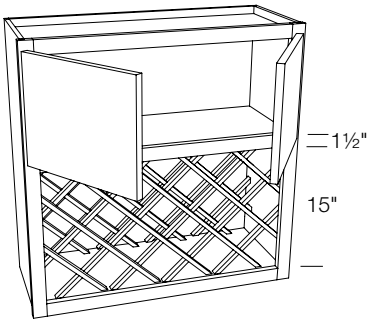

Butt Doors

2SKXXW3030	**2SKXXW3330**	**2SKXXW3630**
2SKXXW3033	**2SKXXW3333**	**2SKXXW3633**
2SKXXW3036	**2SKXXW3336**	**2SKXXW3636**
2SKXXW3039	**2SKXXW3339**	**2SKXXW3639**
2SKXXW3042	**2SKXXW3342**	**2SKXXW3642**
2SKXXW3045	**2SKXXW3345**	**2SKXXW3645**
2SKXXW3048	**2SKXXW3348**	**2SKXXW3648**

DESIGN CONSIDERATIONS

30", 33", 36", 39", 42", 45", 48" High - 12" Deep

- Finished veneer interior
- Ogee edge on wine opening

HOW TO ORDER

- Pricing P-65

Cabinet Height	Number of Shelves
30", 33", 36"	0
39", 42"	1
45", 48"	2

Cabinet Width	Bottle Capacity
30"	10
33"	13
36"	13

Block 2100 Criss Cross Wine Rack

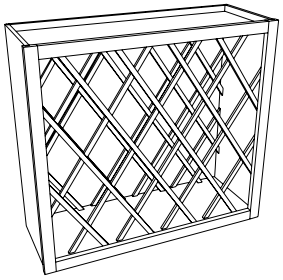

XXW3018	**XXW1830**
	XXW2130
XXW3024	**XXW2430**
	XXW2730
	XXW3030

DESIGN CONSIDERATIONS

18", 24", 30" High - 12" Deep

- Ogee edge on frame opening
- Finished veneer interior

HOW TO ORDER

- Additional sizes are available; use square foot pricing
- Height: 15" minimum, 42" maximum
- Width: 15" minimum, 36" maximum
- Pricing P-66

Cabinet	Bottle Capacity
XXW3018	10
XXW3024	17
XXW1830	10
XXW2130	17
XXW2430	17
XXW2730	24
XXW3030	24

© Copyright StarMark Cabinetry MARCH 2021

Block 2101 Wall Vertical Wine Rack

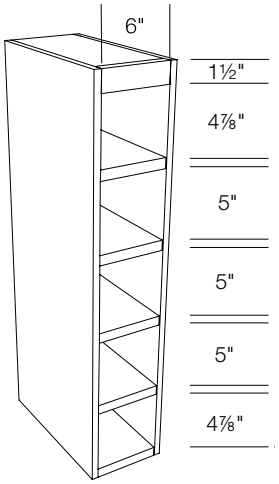

WVWR0630

DESIGN CONSIDERATIONS

30" High - 12" Deep

- Edge banded plywood construction
- Finished veneer interior
- If putting this item on the end of a run, always use a wall end panel or panel box.
- Finished End panels and Flush End panels are not available.

HOW TO ORDER

- Pricing P-66

INSTALLATION TIP

Top rail is 1½" high for ease of moulding installation

Block 2102 Wall Wine Cubes

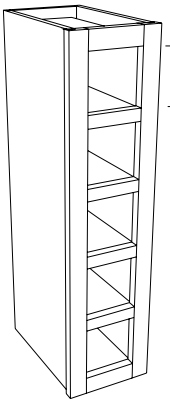

Illustration shows W0730CUB5

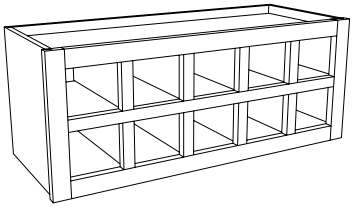

Illustration shows W3012CUB10

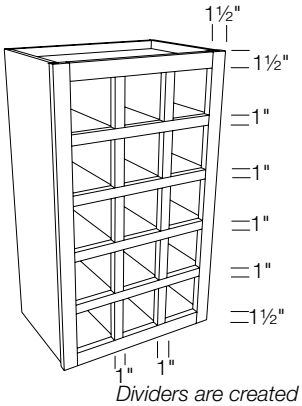

Dividers are created with 1" rails and stiles

Illustration shows W1830CUB15

One column wide
W0712CUB2
W0718CUB3
W0724CUB4
W0730CUB5
W0736CUB6
W0742CUB7
W0748CUB9
W0754CUB10
W0760CUB11

Two columns wide
W1207CUB2
W1212CUB4
W1218CUB6
W1224CUB8
W1230CUB10
W1236CUB12
W1242CUB14
W1248CUB18
W1254CUB20
W1260CUB22

Three columns wide
W1807CUB3
W1812CUB6
W1818CUB9
W1824CUB12

Three columns wide
W1830CUB15
W1836CUB18
W1842CUB21
W1848CUB27
W1854CUB30
W1860CUB33

Four columns wide
W2407CUB4
W2412CUB8
W2418CUB12
W2424CUB16
W2430CUB20
W2436CUB24
W2442CUB28
W2448CUB36
W2454CUB40
W2460CUB44

Five columns wide
W3007CUB5
W3012CUB10
W3018CUB15
W3024CUB20
W3030CUB25
W3036CUB30

Five columns wide
W3042CUB35
W3048CUB45
W3054CUB50
W3060CUB55

Six columns wide
W3607CUB6
W3612CUB12
W3618CUB18
W3624CUB24
W3630CUB30
W3636CUB36
W3642CUB42
W3648CUB54
W3654CUB60
W3660CUB66

Seven columns wide
W4207CUB7
W4212CUB14
W4218CUB21
W4224CUB28
W4230CUB35
W4236CUB42

Nine columns wide
W4807CUB9
W4812CUB18
W4818CUB27
W4824CUB36
W4830CUB45
W4836CUB54

Ten columns wide
W5407CUB10
W5412CUB20
W5418CUB30
W5424CUB40
W5430CUB50
W5436CUB60

Eleven columns wide
W6007CUB11
W6012CUB22
W6018CUB33
W6024CUB44
W6030CUB55
W6036CUB66

DESIGN CONSIDERATIONS

12" Deep

COLUMNS
- Min. width for single column is 7"
- Max. width for 11 columns is 60"

ROWS
- Min. height for a single row is 7"
- Max. height for 11 rows is 60"

OVERALL
- Min. 7"x12" or 12"x7" (2 cubes)
- Max. 36"x60" or 60"x36" (66 cubes)

OPENINGS
- Finished veneer interior
- The size of the cube openings are determined by the overall cabinet size, so from cabinet to cabinet, the opening sizes will range from 4" to 4¾".
- On the same cabinet, to create the best overall appearance, the openings in the outermost columns may be slightly different than other openings on that cabinet.
- Dividers are created with 1" rails and stiles

HOW TO ORDER

- See block 9020, 9030 or 9040 to order Finished, Furniture or Flush finished ends.
- See block 9080 to order depths other than the standard 12" for this item.
- Pricing P-67

© Copyright StarMark Cabinetry MARCH 2021

Block 2103 Wall Wine

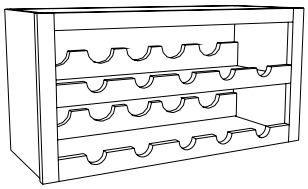

WW3015
WW3615

DESIGN CONSIDERATIONS

15″ High - 12″ Deep

- Ogee edge on frame opening
- Finished veneer interior
- Bottle opening height is 4¾″
- Bottle rest height is 2″
- When installing SGR on job site, bottom rail needs to be increased to 2.625″ HOA.

HOW TO ORDER

- Pricing P-68

Cabinet Width	Bottle Capacity
30″	10
36″	12

Block 2104 Wall Wine Diagonal

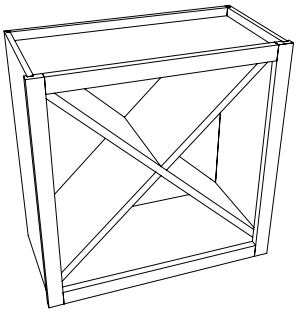

WWDIA1818
WWDIA2424
WWDIA3030

DESIGN CONSIDERATIONS

18″, 24″, 30″ High - 12″ Deep

- Ogee edge on frame opening
- Finished veneer interior
- ¾″ cross members
- Dimensional modifications are allowed as long as width and height are the dimension. For example, 15 X 15 or 21 X 21.

HOW TO ORDER

- Pricing P-68

Block 2110 Wall with Wine Rack Bottom

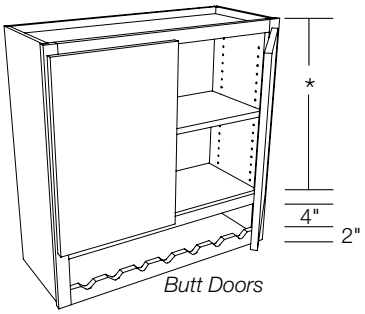

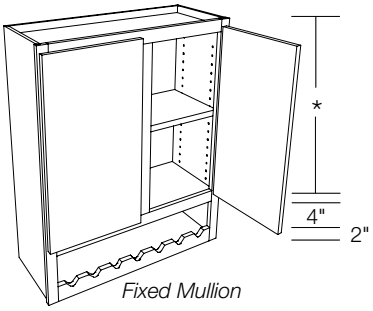

Butt Doors
2WXW2424
2WXW3024
2WXW3624
2WXW4224

2WXW2427
2WXW3027
2WXW3627
2WXW4227

2WXW2430
2WXW3030
2WXW3630
2WXW4230

2WXW2433
2WXW3033
2WXW3633
2WXW4233

Butt Doors
2WXW2436
2WXW3036
2WXW3636
2WXW4236

2WXW2439
2WXW3039
2WXW3639
2WXW4239

2WXW2442
2WXW3042
2WXW3642
2WXW4242

2WXW2445
2WXW3045
2WXW3645
2WXW4245

2WXW2448
2WXW3048
2WXW3648
2WXW4248

Fixed Mullion
WXW3624
WXW4224
WXW4824

WXW3627
WXW4227
WXW4827

WXW3630
WXW4230
WXW4830

WXW3633
WXW4233
WXW4833

Fixed Mullion
WXW3636
WXW4236
WXW4836

WXW3639
WXW4239
WXW4839

WXW3642
WXW4242
WXW4842

WXW3645
WXW4245
WXW4845

WXW3648
WXW4248
WXW4848

DESIGN CONSIDERATIONS

24″, 27″, 30″, 33″, 36″, 39″, 42″, 45″, 48″ High - 12″ Deep

- Ogee edge on lower frame opening
- Adjustable shelves. See chart.
- Finished veneer interior
- When installing SGR on job site, bottom rail needs to be increased to 2.625″ HOA.

HOW TO ORDER

- Pricing P-68-69

Cabinet Height	Height of Opening	Number of Shelves
24″	15″	0
27″	18″	1
30″	21″	1
33″	24″	2
36″	27″	2
39″	30″	2
42″	33″	2
45″	36″	3
48″	39″	3

Cabinet Width	Bottle Capacity
24″	4
30″	5
36″	6
42″	7
48″	8

© Copyright StarMark Cabinetry MARCH 2021

I available in Inset cabinetry

Block 2120 Wall with Wine Rack Top

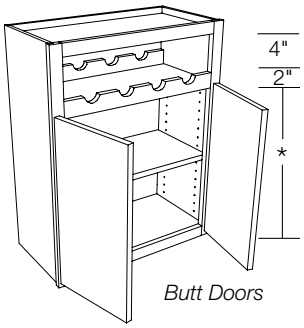

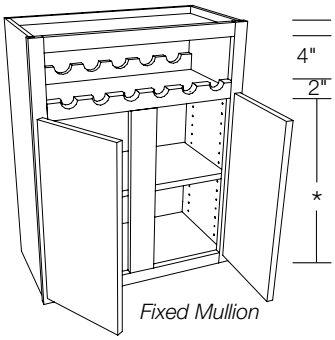

Butt Doors
2W1W2424
2W1W3024
2W1W3624
2W1W4224

2W1W2427
2W1W3027
2W1W3627
2W1W4227

2W1W2430
2W1W3030
2W1W3630
2W1W4230

2W1W2433
2W1W3033
2W1W3633
2W1W4233

2W1W2436
2W1W3036
2W1W3636
2W1W4236

Butt Doors
2W1W2439
2W1W3039
2W1W3639
2W1W4239

2W1W2442
2W1W3042
2W1W3642
2W1W4242

2W1W2445
2W1W3045
2W1W3645
2W1W4245

2W1W2448
2W1W3048
2W1W3648
2W1W4248

Fixed Mullion
W1W3624
W1W4224
W1W4824

W1W3627
W1W4227
W1W4827

W1W3630
W1W4230
W1W4830

W1W3633
W1W4233
W1W4833

W1W3636
W1W4236
W1W4836

Fixed Mullion
W1W3639
W1W4239
W1W4839

W1W3642
W1W4242
W1W4842

W1W3645
W1W4245
W1W4845

W1W3648
W1W4248
W1W4848

DESIGN CONSIDERATIONS

24", 27", 30", 33", 36", 39", 42", 45", 48" High - 12" Deep

- Ogee edge on upper frame opening
- Adjustable shelves. See chart.
- Finished veneer interior
- When an arched door style is specified on order, square doors are used.

HOW TO ORDER

- Pricing P-70

Cabinet Height	Height of Lower Opening	Number of Shelves
24"	15"	0
27"	18"	1
30"	21"	1
33"	24"	2
36"	27"	2
39"	30"	2
42"	33"	2
45"	36"	3
48"	39"	3

Cabinet Width	Bottle Capacity
24"	4
30"	5
36"	6
42"	7
48"	8

Block 2130 Wall with Double Wine Rack Top

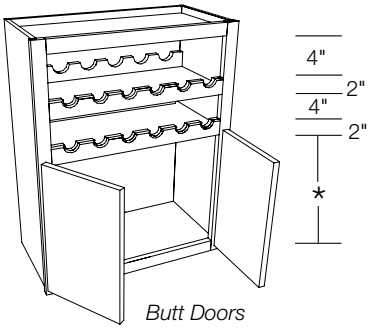

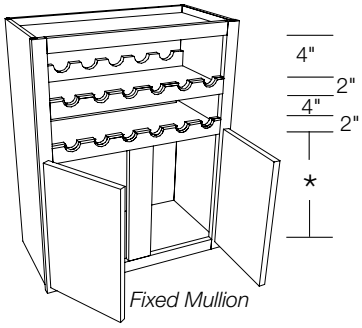

Butt Doors
2W2W2430
2W2W3030
2W2W3630
2W2W4230

2W2W2433
2W2W3033
2W2W3633
2W2W4233

2W2W2436
2W2W3036
2W2W3636
2W2W4236

2W2W2439
2W2W3039
2W2W3639
2W2W4239

Butt Doors
2W2W2442
2W2W3042
2W2W3642
2W2W4242

2W2W2445
2W2W3045
2W2W3645
2W2W4245

2W2W2448
2W2W3048
2W2W3648
2W2W4248

Fixed Mullion
W2W3630
W2W4230
W2W4830

W2W3633
W2W4233
W2W4833

W2W3636
W2W4236
W2W4836

W2W3639
W2W4239
W2W4839

Fixed Mullion
W2W3642
W2W4242
W2W4842

W2W3645
W2W4245
W2W4845

W2W3648
W2W4248
W2W4848

DESIGN CONSIDERATIONS

30", 33", 36", 39", 42", 45", 48" High - 12" Deep

- Ogee edge on upper frame opening
- Adjustable shelves. See chart.
- Finished veneer interior
- When an arched door style is specified on order, square doors are used.

HOW TO ORDER

- Pricing P-71

Cabinet Height	Height of Lower Opening	Number of Shelves
30"	15"	0
33"	18"	1
36"	21"	1
39"	24"	2
42"	27"	2
45"	30"	2
48"	33"	2

Cabinet Width	Bottle Capacity
24"	8
30"	10
36"	12
42"	14
48"	16

© Copyright StarMark Cabinetry MARCH 2021

Block 2140 Wall with Stem Glass Rack

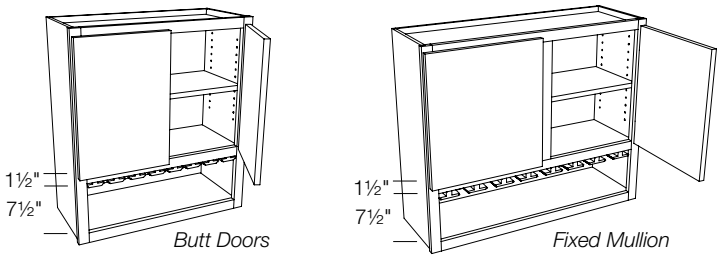

Butt Doors	Fixed Mullion
2WSG2730	
2WSG3030	
2WSG3330	
2WSG3630	**WSG3630**
2WSG3042	
2WSG3342	
2WSG3642	**WSG3642**

DESIGN CONSIDERATIONS

30", 42" High - 12" Deep

- Adjustable ¾" thick plywood shelf. See chart.
- Stemware opening is 7½" high
- The openings are spaced to accommodate stemware with a maximum of a 3¼" diameter bowl
- Finished veneer interior

HOW TO ORDER

- Pricing P-72

Cabinet Height	Door Opening Height	Number of Shelves
30"	18"	1
42"	30"	2

Block 2200 Wall Plate Rack

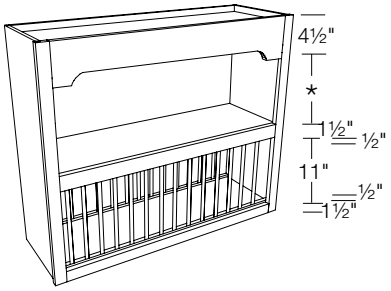

WPR1830	**WPR1839**	**WPR1848**
WPR2130	**WPR2139**	**WPR2148**
WPR2430	**WPR2439**	**WPR2448**
WPR2730	**WPR2739**	**WPR2748**
WPR3030	**WPR3039**	**WPR3048**
WPR3330	**WPR3339**	**WPR3348**
WPR3630	**WPR3639**	**WPR3648**
WPR1833	**WPR1842**	
WPR2133	**WPR2142**	
WPR2433	**WPR2442**	
WPR2733	**WPR2742**	
WPR3033	**WPR3042**	
WPR3333	**WPR3342**	
WPR3633	**WPR3642**	
WPR1836	**WPR1845**	
WPR2136	**WPR2145**	
WPR2436	**WPR2445**	
WPR2736	**WPR2745**	
WPR3036	**WPR3045**	
WPR3336	**WPR3345**	
WPR3636	**WPR3645**	

DESIGN CONSIDERATIONS

30", 33", 36", 39", 42", 45", 48" High - 12" Deep

- Available in Alder, Cherry, Hickory, Maple, Oak and Walnut
- Wood plate dividers
- Clear plate opening is 11"
- Opening height of plate area cannot be modified
- Not available over 36" wide
- Finished veneer interior
- Arch valance is standard

HOW TO ORDER

- Other valances are available. See block 9170 for Valance Top Rail options.
- Pricing P-72

Cabinet Height	Number of Shelves
30", 33",	0
36", 39",	1
42", 45", 48"	2

Cabinet Width	Plate Capacity
18"	6
21"	8
24"	9
27"	11
30"	12
33"	14
36"	15

INSTALLATION TIP

Front rack is removable for cleaning

© Copyright StarMark Cabinetry MARCH 2021

Block 2201 Wall Plate Rack

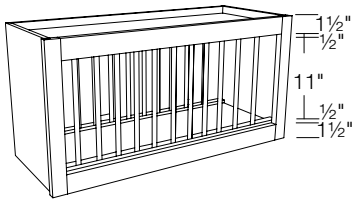

WPR1815
WPR2115
WPR2415
WPR2715
WPR3015
WPR3315
WPR3615

DESIGN CONSIDERATIONS

15″ High - 12″ Deep

- Available in Alder, Cherry, Hickory, Maple, Oak and Walnut
- Wood plate dividers
- Clear plate opening is 11″
- Opening height cannot be modified
- Not available over 36″ wide
- Finished veneer interior

HOW TO ORDER

- Pricing P-72

Cabinet Width	Plate Capacity
18″	6
21″	8
24″	9
27″	11
30″	12
33″	14
36″	15

INSTALLATION TIP

Front rack is removable for cleaning

Block 2299 Wall Message Center

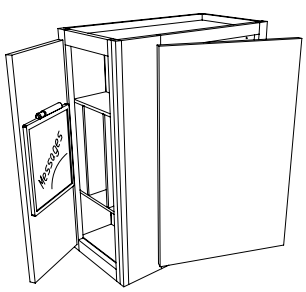

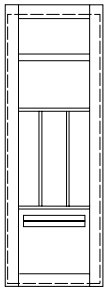

Side View

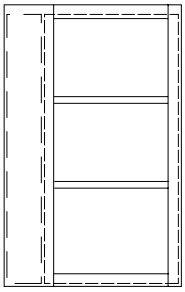

Front View

Modern Overlay Door Shown

Optional Filler Cap Shown

WMSG1830
WMSG2130
WMSG2430

WMSG1833
WMSG2133
WMSG2433

WMSG1836
WMSG2136
WMSG2436

WMSG1839
WMSG2139
WMSG2439

WMSG1842
WMSG2142
WMSG2442

WMSG1845
WMSG2145
WMSG2445

WMSG1848
WMSG2148
WMSG2448

DESIGN CONSIDERATIONS

30″, 33″, 36″, 39″, 42″, 45″, 48″ High - 12″ Deep

- 30″, 33″, 36″ have 2 adjustable shelves in front opening.
- 39″, 42″, 45″, 48″ have 3 adjustable shelves in front opening.
- 39″, 42″, 45″, 48″ have 1 adjustable shelf in message area.
- Envelope storage area
- Hanging key storage area
- Dry erase board for message area door sent loose for field installation
- Standard melamine interior in front opening and in message area
- Mortise and tenon doors greater than 42″ high will have a center rail.

HOW TO ORDER

- Specify **L** or **R** hinging, Envelope and Key storage on same side as hinge.
- Specify flutes (block 9140) or Filler Cap (block 11340) to cover wide stile. We recommend a 3″ wide Filler Cap for traditional overlay door styles and a 4¼″ wide (6″ wide reduced width to 4¼″) Filler Cap for Modern overlay door styles.
- Pricing P-73

Cabinet Width	Front Door Opening Width
18″	10½″
21″	13½″
24″	16½″

© Copyright StarMark Cabinetry MARCH 2021

ORGANIZERS

For blocks
2300
2305
2310
2315
2330
2340

DESIGN CONSIDERATIONS
- Organizer portion of the cabinet will receive a finished veneer interior
- Organizer dividers for 30" wide cabinets:

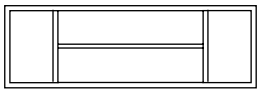

- Main cabinet opening will receive a birch melamine interior
- Organizer dividers for cabinets wider than 30":

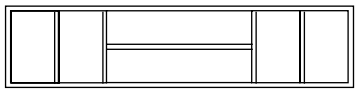

Block 2300 Organizer

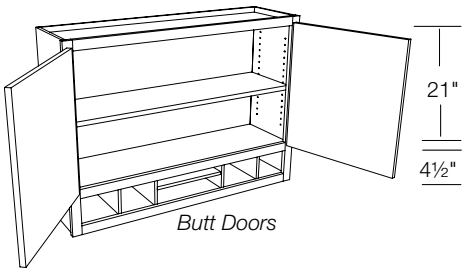

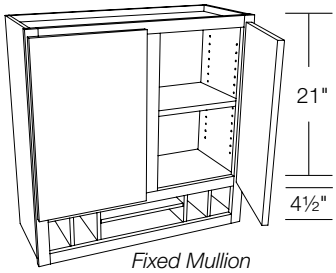

DESIGN CONSIDERATIONS
30" High - 12" Deep
- 1 adjustable shelf
- Ogee edge on organizer opening

HOW TO ORDER
- Pricing P-73

Butt Doors
2XW3030
2XW3630
2XW4230

Fixed Mullion
XW4230
XW4830

Block 2305 Organizer

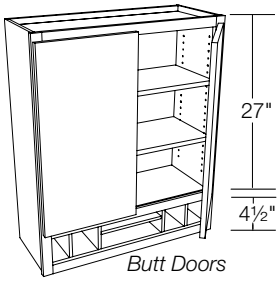

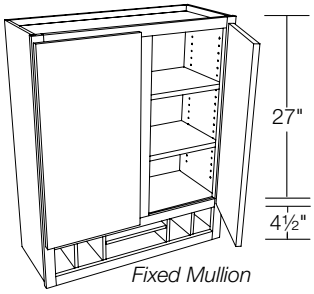

DESIGN CONSIDERATIONS
36" High - 12" Deep
- 2 adjustable shelves
- Ogee edge on organizer opening

HOW TO ORDER
- Pricing P-73

Butt Doors
2XW3036
2XW3636
2XW4236

Fixed Mullion
XW3036
XW3636
XW4236
XW4836

Block 2310 Organizer with Flip Down Header

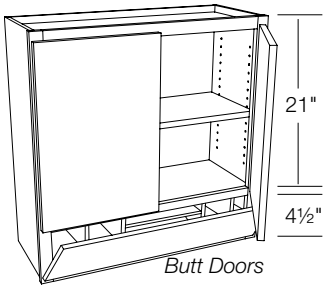

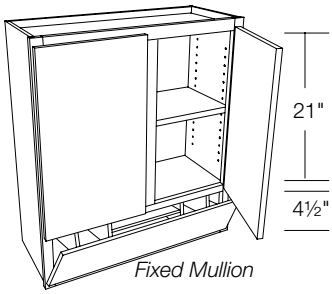

DESIGN CONSIDERATIONS
30" High - 12" Deep
- 1 adjustable shelf
- Organizer behind flip down header
- When a five-piece drawer header is specified with a cope and stick door style (non-mitered), the drawer header is built with 1⅞" rails.

HOW TO ORDER
- Pricing P-74

NOTES/CAUTION
- Inset concealed hinges not available on flip down header.

Butt Doors
2XWF3030
2XWF3630
2XWF4230

Fixed Mullion
XWF3630
XWF4230

© Copyright StarMark Cabinetry MARCH 2021

ORGANIZERS

For blocks

2300	**2315**
2305	**2330**
2310	**2340**

DESIGN CONSIDERATIONS

- Organizer portion of the cabinet will receive a finished veneer interior
- Organizer dividers for 30" wide cabinets:

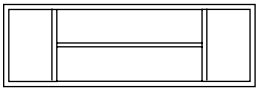

- Main cabinet opening will receive a birch melamine interior
- Organizer dividers for cabinets wider than 30":

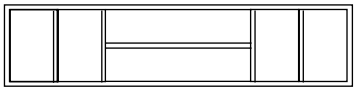

Block 2315 Organizer with Flip Down Header

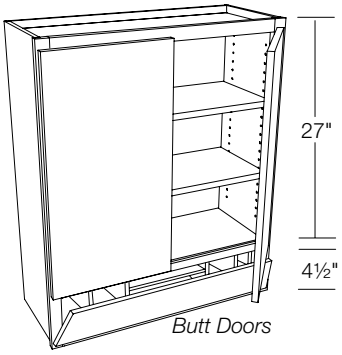

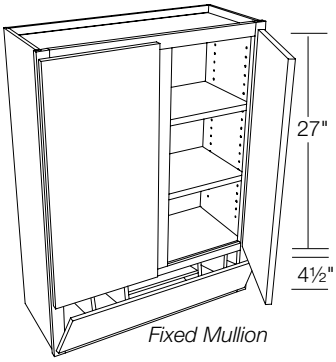

Butt Doors
2XWF3036
2XWF3636

Fixed Mullion
XWF3636

DESIGN CONSIDERATIONS

36" High - 12" Deep

- 2 adjustable shelves
- Organizer behind flip down header
- If you are specifying a Modern overlay door style, note that the bottom of the doors will not align with a standard 30" high cabinet placed adjacent to it.
- When a five-piece drawer header is specified with a cope and stick door style (non-mitered), the drawer header is built with 1⅞" rails.

HOW TO ORDER

- Pricing P-74

NOTES/CAUTION

- Inset concealed hinges not available on flip down header.

Block 2330 Organizer with Book Shelf

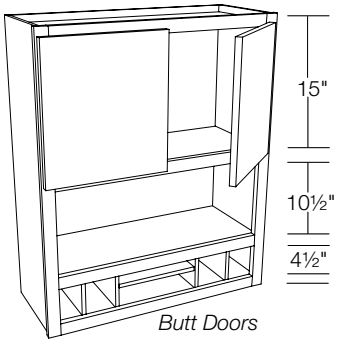

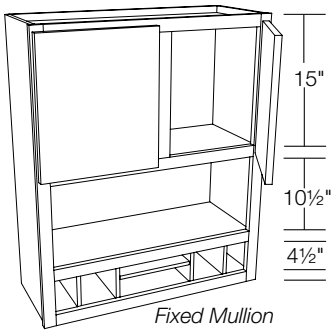

Butt Doors
2XCW3036
2XCW3636
2XCW4236

Fixed Mullion
XCW3636
XCW4236
XCW4836

DESIGN CONSIDERATIONS

36" High - 12" Deep

- Ogee edge on frame and organizer opening
- Finished veneer interior

HOW TO ORDER

- Pricing P-74

Block 2340 Organizer with Book Shelf and Flip Down Header

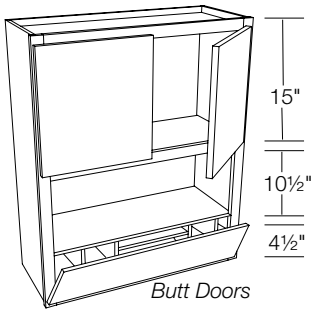

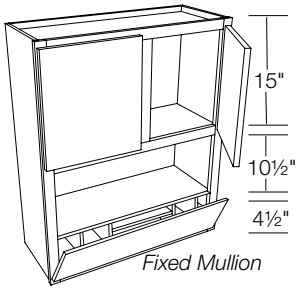

Butt Doors
2XCWF3036
2XCWF3636
2XCWF4236

Fixed Mullion
XCWF3636
XCWF4236

DESIGN CONSIDERATIONS

36" High - 12" Deep

- Organizer behind flip down header
- Ogee edge on frame opening
- Finished veneer interior
- When a five-piece drawer header is specified with a cope and stick door style (non-mitered), the drawer header is built with 1⅞" rails.

HOW TO ORDER

- Pricing P-74

NOTES/CAUTION

- Inset concealed hinges not available on flip down header.

© Copyright StarMark Cabinetry MARCH 2021

CURVED IN WALL

CURVED CABINETS CANNOT BE PLACED ON RUSH SCHEDULE

Dimensions apply for blocks 2400, 2420

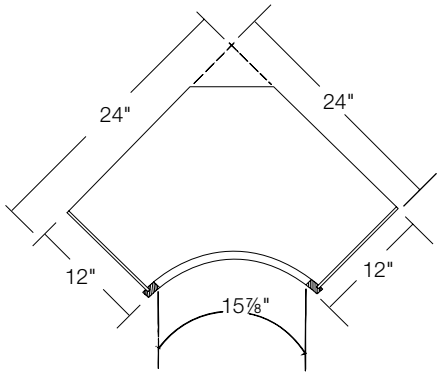

Block 2400* Curved In Wall

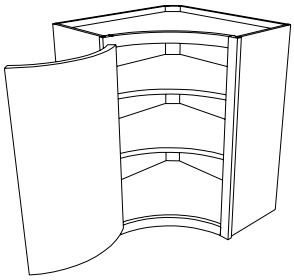

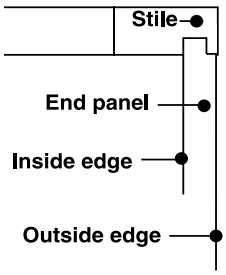

CIW2430 **CIW2436** **CIW2442**

DESIGN CONSIDERATIONS

30", 36", 42" High - 12" Deep - 12" Radius

- 30", 36" have 2 adjustable shelves
- 42" has 3 adjustable shelves
- Call Technical assistance at 800.551.3404 for modifications.
- End panels are shifted to outside frame edge, eliminating ¼" reveal. End panels are not flush. See detail.
- See block 12430 for curved moulding.

HOW TO ORDER

- Specify **L** or **R** hinging
- Available in Accord, Aero, Alite, Breckenridge, Georgetown, Monroe, Tempo and Tudor
- Not available in Alder and Rustic Alder
- Cannot be placed on rush schedule
- Pricing P-75

* On select door styles only

Block 2420 Curved In Wall with Open Shelves

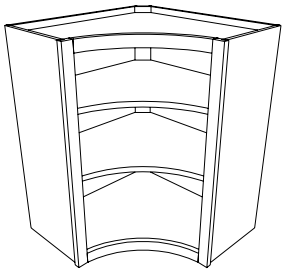

CIXW2430 **CIXW2436** **CIXW2442**

DESIGN CONSIDERATIONS

30", 36", 42" High - 12" Deep - 12" Radius

- 30", 36" have 2 adjustable shelves
- 42" has 3 adjustable shelves
- Call Technical assistance at 800.551.3404 for modifications.
- Finished veneer interior
- See block 12430 for curved moulding.

HOW TO ORDER

- Cannot be placed on rush schedule
- Not available in Alder and Rustic Alder
- Pricing P-75

© Copyright StarMark Cabinetry MARCH 2021

CURVED OUT WALL

CURVED CABINETS CANNOT BE PLACED ON RUSH SCHEDULE

Dimensions apply for blocks 2430, 2440

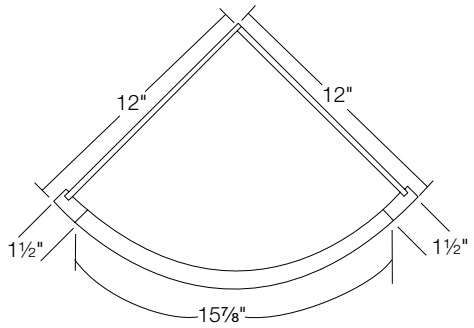

Block 2430* Curved Out Wall

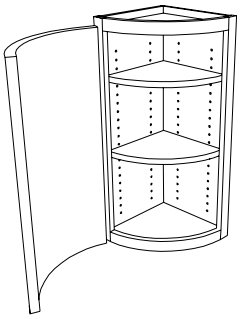

COW1230 **COW1242**

COW1236 **COW1248**

DESIGN CONSIDERATIONS

30", 36", 42", 48" High - 12" Deep - 12" Radius

- 30", 36" have 2 adjustable shelves
- 42", 48" have 3 adjustable shelves
- Call Technical assistance at 800.551.3404 for modifications.
- Back panels are ½" veneer core plywood
- Mortise and tenon doors greater than 42" high will have a center rail.
- See blocks 12440 and 12480 for curved moulding.

HOW TO ORDER

- Specify **L** or **R** hinging
- Available in Accord, Aero, Alite, Breckenridge, Georgetown, Monroe, Tempo and Tudor
- Not available in Alder and Rustic Alder
- Cannot be placed on rush schedule
- Pricing P-75

* On select door styles only

Block 2440 Curved Out Wall with Open Shelves

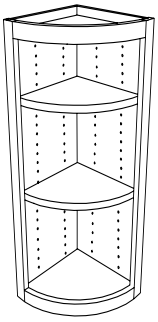

2 shelves

COXW1230

COXW1236

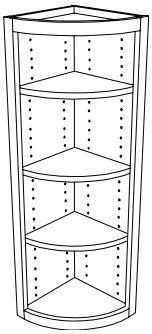

3 shelves

COXW1242

COXW1248

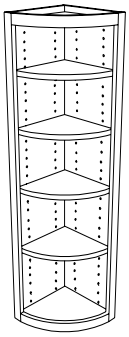

4 shelves

COXW1254

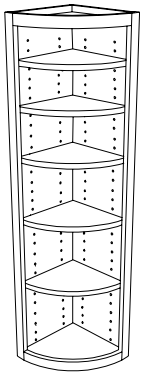

5 shelves

COXW1260

DESIGN CONSIDERATIONS

30", 36", 42", 48", 54", 60" High
12" Deep - 12" Radius

- ¾" solid adjustable shelves
- Call Technical assistance at 800.551.3404 for modifications.
- Finished veneer interior
- Back panels are ½" veneer core plywood
- See blocks 12440 and 12480 for curved moulding.

HOW TO ORDER

- Cannot be placed on rush schedule
- Not available in Alder and Rustic Alder
- Pricing P-76

© Copyright StarMark Cabinetry MARCH 2021

Block 2470 Angle Wall

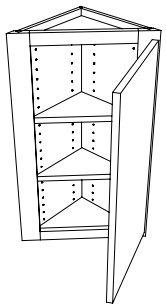

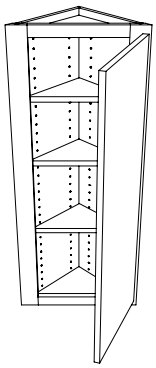

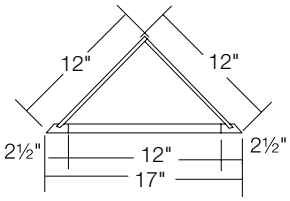

AW1224
AW1227
AW1230
AW1233
AW1236
AW1239

AW1242
AW1245
AW1248

DESIGN CONSIDERATIONS

24", 27", 30", 33", 36", 39", 42", 45", 48" High - 12" Deep

- Adjustable shelves. See chart.
- Back panels are ½" veneer core plywood
- Mortise and tenon doors greater than 42" high will have a center rail.

HOW TO ORDER

- Specify **L** or **R** hinging
- Certain angle restrictions may apply when modifying this cabinet.
- Pricing P-77

Cabinet Height	Number of Shelves
24"	1
27", 30", 33", 36"	2
39", 42", 45", 48"	3

NOTES/CAUTION

- Inset concealed hinges not available

Block 2475 Wall Angled Corner

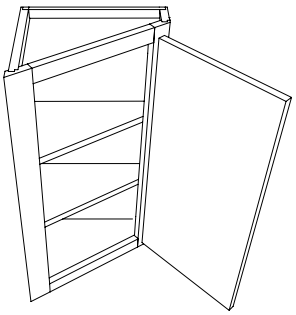

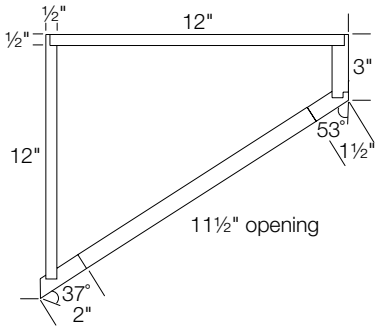

Left
WAC1224L
WAC1227L
WAC1230L
WAC1233L
WAC1236L
WAC1239L
WAC1242L
WAC1245L
WAC1248L

Right
WAC1224R
WAC1227R
WAC1230R
WAC1233R
WAC1236R
WAC1239R
WAC1242R
WAC1245R
WAC1248R

DESIGN CONSIDERATIONS

24", 27", 30", 33", 36", 39", 42", 45", 48" High - 12" Deep

- Adjustable shelves - see chart.
- 3" end panel is flush and finished
- Mortise and tenon doors greater than 42" high will have a center rail.

HOW TO ORDER

- Nomenclature indicates end of run: L for left, R for right.
- Left end of run is hinged left, right end of run is hinged right.
- Right end of run illustrated
- Certain angle restrictions may apply when modifying this cabinet.
- Pricing P-77

Cabinet Height	Number of Shelves
24"	1
27", 30", 33", 36"	2
39", 42", 45", 48"	3

NOTES/CAUTION

- Designed to work with Inset concealed hinges

© Copyright StarMark Cabinetry MARCH 2021

Block 2480 Angle End Wall

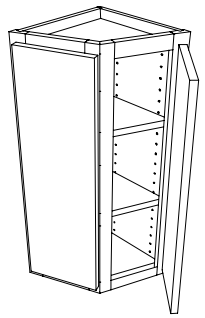

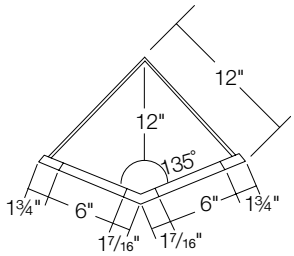

AEW1224
AEW1227
AEW1230
AEW1233
AEW1236
AEW1239
AEW1242
AEW1245
AEW1248

DESIGN CONSIDERATIONS

24", 27", 30", 33", 36", 39", 42", 45", 48" High - 12" Deep

- Adjustable shelves - see chart.
- Back panels are ½" veneer core plywood
- Mortise and tenon doors greater than 42" high will have a center rail.

HOW TO ORDER

- Certain angle restrictions may apply when modifying this cabinet.
- Pricing P-77

Cabinet Height	Number of Shelves
24"	1
27", 30", 33", 36"	2
39", 42", 45", 48"	3

Block 2490 Wall Z Door

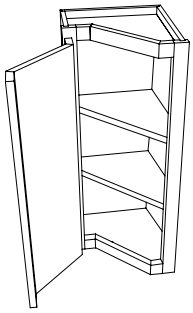

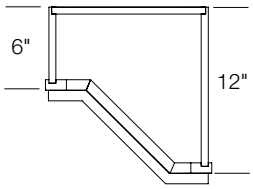

Left	Right
WZ1224L	**WZ1224R**
WZ1227L	**WZ1227R**
WZ1230L	**WZ1230R**
WZ1233L	**WZ1233R**
WZ1236L	**WZ1236R**
WZ1239L	**WZ1239R**
WZ1242L	**WZ1242R**
WZ1245L	**WZ1245R**
WZ1248L	**WZ1248R**

DESIGN CONSIDERATIONS

24", 27", 30", 33", 36", 39", 42", 45", 48" High - 12" Deep

- Adjustable shelves - see chart.
- Call Technical assistance at 800.551.3404 for modifications.
- Mortise and tenon doors greater than 42" high will have a center rail.
- Not available with Finger Routes or Bevel Pulls.
- Not available with any Mullion or Insert door modifications.

HOW TO ORDER

- Nomenclature indicates end of run: L for left, R for right.
- Left end of run is hinged left, right end of run is hinged right.
- Illustration shows this cabinet at the left end of a run
- Not available in Tabor door style
- Pricing P-78

Cabinet Height	Number of Shelves
24"	1
27", 30", 33", 36"	2
39", 42", 45", 48"	3

© Copyright StarMark Cabinetry MARCH 2021

Hood Installation

For blocks
2500-2670

To determine proper installation height of hood, consult the hood and appliance manufacturer specifications, as well as your local codes.

Block 2500 Tapered Wood Hood

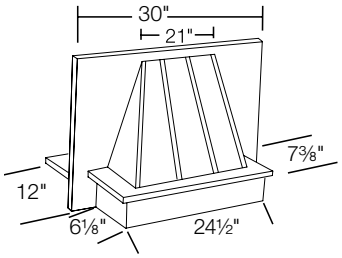

TH3024

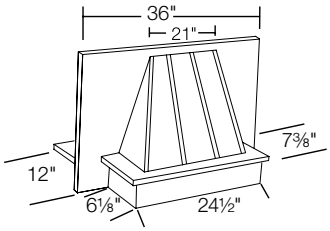

TH3624

DESIGN CONSIDERATIONS

24″ High

- Available in Alder, Cherry, Hickory, Maple and Oak
- Front only - not for use in peninsula or on end of run
- Width of actual hood is same for both sizes
- No modifications.
- Liner is included

HOW TO ORDER

- Order blower separately - see block 2680
- Pricing P-78

INSTALLATION TIP

The Liner is shipped separately to be installed on the job site. If a blower is ordered, it will also need to be installed on the job site.

Block 2530 Wood Hood

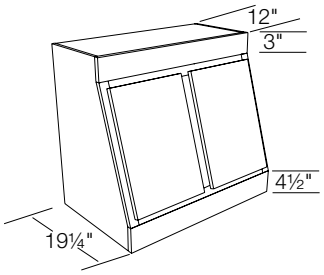

H3024
H3624

To determine proper installation height of hood, consult the hood and appliance manufacturer specifications, as well as your local codes.

DESIGN CONSIDERATIONS

24″ High - 19¼″ Deep

- Door opening height 15″
- Doors are operational
- Doors will not clear a soffit that is more than 24″ deep
- No floor in liner area
- Call Technical assistance at 800.551.3404 for modifications.

HOW TO ORDER

- Order liner and blower separately - see block 2680
- Pricing P-78

INSTALLATION TIP

The Liner/Blower is shipped separately to be installed on the job site.

NOTES/CAUTION

- Inset concealed hinges not available

© Copyright StarMark Cabinetry MARCH 2021

Hood Installation

For blocks 2500-2670

To determine proper installation height of hood, consult the hood and appliance manufacturer specifications, as well as your local codes.

Block 2535 Wood Hood

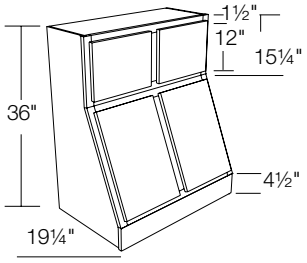

H3036

DESIGN CONSIDERATIONS

36" High - 19¼" Deep

- To be used with 42" high wall cabinet
- Door opening height 15"
- Doors are operational
- Doors will not clear a soffit that is more than 24" deep
- When arched door style is specified for order, arch door on top doors only
- No floor in liner area
- Call Technical assistance at 800.551.3404 for modifications.

HOW TO ORDER

- Order liner and blower separately - see block 2680
- Pricing P-78

INSTALLATION TIP

The Liner/Blower is shipped separately to be installed on the job site.

NOTES/CAUTION

- Inset concealed hinges not available

Block 2600 Chimney Hood with Straight Valance

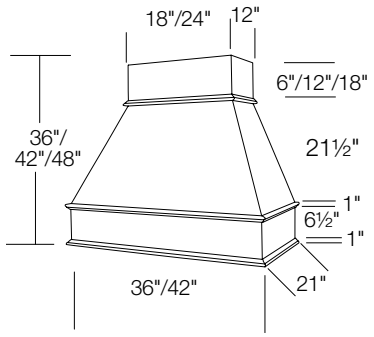

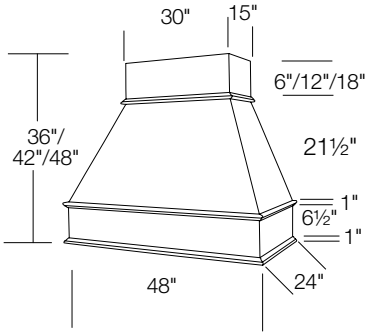

CHSVL3636	**CHSVL4236**	**CHSVL4836**
CHSVL3642	**CHSVL4242**	**CHSVL4842**
CHSVL3648	**CHSVL4248**	**CHSVL4848**

DESIGN CONSIDERATIONS

36", 42", 48" High

- Optional moulding may be field applied to front valance.
- Onlays may be field applied to the valance.
- Dimensions do not include moulding projections which adds 1⅛" per side and front.
- Straight chimney area increases with the height; tapered area remains the same
- Interior dimension is 1½" less than width
- Interior depth is 19¾" for 36" and 42" wide
- Interior depth is 22¾" for 48" wide
- Call Technical assistance at 800.551.3404 for modifications.

HOW TO ORDER

- Order liner and blower separately - see block 2680
- Pricing P-79

INSTALLATION TIP

The Liner/Blower is shipped separately to be installed on the job site.

© Copyright StarMark Cabinetry MARCH 2021

Block 2652 Mantel Hood

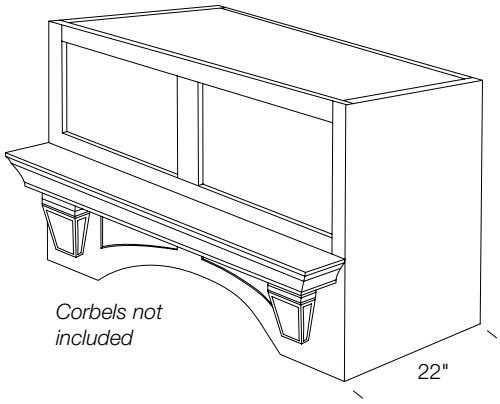

30″ High

Rolled	Scooped	Flat
MH4830R	MH4830S	MH4830F
MH5430R	MH5430S	MH5430F
MH6030R	MH6030S	MH6030F

42″ High

Rolled	Scooped	Flat
MH4842R	MH4842S	MH4842F
MH5442R	MH5442S	MH5442F
MH6042R	MH6042S	MH6042F

36″ High

Rolled	Scooped	Flat
MH4836R	MH4836S	MH4836F
MH5436R	MH5436S	MH5436F
MH6036R	MH6036S	MH6036F

48″ High

Rolled	Scooped	Flat
MH4848R	MH4848S	MH4848F
MH5448R	MH5448S	MH5448F
MH6048R	MH6048S	MH6048F

DESIGN CONSIDERATIONS

30″, 36″, 42″, 48″ High - 30¼″ Deep

- The Mantel Hood is designed to mount between two cabinets.
- Mantel depth 8¼″
- Choose Rolled, Scooped or Flat profile
- Furniture end panels
- Accepts medium corbels, attached below mantel.
- Call Technical assistance at 800.551.3404 for modifications.
- ADIP front

HOW TO ORDER

- Nomenclature indicates width by height.
- Order corbels separately. They are shipped loose. Select a medium corbel from the list below.
- Order blowers, fans and liners directly from Stanisci Designs. www.wood-hood.com, 248-572-6880
- Pricing P-79

INSTALLATION TIP

- The upper panel removes for easier installation.

Corbel Nomenclature	Block #
BRMWRIGHT	13370
Any Art for Everyday corbel less than 4½″ deep and less than 10″ in height	15100

Block 2653 Mantel Hood Square

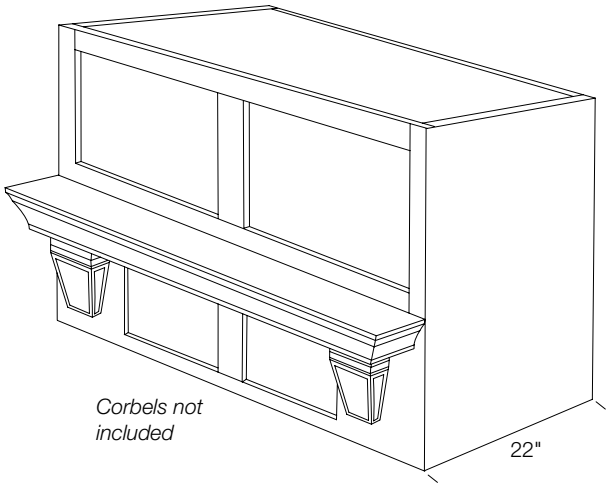

30″ High

Rolled	Scooped	Flat
MHS4830R	MHS4830S	MHS4830F
MHS5430R	MHS5430S	MHS5430F
MHS6030R	MHS6030S	MHS6030F

42″ High

Rolled	Scooped	Flat
MHS4842R	MHS4842S	MHS4842F
MHS5442R	MHS5442S	MHS5442F
MHS6042R	MHS6042S	MHS6042F

36″ High

Rolled	Scooped	Flat
MHS4836R	MHS4836S	MHS4836F
MHS5436R	MHS5436S	MHS5436F
MHS6036R	MHS6036S	MHS6036F

48″ High

Rolled	Scooped	Flat
MHS4848R	MHS4848S	MHS4848F
MHS5448R	MHS5448S	MHS5448F
MHS6048R	MHS6048S	MHS6048F

DESIGN CONSIDERATIONS

30″, 36″, 42″, 48″ High - 30¼″ Deep

- The Mantel Hood is designed to mount between two cabinets.
- Mantel depth 8¼″
- Choose Rolled, Scooped or Flat profile
- Furniture end panels
- Accepts medium corbels, attached below mantel.
- Call Technical assistance at 800.551.3404 for modifications.
- ADIP front

HOW TO ORDER

- Nomenclature indicates width by height.
- Order corbels separately. They are shipped loose. Select a medium corbel from the list below.
- Order blowers, fans and liners directly from Stanisci Designs. www.wood-hood.com, 248-572-6880
- Pricing P-80

INSTALLATION TIP

- The upper panel removes for easier installation.

Corbel Nomenclature	Block #
BRMWRIGHT	13370
Any Art for Everyday corbel less than 4½″ deep and less than 10″ in height	15100

© Copyright StarMark Cabinetry MARCH 2021

Block 2654 Mantel Range Hood

NEW! I

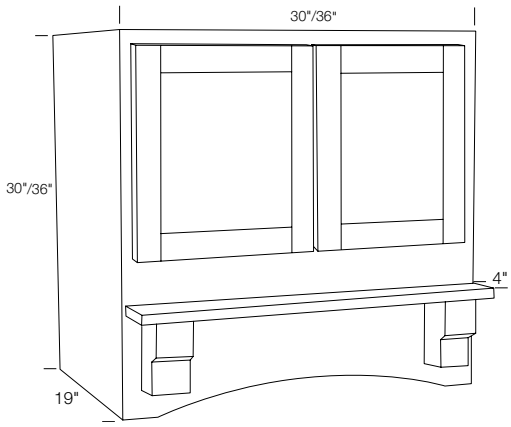

DESIGN CONSIDERATIONS

30", 36" High - 19" Deep

- Available in Cherry, Maple and Oak
- Built with doors that match the door style specified on the cabinetry order.
- Includes a silver metallic powder coated liner

HOW TO ORDER

- Nomenclature indicates width by height.
- See Block 2681 for blower options.
- Cannot be placed on rush schedule.
- Pricing P-80

30" High
MRH3030
MRH3630

36" High
MRH3036
MRH3636

© Copyright StarMark Cabinetry MARCH 2021

Block 2655 Hearth Hood Style A

Five components are acknowledged, shipped and invoiced:
1. Left tower (WSTA)
2. Right tower (WSTA)
3. ADIP with arched valance
4. Mantel (MTL)
5. Hearth panel (HP)

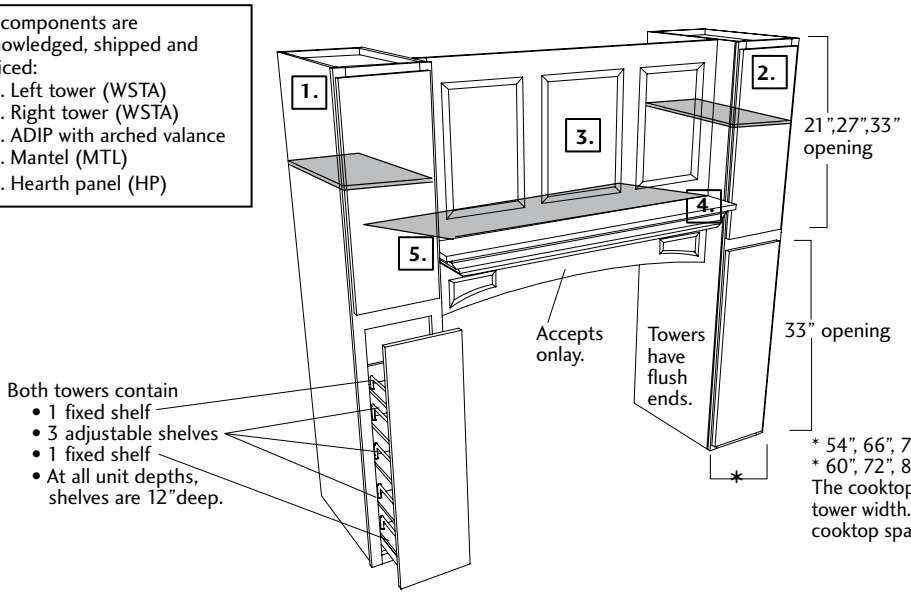

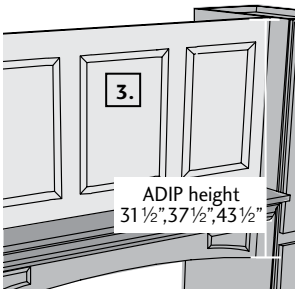

* 54", 66", 78", 90" wide units have 9" wide towers.
* 60", 72", 84", 96" wide units have 12" wide towers.
The cooktop space will equal the unit width minus twice the tower width. For example, an 84" wide hearth will have a cooktop space of 60": 84 - (12*2) = 60.

DESIGN CONSIDERATIONS

60", 66", 72" High - 21" Deep
- 18" and 24" depths are available at no charge
- Towers have flush finished ends
- 60" high has one adjustable shelf in the upper tower, illustrated above
- 66", 72" high has two adjustable shelves in the upper tower
- Pullout shelves in lower tower units are wood with chrome accents. They extend fully.
- Arched valance can accept an onlay.
- Only square ADIPs are available.
- The ADIP profile will be scooped, rolled or flat, whichever best matches the door profile. Profiles are illustrated below.
- Soft close hinges are only available on upper doors.

HOW TO ORDER

- Nomenclature indicates width by height.
- Available in all species and door styles, except Aero, Monroe, Tabor and Tempo.
- Specify depth.
- Order keys or onlays separately. They are shipped loose.
- Order blowers and liner separately.
- Pricing P-81

INSTALLATION TIP

Instructions are posted on OneTouch, in Installation and Care.

ADIP PROFILES

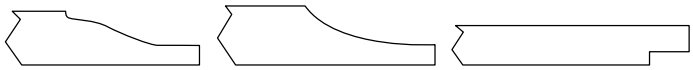

Rolled Scooped Flat

NOTES/CAUTION

- 9" wide towers not available in inset.

HHOODA5460	**HHOODA5466**	**HHOODA5472**
HHOODA6060	**HHOODA6066**	**HHOODA6072**
HHOODA6660	**HHOODA6666**	**HHOODA6672**
HHOODA7260	**HHOODA7266**	**HHOODA7272**
HHOODA7860	**HHOODA7866**	**HHOODA7872**
HHOODA8460	**HHOODA8466**	**HHOODA8472**
HHOODA9060	**HHOODA9066**	**HHOODA9072**
HHOODA9660	**HHOODA9666**	**HHOODA9672**

© Copyright StarMark Cabinetry MARCH 2021

Block 2660 Hearth Hood Style B

Five components are acknowledged, shipped and invoiced:
1. Left tower (WSTB)
2. Right tower (WSTB)
3. ADIP with arched valance
4. Mantel (MTL)
5. Hearth panel (HP)

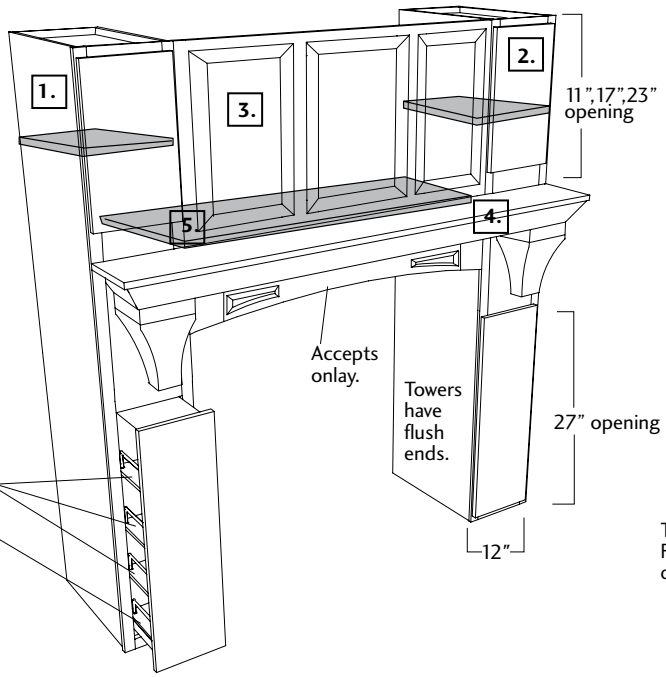

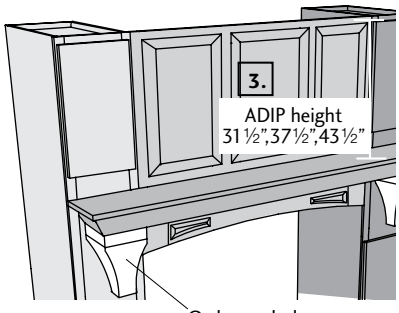

The cooktop space will equal the unit width minus 24. For example, a 94" wide hearth will have a cooktop space of 72": 96 - 24 = 72.

DESIGN CONSIDERATIONS

60", 66", 72" High - 21" Deep
- 18" and 24" depths are available at no charge
- Towers have flush finished ends and are 12" wide.
- 66" and 72" high units have one adjustable shelf in the upper tower
- Pullout shelves in lower tower units are wood with chrome accents. They extend fully.
- Arched valance can accept an onlay.
- Only square ADIPs are available.
- The ADIP profile will be scooped, rolled or flat, whichever best matches the door profile. Profiles are illustrated below.
- Soft close hinges are only available on upper doors.
- See HelpZone for information on corbel placement.

HOW TO ORDER

- Nomenclature indicates width by height.
- Available in all species and door styles, except Aero, Monroe, Tabor and Tempo.
- Specify depth.
- Order keys or onlays separately. They are shipped loose.
- Order corbels separately. They are shipped loose. Select a medium corbel from the list below.
- Order blowers and liner separately.
- Pricing P-82

Corbel Nomenclature	Block #
BRMWRIGHT	13370
Any Art for Everyday corbel less than 4½" deep and less than 10" in height	15100

INSTALLATION TIP

Instructions are posted on OneTouch, in Installation and Care.

ADIP PROFILES

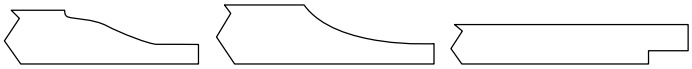

Rolled Scooped Flat

HHOODB6060	**HHOODB6066**	**HHOODB6072**
HHOODB7260	**HHOODB7266**	**HHOODB7272**
HHOODB8460	**HHOODB8466**	**HHOODB8472**
HHOODB9660	**HHOODB9666**	**HHOODB9672**

© Copyright StarMark Cabinetry MARCH 2021

ADIP PROFILES

For block 2670

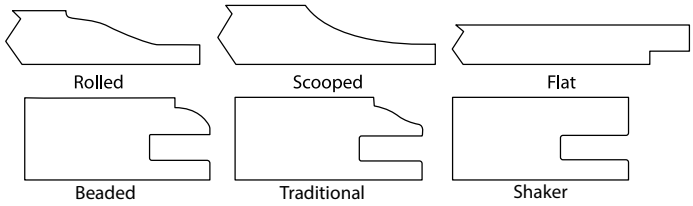

There is an extended lead time for Stanisci wood hoods. See your Cycle Ship for more information. We distribute Cycle Ship approximately every six weeks.

- Stanisci hoods are available in Alder, Rustic Alder, Cherry, Hickory, Maple, Red Oak and Walnut. All other species must be quoted. Verify availability of specie to be quoted.
- To determine proper installation height of hood, consult the hood and appliance manufacturer specifications, as well as your local codes.

Block 2670 Stanisci Wood Hood A-Series

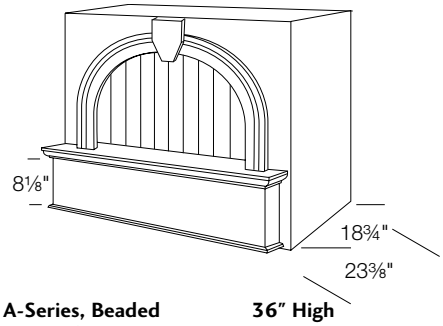

A-Series, Beaded	36″ High	42″ High
30″ High	A3336	A3342
A3330	A3936	A3942
A3930	A4536	A4542
A4530	A5136	A5142
A5130	A5736	A5742
A5730	A6336	A6342
A6330		

DESIGN CONSIDERATIONS

30″, 36″, 42″ High - 23⅜″ Deep

- The A-Series hood is designed to mount between two cabinets
- End panels are finished
- Shelf depth is 8½″
- Accepts onlays
- Optional corbels can be installed below the hood
- The recess in the display niche allows for 3″ puck lights
- Call Technical assistance at 800.551.3404 for modifications.

HOW TO ORDER

- Nomenclature indicates width by height.
- Order corbels, onlays and other decorative accents separately
- Order blowers, fans and liners directly from Stanisci Designs. www.wood-hood.com, 248-572-6880
- Cannot be placed on rush schedule.
- Pricing P-83

INSTALLATION TIP

- The beaded panel removes for easier installation.

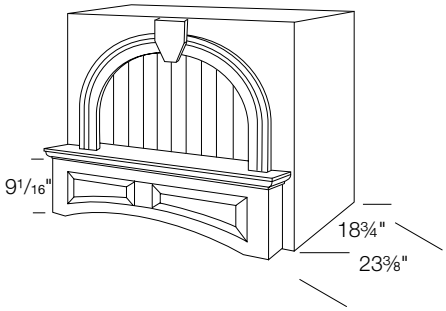

A-Series, 30″ High

Rolled	Scooped	Flat
ARA3330R	ARA3330S	ARA3330F
ARA3930R	ARA3930S	ARA3930F
ARA4530R	ARA4530S	ARA4530F
ARA5130R	ARA5130S	ARA5130F
ARA5730R	ARA5730S	ARA5730F
ARA6330R	ARA6330S	ARA6330F

A-Series, 42″ High

Rolled	Scooped	Flat
ARA3342R	ARA3342S	ARA3342F
ARA3942R	ARA3942S	ARA3942F
ARA4542R	ARA4542S	ARA4542F
ARA5142R	ARA5142S	ARA5142F
ARA5742R	ARA5742S	ARA5742F
ARA6342R	ARA6342S	ARA6342F

A-Series, 36″ High

Rolled	Scooped	Flat
ARA3336R	ARA3336S	ARA3336F
ARA3936R	ARA3936S	ARA3936F
ARA4536R	ARA4536S	ARA4536F
ARA5136R	ARA5136S	ARA5136F
ARA5736R	ARA5736S	ARA5736F
ARA6336R	ARA6336S	ARA6336F

DESIGN CONSIDERATIONS

30″, 36″, 42″ High - 23⅜″ Deep

- The A-Series hood is designed to mount between two cabinets
- End panels are finished
- Choose Rolled, Scooped or Flat profile for the valance. Then select Beaded, Traditional or Shaker.
- Accepts onlays
- Optional corbels can be installed below the hood
- The recess in the display niche allows for 3″ puck lights
- Call Technical assistance at 800.551.3404 for modifications.

HOW TO ORDER

- Nomenclature indicates width by height.
- When ordering the baffle style liner, increase the base height of the ARA hood by 1″. This is a no charge option.
- Order corbels, onlays and other decorative accents separately
- Order blowers, fans and liners directly from Stanisci Designs. www.wood-hood.com, 248-572-6880
- Cannot be placed on rush schedule.
- Pricing P-83

INSTALLATION TIP

- The beaded panel removes for easier installation.

© Copyright StarMark Cabinetry MARCH 2021

ADIP PROFILES

For block 2670

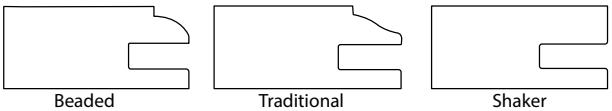

There is an extended lead time for Stanisci wood hoods. See your Cycle Ship for more information. We distribute Cycle Ship approximately every six weeks.

Block 2670 Stanisci Wood Hood B-Series

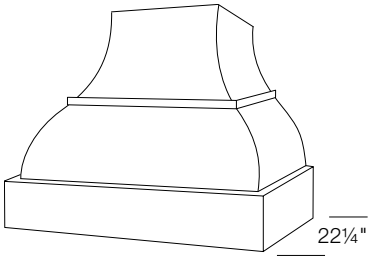

B-Series

30" High	42" High	48" High
B3630	B3642	B3648
B4230	B4242	B4248
B4830	B4842	B4848
B5430	B5442	B5448
B6030	B6042	B6048

DESIGN CONSIDERATIONS

30", 42", 48" High - 22¼" Deep

- Accepts onlays
- Optional corbels can be installed below the hood
- Curved wood top
- Not trimmable
- Call Technical assistance at 800.551.3404 for modifications.

HOW TO ORDER

- Nomenclature indicates width by height.
- When ordering the baffle style liner, increase the base height of the B hood by 2¾". This is a no charge option.
- Order corbels, onlays and other decorative accents separately
- Order blowers, fans and liners directly from Stanisci Designs. www.wood-hood.com, 248-572-6880
- Cannot be placed on rush schedule.
- Pricing P-84

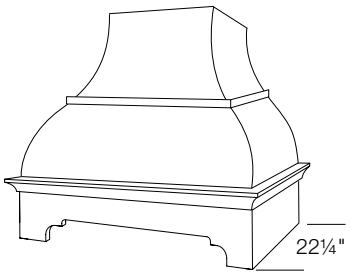

B-Series

30" High	42" High	48" High
BDP13630	BDP13642	BDP13648
BDP14230	BDP14242	BDP14248
BDP14830	BDP14842	BDP14848
BDP15430	BDP15442	BDP15448
BDP16030	BDP16042	BDP16048

DESIGN CONSIDERATIONS

30", 42", 48" High - 22¼" Deep

- Optional corbels can be installed below the hood
- Curved wood top
- Not trimmable
- Call Technical assistance at 800.551.3404 for modifications.
- Dimensions do not include moulding projections which adds 2⅜" per side and front

HOW TO ORDER

- Nomenclature indicates width by height.
- When ordering the baffle style liner, increase the base height of the BDP hood by 1". This is a no charge option.
- Order corbels separately
- Order blowers, fans and liners directly from Stanisci Designs. www.wood-hood.com, 248-572-6880
- Cannot be placed on rush schedule.
- Pricing P-84

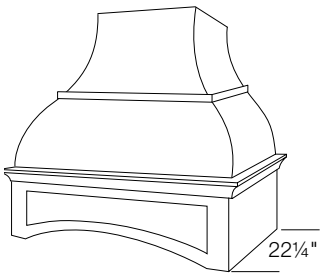

B-Series

30" High	42" High	48" High
BDP23630	BDP23642	BDP23648
BDP24230	BDP24242	BDP24248
BDP24830	BDP24842	BDP24848
BDP25430	BDP25442	BDP25448
BDP26030	BDP26042	BDP26048

DESIGN CONSIDERATIONS

30", 42", 48" High - 22¼" Deep

- Optional corbels can be installed below the hood
- Curved wood top
- Choose Beaded, Traditional or Shaker inside edge.
- Not trimmable
- Call Technical assistance at 800.551.3404 for modifications.
- Dimensions do not include moulding projections which adds 2⅜" per side and front

HOW TO ORDER

- Nomenclature indicates width by height.
- When ordering the baffle style liner, increase the base height of the BDP hood by 1". This is a no charge option.
- Order corbels separately
- Order blowers, fans and liners directly from Stanisci Designs. www.wood-hood.com, 248-572-6880
- Cannot be placed on rush schedule.
- Pricing P-84

© Copyright StarMark Cabinetry MARCH 2021

Block 2670 Stanisci Wood Hood B-Series

continued I

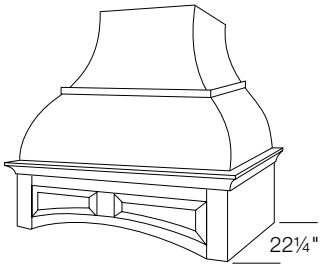

B-Series, 30" High

Rolled	Scooped	Flat
BRA3630R	BRA3630S	BRA3630F
BRA4230R	BRA4230S	BRA4230F
BRA4830R	BRA4830S	BRA4830F
BRA5430R	BRA5430S	BRA5430F
BRA6030R	BRA6030S	BRA6030F

B-Series, 42" High

Rolled	Scooped	Flat
BRA3642R	BRA3642S	BRA3642F
BRA4242R	BRA4242S	BRA4242F
BRA4842R	BRA4842S	BRA4842F
BRA5442R	BRA5442S	BRA5442F
BRA6042R	BRA6042S	BRA6042F

B-Series, 48" High

Rolled	Scooped	Flat
BRA3648R	BRA3648S	BRA3648F
BRA4248R	BRA4248S	BRA4248F
BRA4848R	BRA4848S	BRA4848F
BRA5448R	BRA5448S	BRA5448F
BRA6048R	BRA6048S	BRA6048F

DESIGN CONSIDERATIONS

30", 42", 48" High - 22¼" Deep

- Choose Rolled, Scooped or Flat profile for the valance. Then select Beaded, Traditional or Shaker.
- Optional corbels can be installed below the hood
- Curved wood top
- Not trimmable
- Call Technical assistance at 800.551.3404 for modifications.
- Dimensions do not include moulding projections which add 2⅜" per side and front

HOW TO ORDER

- Nomenclature indicates width by height.
- When ordering the baffle style liner, increase the base height of the BRA hood by 1". This is a no charge option.
- Order corbels separately
- Order blowers, fans and liners directly from Stanisci Designs. www.wood-hood.com, 248-572-6880
- Cannot be placed on rush schedule.
- Pricing P-85

Block 2670 Stanisci Wood Hood BX-Series

NEW! I

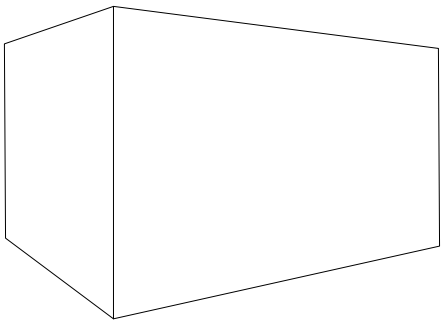

BX-Series, 24" High

BX3024
BX3624
BX4224
BX4824
BX5424
BX6024

BX-Series, 30" High

BX3030
BX3630
BX4230
BX4830
BX5430
BX6030

BX-Series, 36" High

BX3036
BX3636
BX4236
BX4836
BX5436
BX6036

BX-Series, 42" High

BX3042
BX3642
BX4242
BX4842
BX5442
BX6042

DESIGN CONSIDERATIONS

24", 30", 36", 42" High - 22¼" Deep

- Not trimmable
- Call Technical assistance at 800.551.3404 for modifications.
- Grain direction is horizontal

HOW TO ORDER

- Nomenclature indicates width by height.
- Order blowers, fans and liners directly from Stanisci Designs. www.wood-hood.com, 248-572-6880
- Cannot be placed on rush schedule.
- Pricing P-86

© Copyright StarMark Cabinetry MARCH 2021

Block 2670 Stanisci Wood Hood BX-Series

NEW! I

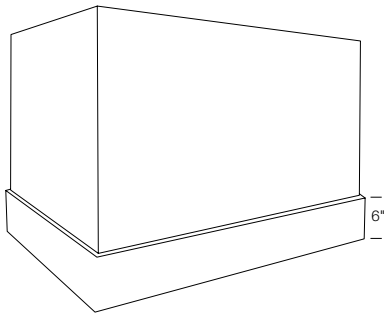

BX-Series, 24" High
BXHW3024
BXHW3624
BXHW4224
BXHW4824
BXHW5424
BXHW6024

BX-Series, 36" High
BXHW3036
BXHW3636
BXHW4236
BXHW4836
BXHW5436
BXHW6036

BX-Series, 30" High
BXHW3030
BXHW3630
BXHW4230
BXHW4830
BXHW5430
BXHW6030

BX-Series, 42" High
BXHW3042
BXHW3642
BXHW4242
BXHW4842
BXHW5442
BXHW6042

DESIGN CONSIDERATIONS

24", 30", 36", 42" High - 22¼" Deep

- Not trimmable
- Call Technical assistance at 800.551.3404 for modifications.
- Grain direction is horizontal

HOW TO ORDER

- Nomenclature indicates width by height.
- When ordering the baffle style liner, increase the base height of the hood by 2¾". This is a no charge option.
- Order blowers, fans and liners directly from Stanisci Designs. www.wood-hood.com, 248-572-6880
- Cannot be placed on rush schedule.
- Pricing P-87

Block 2670 Stanisci Wood Hood BX-Series

NEW! I

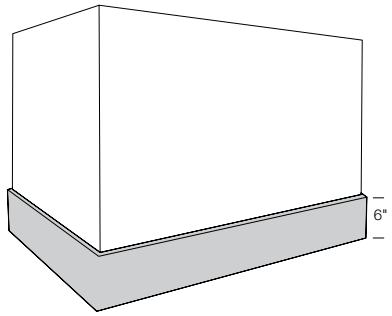

BX-Series, 24" High
BXSS3024
BXSS3624
BXSS4224
BXSS4824
BXSS5424
BXSS6024

BX-Series, 36" High
BXSS3036
BXSS3636
BXSS4236
BXSS4836
BXSS5436
BXSS6036

BX-Series, 30" High
BXSS3030
BXSS3630
BXSS4230
BXSS4830
BXSS5430
BXSS6030

BX-Series, 42" High
BXSS3042
BXSS3642
BXSS4242
BXSS4842
BXSS5442
BXSS6042

DESIGN CONSIDERATIONS

24", 30", 36", 42" High - 22¼" Deep

- Not trimmable
- Call Technical assistance at 800.551.3404 for modifications.
- Grain direction is horizontal
- Stainless steel baffle base/liner with LED bulbs

HOW TO ORDER

- Nomenclature indicates width by height.
- Order blower directly from Stanisci Designs. www.wood-hood.com, 248-572-6880
- Cannot be placed on rush schedule.
- Pricing P-88

© Copyright StarMark Cabinetry MARCH 2021

Block 2670 Stanisci Wood Hood BX-Series

NEW! I

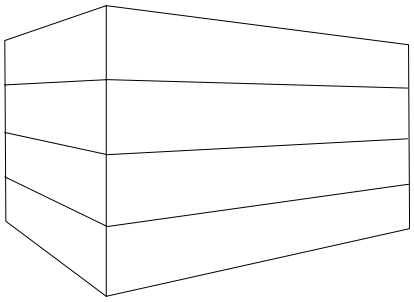

BX-Series, 24" High
BX3024SH
BX3624SH
BX4224SH
BX4824SH
BX5424SH
BX6024SH

BX-Series, 36" High
BX3036SH
BX3636SH
BX4236SH
BX4836SH
BX5436SH
BX6036SH

BX-Series, 30" High
BX3030SH
BX3630SH
BX4230SH
BX4830SH
BX5430SH
BX6030SH

BX-Series, 42" High
BX3042SH
BX3642SH
BX4242SH
BX4842SH
BX5442SH
BX6042SH

DESIGN CONSIDERATIONS

24", 30", 36", 42" High - 22¼" Deep

- Not trimmable
- Call Technical assistance at 800.551.3404 for modifications.
- Grain direction is horizontal
- Horizontal v-groove lines create a shiplap appearance

HOW TO ORDER

- Nomenclature indicates width by height.
- Order blowers, fans and liners directly from Stanisci Designs. www.wood-hood.com, 248-572-6880
- Cannot be placed on rush schedule.
- Pricing P-89

Block 2670 Stanisci Wood Hood BX-Series

NEW! I

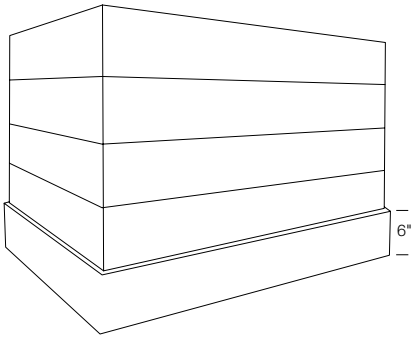

BX-Series, 24" High
BXHW3024SH
BXHW3624SH
BXHW4224SH
BXHW4824SH
BXHW5424SH
BXHW6024SH

BX-Series, 36" High
BXHW3036SH
BXHW3636SH
BXHW4236SH
BXHW4836SH
BXHW5436SH
BXHW6036SH

BX-Series, 30" High
BXHW3030SH
BXHW3630SH
BXHW4230SH
BXHW4830SH
BXHW5430SH
BXHW6030SH

BX-Series, 42" High
BXHW3042SH
BXHW3642SH
BXHW4242SH
BXHW4842SH
BXHW5442SH
BXHW6042SH

DESIGN CONSIDERATIONS

24", 30", 36", 42" High - 22¼" Deep

- Not trimmable
- Call Technical assistance at 800.551.3404 for modifications.
- Grain direction is horizontal
- Horizontal v-groove lines create a shiplap appearance

HOW TO ORDER

- Nomenclature indicates width by height.
- When ordering the baffle style liner, increase the base height of the hood by 2¾". This is a no charge option.
- Order blowers, fans and liners directly from Stanisci Designs. www.wood-hood.com, 248-572-6880
- Cannot be placed on rush schedule.
- Pricing P-90

© Copyright StarMark Cabinetry MARCH 2021

Block 2670 Stanisci Wood Hood BX-Series

NEW! I

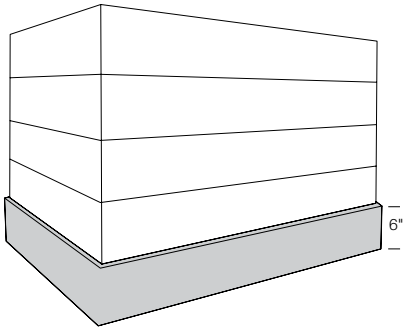

DESIGN CONSIDERATIONS

24", 30", 36", 42" High - 22¼" Deep

- Not trimmable
- Call Technical assistance at 800.551.3404 for modifications.
- Grain direction is horizontal
- Stainless steel baffle base/liner with LED bulbs
- Horizontal v-groove lines create a shiplap appearance

HOW TO ORDER

- Nomenclature indicates width by height.
- Order blower directly from Stanisci Designs. www.wood-hood.com, 248-572-6880
- Cannot be placed on rush schedule.
- Pricing P-91

BX-Series, 24" High
BXSS3024SH
BXSS3624SH
BXSS4224SH
BXSS4824SH
BXSS5424SH
BXSS6024SH

BX-Series, 36" High
BXSS3036SH
BXSS3636SH
BXSS4236SH
BXSS4836SH
BXSS5436SH
BXSS6036SH

BX-Series, 30" High
BXSS3030SH
BXSS3630SH
BXSS4230SH
BXSS4830SH
BXSS5430SH
BXSS6030SH

BX-Series, 42" High
BXSS3042SH
BXSS3642SH
BXSS4242SH
BXSS4842SH
BXSS5442SH
BXSS6042SH

Block 2670 Stanisci Wood Hood C-Series

NEW! I

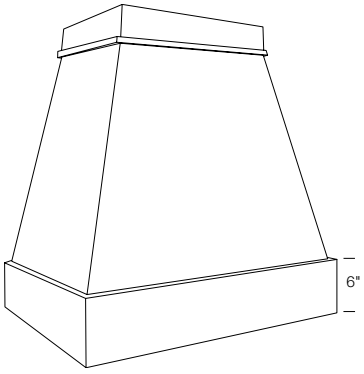

DESIGN CONSIDERATIONS

24", 30", 36", 42", 48" High - 22¼" Deep

- Trimmable chimney
- Call Technical assistance at 800.551.3404 for modifications.
- Grain direction is horizontal
- 4" chimney height (3½" exposed with ½" behind molding)

HOW TO ORDER

- Nomenclature indicates width by height.
- When ordering the baffle style liner, increase the base height of the hood by 2¾". This is a no charge option.
- Order blowers, fans and liners directly from Stanisci Designs. www.wood-hood.com, 248-572-6880
- Cannot be placed on rush schedule.
- Pricing P-92

C-Series, 24" High
CHW3024
CHW3624
CHW4224
CHW4824
CHW5424
CHW6024

C-Series, 36" High
CHW3036
CHW3636
CHW4236
CHW4836
CHW5436
CHW6036

C-Series, 48" High
CHW3048
CHW3648
CHW4248
CHW4848
CHW5448
CHW6048

C-Series, 30" High
CHW3030
CHW3630
CHW4230
CHW4830
CHW5430
CHW6030

C-Series, 42" High
CHW3042
CHW3642
CHW4242
CHW4842
CHW5442
CHW6042

© Copyright StarMark Cabinetry MARCH 2021

Block 2670 Stanisci Wood Hood C-Series

NEW! I

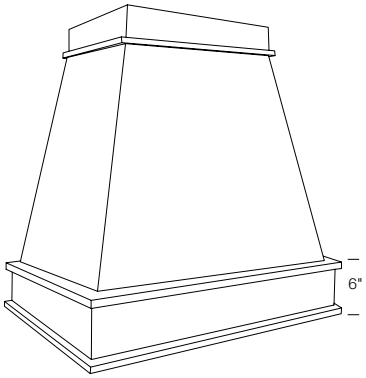

DESIGN CONSIDERATIONS

24", 30", 36", 42", 48" High - 22¼" Deep

- Trimmable chimney
- Call Technical assistance at 800.551.3404 for modifications.
- Grain direction is horizontal
- 4" chimney height (3½" exposed with ½" behind molding)

HOW TO ORDER

- Nomenclature indicates width by height.
- When ordering the baffle style liner, increase the base height of the hood by 2¾". This is a no charge option.
- Order blowers, fans and liners directly from Stanisci Designs. www.wood-hood.com, 248-572-6880
- Cannot be placed on rush schedule.
- Pricing P-93

C-Series, 24" High	C-Series, 36" High	C-Series, 48" High
CPL3024	CPL3036	CPL3048
CPL3624	CPL3636	CPL3648
CPL4224	CPL4236	CPL4248
CPL4824	CPL4836	CPL4848
CPL5424	CPL5436	CPL5448
CPL6024	CPL6036	CPL6048

C-Series, 30" High	C-Series, 42" High
CPL3030	CPL3042
CPL3630	CPL3642
CPL4230	CPL4242
CPL4830	CPL4842
CPL5430	CPL5442
CPL6030	CPL6042

Block 2670 Stanisci Wood Hood C-Series

NEW! I

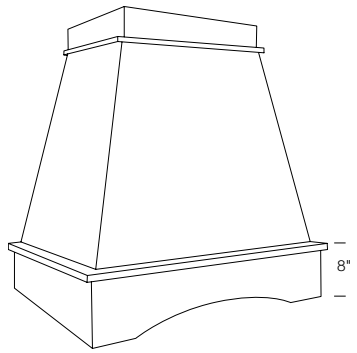

DESIGN CONSIDERATIONS

24", 30", 36", 42", 48" High - 22¼" Deep

- Trimmable chimney
- Call Technical assistance at 800.551.3404 for modifications.
- Grain direction is horizontal
- 4" chimney height (3½" exposed with ½" behind molding)

HOW TO ORDER

- Nomenclature indicates width by height.
- When ordering the baffle style liner, increase the base height of the hood by 2". This is a no charge option.
- Order blowers, fans and liners directly from Stanisci Designs. www.wood-hood.com, 248-572-6880
- Cannot be placed on rush schedule.
- Pricing P-94

C-Series, 24" High	C-Series, 36" High	C-Series, 48" High
CSL3024	CSL3036	CSL3048
CSL3624	CSL3636	CSL3648
CSL4224	CSL4236	CSL4248
CSL4824	CSL4836	CSL4848
CSL5424	CSL5436	CSL5448
CSL6024	CSL6036	CSL6048

C-Series, 30" High	C-Series, 42" High
CSL3030	CSL3042
CSL3630	CSL3642
CSL4230	CSL4242
CSL4830	CSL4842
CSL5430	CSL5442
CSL6030	CSL6042

© Copyright StarMark Cabinetry MARCH 2021

Block 2670 Stanisci Wood Hood C-Series

NEW! I

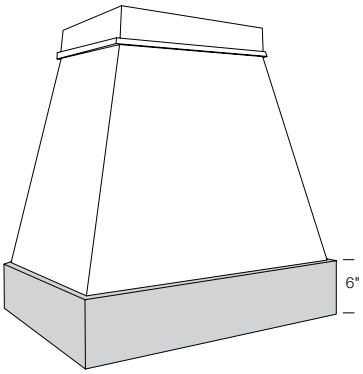

DESIGN CONSIDERATIONS

24", 30", 36", 42", 48" High - 22¼" Deep

- Trimmable chimney
- Call Technical assistance at 800.551.3404 for modifications.
- Stainless steel baffle base/liner with LED bulbs
- Grain direction is horizontal
- 4" chimney height (3½" exposed with ½" behind molding)

HOW TO ORDER

- Nomenclature indicates width by height.
- Order blowers and fans directly from Stanisci Designs. www.wood-hood.com, 248-572-6880
- Cannot be placed on rush schedule.
- Pricing P-95

C-Series, 24" High	C-Series, 36" High	C-Series, 48" High
CSS3024	CSS3036	CSS3048
CSS3624	CSS3636	CSS3648
CSS4224	CSS4236	CSS4248
CSS4824	CSS4836	CSS4848
CSS5424	CSS5436	CSS5448
CSS6024	CSS6036	CSS6048

C-Series, 30" High	C-Series, 42" High
CSS3030	CSS3042
CSS3630	CSS3642
CSS4230	CSS4242
CSS4830	CSS4842
CSS5430	CSS5442
CSS6030	CSS6042

Block 2670 Stanisci Wood Hood C-Series

NEW! I

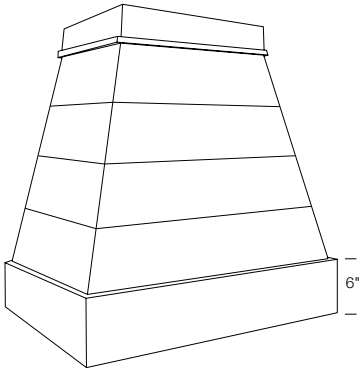

DESIGN CONSIDERATIONS

24", 30", 36", 42", 48" High - 22¼" Deep

- Trimmable chimney
- Call Technical assistance at 800.551.3404 for modifications.
- Grain direction is horizontal
- 4" chimney height (3½" exposed with ½" behind molding)
- Horizontal v-groove lines create a shiplap appearance

HOW TO ORDER

- Nomenclature indicates width by height.
- When ordering the baffle style liner, increase the base height of the hood by 2¾". This is a no charge option.
- Order blowers, fans and liners directly from Stanisci Designs. www.wood-hood.com, 248-572-6880
- Cannot be placed on rush schedule.
- Pricing P-96

C-Series, 24" High	C-Series, 36" High	C-Series, 48" High
CHW3024SH	CHW3036SH	CHW3048SH
CHW3624SH	CHW3636SH	CHW3648SH
CHW4224SH	CHW4236SH	CHW4248SH
CHW4824SH	CHW4836SH	CHW4848SH
CHW5424SH	CHW5436SH	CHW5448SH
CHW6024SH	CHW6036SH	CHW6048SH

C-Series, 30" High	C-Series, 42" High
CHW3030SH	CHW3042SH
CHW3630SH	CHW3642SH
CHW4230SH	CHW4242SH
CHW4830SH	CHW4842SH
CHW5430SH	CHW5442SH
CHW6030SH	CHW6042SH

© Copyright StarMark Cabinetry MARCH 2021

Block 2670 Stanisci Wood Hood C-Series

NEW! I

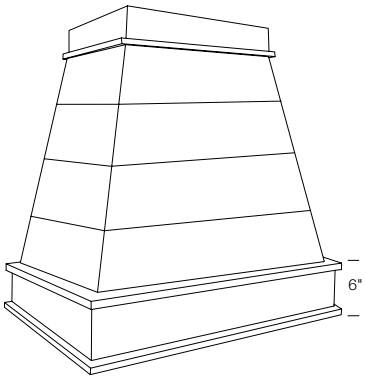

DESIGN CONSIDERATIONS

24", 30", 36", 42", 48" High - 22¼" Deep

- Trimmable chimney
- Call Technical assistance at 800.551.3404 for modifications.
- Grain direction is horizontal
- 4" chimney height (3½" exposed with ½" behind molding)
- Horizontal v-groove lines create a shiplap appearance

HOW TO ORDER

- Nomenclature indicates width by height.
- When ordering the baffle style liner, increase the base height of the hood by 2¾". This is a no charge option.
- Order blowers, fans and liners directly from Stanisci Designs. www.wood-hood.com, 248-572-6880
- Cannot be placed on rush schedule.
- Pricing P-97

C-Series, 24" High	C-Series, 36" High	C-Series, 48" High
CPL3024SH	CPL3036SH	CPL3048SH
CPL3624SH	CPL3636SH	CPL3648SH
CPL4224SH	CPL4236SH	CPL4248SH
CPL4824SH	CPL4836SH	CPL4848SH
CPL5424SH	CPL5436SH	CPL5448SH
CPL6024SH	CPL6036SH	CPL6048SH

C-Series, 30" High	C-Series, 42" High
CPL3030SH	CPL3042SH
CPL3630SH	CPL3642SH
CPL4230SH	CPL4242SH
CPL4830SH	CPL4842SH
CPL5430SH	CPL5442SH
CPL6030SH	CPL6042SH

Block 2670 Stanisci Wood Hood C-Series

NEW! I

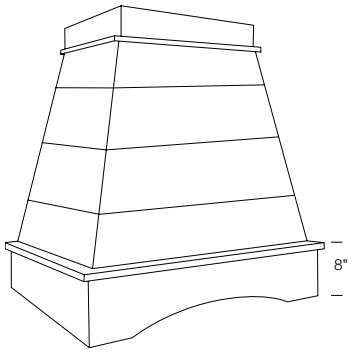

DESIGN CONSIDERATIONS

24", 30", 36", 42", 48" High - 22¼" Deep

- Trimmable chimney
- Call Technical assistance at 800.551.3404 for modifications.
- Grain direction is horizontal
- 4" chimney height (3½" exposed with ½" behind molding)
- Horizontal v-groove lines create a shiplap appearance

HOW TO ORDER

- Nomenclature indicates width by height.
- When ordering the baffle style liner, increase the base height of the hood by 2". This is a no charge option.
- Order blowers, fans and liners directly from Stanisci Designs. www.wood-hood.com, 248-572-6880
- Cannot be placed on rush schedule.
- Pricing P-98

C-Series, 24" High	C-Series, 36" High	C-Series, 48" High
CSL3024SH	CSL3036SH	CSL3048SH
CSL3624SH	CSL3636SH	CSL3648SH
CSL4224SH	CSL4236SH	CSL4248SH
CSL4824SH	CSL4836SH	CSL4848SH
CSL5424SH	CSL5436SH	CSL5448SH
CSL6024SH	CSL6036SH	CSL6048SH

C-Series, 30" High	C-Series, 42" High
CSL3030SH	CSL3042SH
CSL3630SH	CSL3642SH
CSL4230SH	CSL4242SH
CSL4830SH	CSL4842SH
CSL5430SH	CSL5442SH
CSL6030SH	CSL6042SH

© Copyright StarMark Cabinetry MARCH 2021

Block 2670 Stanisci Wood Hood C-Series

NEW!

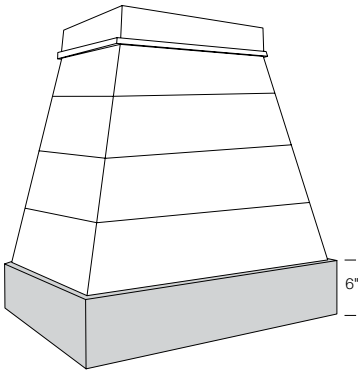

DESIGN CONSIDERATIONS

24", 30", 36", 42", 48" High - 22¼" Deep

- Trimmable chimney
- Call Technical assistance at 800.551.3404 for modifications.
- Stainless steel baffle base/liner with LED bulbs
- Grain direction is horizontal
- 4" chimney height (3½" exposed with ½" behind molding)
- Horizontal v-groove lines create a shiplap appearance

HOW TO ORDER

- Nomenclature indicates width by height.
- Order blowers and fans directly from Stanisci Designs. www.wood-hood.com, 248-572-6880
- Cannot be placed on rush schedule.
- Pricing P-99

C-Series, 24" High	C-Series, 36" High	C-Series, 48" High
CSS3024SH	CSS3036SH	CSS3048SH
CSS3624SH	CSS3636SH	CSS3648SH
CSS4224SH	CSS4236SH	CSS4248SH
CSS4824SH	CSS4836SH	CSS4848SH
CSS5424SH	CSS5436SH	CSS5448SH
CSS6024SH	CSS6036SH	CSS6048SH

C-Series, 30" High	C-Series, 42" High
CSS3030SH	CSS3042SH
CSS3630SH	CSS3642SH
CSS4230SH	CSS4242SH
CSS4830SH	CSS4842SH
CSS5430SH	CSS5442SH
CSS6030SH	CSS6042SH

© Copyright StarMark Cabinetry MARCH 2021

Block 2670 Stanisci Wood Hood D-Series

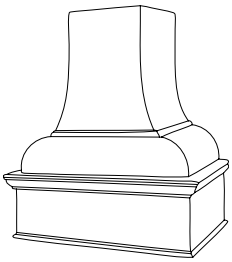

D-Series

30″ High	42″ High	48″ High
D3630	D3642	D3648
D4230	D4242	D4248
D4830	D4842	D4848
D5430	D5442	D5448
D6030	D6042	D6048

DESIGN CONSIDERATIONS

30″, 42″, 48″ High - 22¼″ Deep

- Accepts onlays
- Optional corbels can be installed below the hood
- Curved wood top
- Not trimmable
- Call Technical assistance at 800.551.3404 for modifications.
- Dimensions do not include moulding projections which add 2⅜″ per side and front

HOW TO ORDER

- Nomenclature indicates width by height.
- Order corbels, onlays and other decorative accents separately
- Order blowers, fans and liners directly from Stanisci Designs. www.wood-hood.com, 248-572-6880
- Cannot be placed on rush schedule.
- Pricing P-100

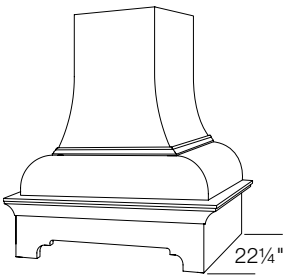

D-Series

30″ High	42″ High	48″ High
DDP13630	DDP13642	DDP13648
DDP14230	DDP14242	DDP14248
DDP14830	DDP14842	DDP14848
DDP15430	DDP15442	DDP15448
DDP16030	DDP16042	DDP16048

DESIGN CONSIDERATIONS

30″, 42″, 48″ High - 22¼″ Deep

- Optional corbels can be installed below the hood
- Curved wood top
- Not trimmable
- Call Technical assistance at 800.551.3404 for modifications.
- Dimensions do not include moulding projections which add 2⅜″ per side and front

HOW TO ORDER

- Nomenclature indicates width by height.
- When ordering the baffle style liner, increase the base height of the DDP hood by 1″. This is a no charge option.
- Order corbels separately
- Order blowers, fans and liners directly from Stanisci Designs. www.wood-hood.com, 248-572-6880
- Cannot be placed on rush schedule.
- Pricing P-100

Block 2670 Stanisci Wood Hood D-Series continued

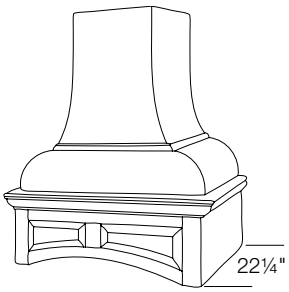

D-Series, 30″ High

Rolled	Scooped	Flat
DRA3630R	DRA3630S	DRA3630F
DRA4230R	DRA4230S	DRA4230F
DRA4830R	DRA4830S	DRA4830F
DRA5430R	DRA5430S	DRA5430F
DRA6030R	DRA6030S	DRA6030F

D-Series, 48″ High

Rolled	Scooped	Flat
DRA3648R	DRA3648S	DRA3648F
DRA4248R	DRA4248S	DRA4248F
DRA4848R	DRA4848S	DRA4848F
DRA5448R	DRA5448S	DRA5448F
DRA6048R	DRA6048S	DRA6048F

D-Series, 42″ High

Rolled	Scooped	Flat
DRA3642R	DRA3642S	DRA3642F
DRA4242R	DRA4242S	DRA4242F
DRA4842R	DRA4842S	DRA4842F
DRA5442R	DRA5442S	DRA5442F
DRA6042R	DRA6042S	DRA6042F

DESIGN CONSIDERATIONS

30″, 42″, 48″ High - 22¼″ Deep

- Choose Rolled, Scooped or Flat profile for the valance. Then select Beaded, Traditional or Shaker.
- Optional corbels can be installed below the hood
- Curved wood top
- Not trimmable
- Call Technical assistance at 800.551.3404 for modifications.
- Dimensions do not include moulding projections which add 2⅜″ per side and front

HOW TO ORDER

- Nomenclature indicates width by height.
- When ordering the baffle style liner, increase the base height of the DRA hood by 1″. This is a no charge option.
- Order corbels separately
- Order blowers, fans and liners directly from Stanisci Designs. www.wood-hood.com, 248-572-6880
- Cannot be placed on rush schedule.
- Pricing P-101

© Copyright StarMark Cabinetry MARCH 2021

ADIP PROFILES

For block 2670

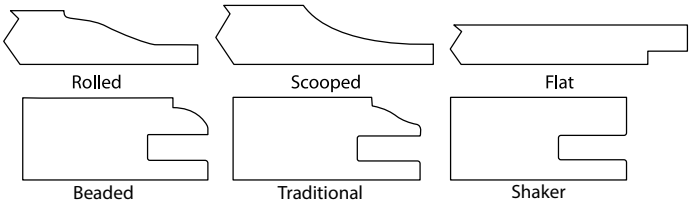

There is an extended lead time for Stanisci wood hoods. See your Cycle Ship for more information. We distribute Cycle Ship approximately every six weeks.

- Stanisci hoods are available in Alder, Rustic Alder, Cherry, Hickory, Maple, Red Oak and Walnut. All other species must be quoted. Verify availability of specie to be quoted.
- To determine proper installation height of hood, consult the hood and appliance manufacturer specifications, as well as your local codes.

Block 2670 Stanisci Wood Hood E-Series

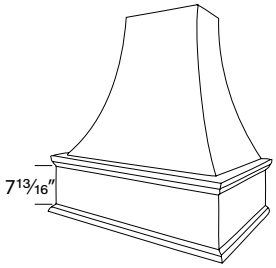

E-Series

30" High	42" High	48" High
E3630	E3642	E3648
E4230	E4242	E4248
E4830	E4842	E4848
E5430	E5442	E5448
E6030	E6042	E6048

DESIGN CONSIDERATIONS

30", 42", 48" High - 22¼" Deep

- Accepts onlays
- Optional corbels can be installed below the hood
- Curved wood top
- Not trimmable
- Call Technical assistance at 800.551.3404 for modifications.
- Dimensions do not include moulding projections which add 1⅛" per side and front

HOW TO ORDER

- Nomenclature indicates width by height.
- Order corbels, onlays and other decorative accents separately
- Order blowers, fans and liners directly from Stanisci Designs. www.wood-hood.com, 248-572-6880
- Cannot be placed on rush schedule.
- Pricing P-101

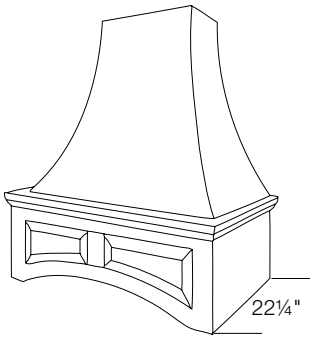

E-Series, 30" High

Rolled	Scooped	Flat
ERA3630R	ERA3630S	ERA3630F
ERA4230R	ERA4230S	ERA4230F
ERA4830R	ERA4830S	ERA4830F
ERA5430R	ERA5430S	ERA5430F
ERA6030R	ERA6030S	ERA6030F

E-Series, 48" High

Rolled	Scooped	Flat
ERA3648R	ERA3648S	ERA3648F
ERA4248R	ERA4248S	ERA4248F
ERA4848R	ERA4848S	ERA4848F
ERA5448R	ERA5448S	ERA5448F
ERA6048R	ERA6048S	ERA6048F

E-Series, 42" High

Rolled	Scooped	Flat
ERA3642R	ERA3642S	ERA3642F
ERA4242R	ERA4242S	ERA4242F
ERA4842R	ERA4842S	ERA4842F
ERA5442R	ERA5442S	ERA5442F
ERA6042R	ERA6042S	ERA6042F

DESIGN CONSIDERATIONS

30", 42", 48" High - 22¼" Deep

- Choose Rolled, Scooped or Flat profile for the valance. Then select Beaded, Traditional or Shaker.
- Optional corbels can be installed below the hood
- Curved wood top
- Not trimmable
- Call Technical assistance at 800.551.3404 for modifications.
- Dimensions do not include moulding projections which add 1⅛" per side and front

HOW TO ORDER

- Nomenclature indicates width by height.
- When ordering the baffle style liner, increase the base height of the ERA hood by 1". This is a no charge option.
- Order corbels separately
- Order blowers, fans and liners directly from Stanisci Designs. www.wood-hood.com, 248-572-6880
- Cannot be placed on rush schedule.
- Pricing P-102

© Copyright StarMark Cabinetry MARCH 2021

Block 2670 Stanisci Wood Hood FX-Series

NEW! I

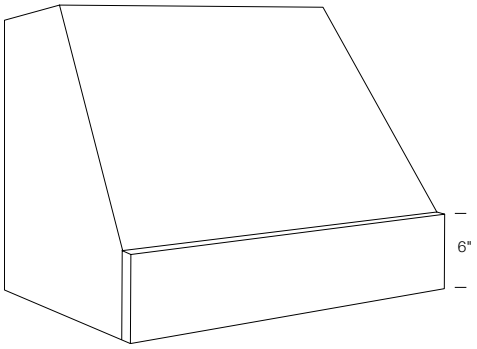

DESIGN CONSIDERATIONS

24", 30", 36", 42" High - 22¼" Deep

- Not trimmable
- Call Technical assistance at 800.551.3404 for modifications.
- Grain direction is horizontal

HOW TO ORDER

- Nomenclature indicates width by height.
- When ordering the baffle style liner, increase the base height of the hood by 2¾". This is a no charge option.
- Order blowers, fans and liners directly from Stanisci Designs. www.wood-hood.com, 248-572-6880
- Cannot be placed on rush schedule.
- Pricing P-103

FX-Series, 24" High	FX-Series, 30" High	FX-Series, 36" High	FX-Series, 42" High
FX3024	FX3030	FX3036	FX3042
FX3624	FX3630	FX3636	FX3642
FX4224	FX4230	FX4236	FX4242
FX4824	FX4830	FX4836	FX4842
FX5424	FX5430	FX5436	FX5442
FX6024	FX6030	FX6036	FX6042

Block 2670 Stanisci Wood Hood FX-Series

NEW! I

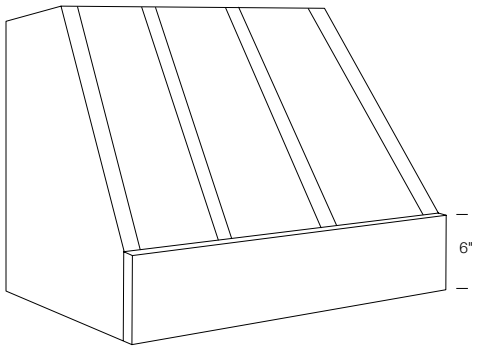

DESIGN CONSIDERATIONS

24", 30", 36", 42" High - 22¼" Deep

- Not trimmable
- Call Technical assistance at 800.551.3404 for modifications.
- Grain direction is horizontal
- Applied battens

HOW TO ORDER

- Nomenclature indicates width by height.
- When ordering the baffle style liner, increase the base height of the hood by 2¾". This is a no charge option.
- Order blowers, fans and liners directly from Stanisci Designs. www.wood-hood.com, 248-572-6880
- Cannot be placed on rush schedule.
- Pricing P-104

FX-Series, 24" High	FX-Series, 30" High	FX-Series, 36" High	FX-Series, 42" High
FX3024BAT	FX3030BAT	FX3036BAT	FX3042BAT
FX3624BAT	FX3630BAT	FX3636BAT	FX3642BAT
FX4224BAT	FX4230BAT	FX4236BAT	FX4242BAT
FX4824BAT	FX4830BAT	FX4836BAT	FX4842BAT
FX5424BAT	FX5430BAT	FX5436BAT	FX5442BAT
FX6024BAT	FX6030BAT	FX6036BAT	FX6042BAT

© Copyright StarMark Cabinetry MARCH 2021

Block 2670 Stanisci Wood Hood FX-Series

NEW!

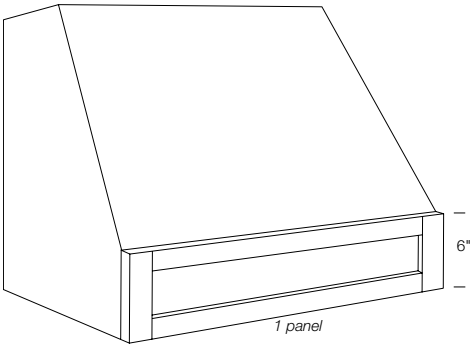

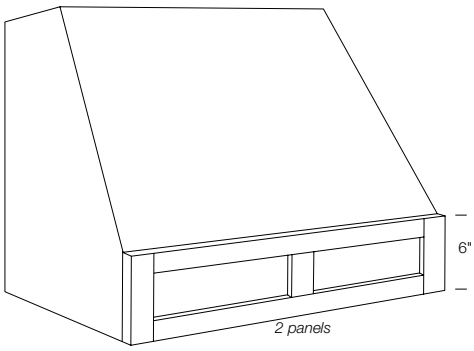

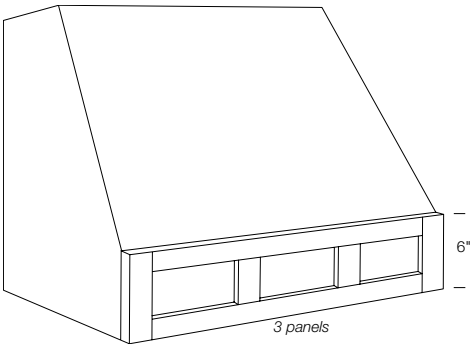

DESIGN CONSIDERATIONS

24", 30", 36", 42" High - 22¼" Deep

- Not trimmable
- Call Technical assistance at 800.551.3404 for modifications.
- Grain direction is horizontal
- When a raised panel door style is specified on the order, the base height is increased to 8¾".

HOW TO ORDER

- Nomenclature indicates width by height.
- When ordering the baffle style liner, increase the base height of the hood by 2¾". This is a no charge option.
- Order blowers, fans and liners directly from Stanisci Designs. www.wood-hood.com, 248-572-6880
- Cannot be placed on rush schedule.
- Pricing P-105

FX-Series, 24" High

1Panel	2 Panels	3 Panels
FXBP30241P	FXBP30242P	FXBP30243P
FXBP36241P	FXBP36242P	FXBP36243P
FXBP42241P	FXBP42242P	FXBP42243P
FXBP48241P	FXBP48242P	FXBP48243P
FXBP54241P	FXBP54242P	FXBP54243P
FXBP60241P	FXBP60242P	FXBP60243P

FX-Series, 30" High

1Panel	2 Panels	3 Panels
FXBP30301P	FXBP30302P	FXBP30303P
FXBP36301P	FXBP36302P	FXBP36303P
FXBP42301P	FXBP42302P	FXBP42303P
FXBP48301P	FXBP48302P	FXBP48303P
FXBP54301P	FXBP54302P	FXBP54303P
FXBP60301P	FXBP60302P	FXBP60303P

FX-Series, 36" High

1Panel	2 Panels	3 Panels
FXBP30361P	FXBP30362P	FXBP30363P
FXBP36361P	FXBP36362P	FXBP36363P
FXBP42361P	FXBP42362P	FXBP42363P
FXBP48361P	FXBP48362P	FXBP48363P
FXBP54361P	FXBP54362P	FXBP54363P
FXBP60361P	FXBP60362P	FXBP60363P

FX-Series, 42" High

1Panel	2 Panels	3 Panels
FXBP30421P	FXBP30422P	FXBP30423P
FXBP36421P	FXBP36422P	FXBP36423P
FXBP42421P	FXBP42422P	FXBP42423P
FXBP48421P	FXBP48422P	FXBP48423P
FXBP54421P	FXBP54422P	FXBP54423P
FXBP60421P	FXBP60422P	FXBP60423P

© Copyright StarMark Cabinetry MARCH 2021

Block 2670 Stanisci Wood Hood FX-Series

NEW! I

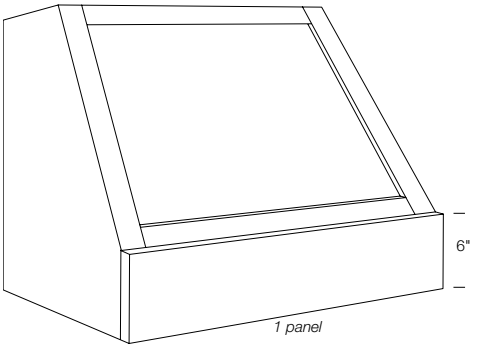

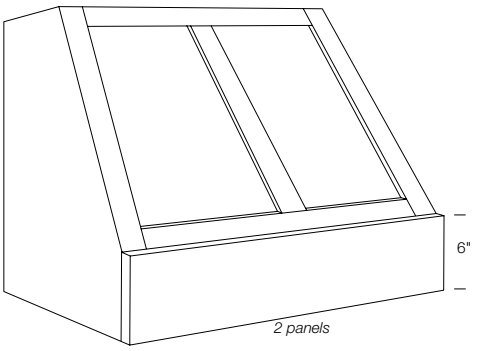

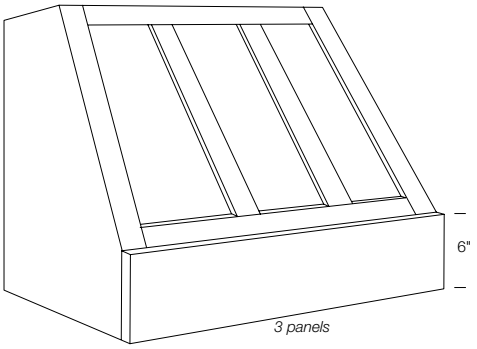

DESIGN CONSIDERATIONS

24", 30", 36", 42" High - 22¼" Deep

- Not trimmable
- Call Technical assistance at 800.551.3404 for modifications.
- Grain direction is horizontal
- ⅛" reveal on both sides and top of upper panel
- The FX 1 panel hood is only available as a flat MDF panel finished in Tinted Varnish (stains are not available).

HOW TO ORDER

- Nomenclature indicates width by height.
- When ordering the baffle style liner, increase the base height of the hood by 2¾". This is a no charge option.
- Order blowers, fans and liners directly from Stanisci Designs. www.wood-hood.com, 248-572-6880
- Cannot be placed on rush schedule.
- Pricing P-106

FX-Series, 24" High

1Panel	2 Panels	3 Panels
FXUP30241P	FXUP30242P	FXUP30243P
FXUP36241P	FXUP36242P	FXUP36243P
FXUP42241P	FXUP42242P	FXUP42243P
FXUP48241P	FXUP48242P	FXUP48243P
FXUP54241P	FXUP54242P	FXUP54243P
FXUP60241P	FXUP60242P	FXUP60243P

FX-Series, 30" High

1Panel	2 Panels	3 Panels
FXUP30301P	FXUP30302P	FXUP30303P
FXUP36301P	FXUP36302P	FXUP36303P
FXUP42301P	FXUP42302P	FXUP42303P
FXUP48301P	FXUP48302P	FXUP48303P
FXUP54301P	FXUP54302P	FXUP54303P
FXUP60301P	FXUP60302P	FXUP60303P

FX-Series, 36" High

1Panel	2 Panels	3 Panels
FXUP30361P	FXUP30362P	FXUP30363P
FXUP36361P	FXUP36362P	FXUP36363P
FXUP42361P	FXUP42362P	FXUP42363P
FXUP48361P	FXUP48362P	FXUP48363P
FXUP54361P	FXUP54362P	FXUP54363P
FXUP60361P	FXUP60362P	FXUP60363P

FX-Series, 42" High

1Panel	2 Panels	3 Panels
FXUP30421P	FXUP30422P	FXUP30423P
FXUP36421P	FXUP36422P	FXUP36423P
FXUP42421P	FXUP42422P	FXUP42423P
FXUP48421P	FXUP48422P	FXUP48423P
FXUP54421P	FXUP54422P	FXUP54423P
FXUP60421P	FXUP60422P	FXUP60423P

© Copyright StarMark Cabinetry MARCH 2021

Block 2670 Stanisci Wood Hood FX-Series

NEW!

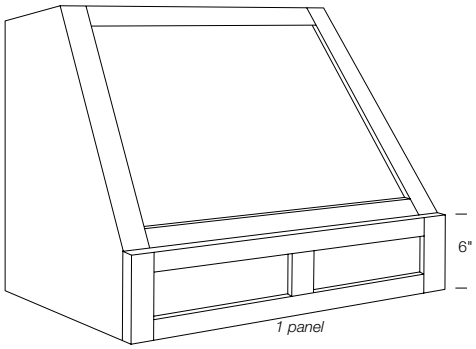

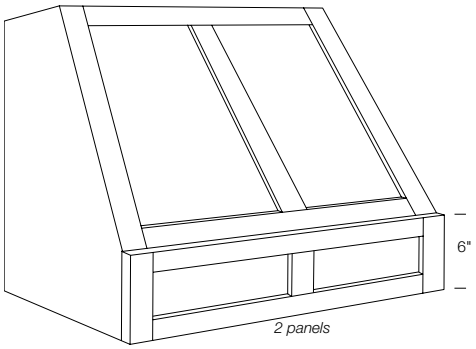

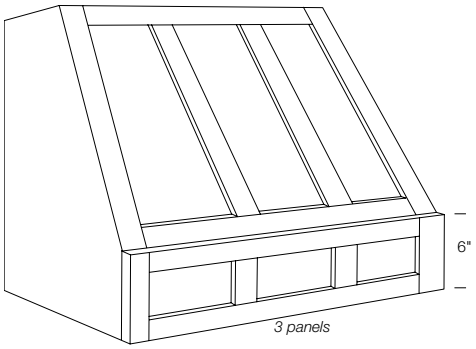

DESIGN CONSIDERATIONS

24", 30", 36", 42" High - 22¼" Deep

- Not trimmable
- Call Technical assistance at 800.551.3404 for modifications.
- Grain direction is horizontal
- When a raised panel door style is specified on the order, the base height is increased to 8¾".
- ⅛" reveal on both sides and top of upper panel
- The FX 1 panel hood is only available as a flat MDF panel finished in Tinted Varnish (stains are not available).

HOW TO ORDER

- Nomenclature indicates width by height.
- When ordering the baffle style liner, increase the base height of the hood by 2¾". This is a no charge option.
- Order blowers, fans and liners directly from Stanisci Designs. www.wood-hood.com, 248-572-6880
- Cannot be placed on rush schedule.
- Pricing P-107

FX-Series, 24" High

1Panel	2 Panels	3 Panels
FBPP30241P	FBPP30242P	FBPP30243P
FBPP36241P	FBPP36242P	FBPP36243P
FBPP42241P	FBPP42242P	FBPP42243P
FBPP48241P	FBPP48242P	FBPP48243P
FBPP54241P	FBPP54242P	FBPP54243P
FBPP60241P	FBPP60242P	FBPP60243P

FX-Series, 30" High

1Panel	2 Panels	3 Panels
FBPP30301P	FBPP30302P	FBPP30303P
FBPP36301P	FBPP36302P	FBPP36303P
FBPP42301P	FBPP42302P	FBPP42303P
FBPP48301P	FBPP48302P	FBPP48303P
FBPP54301P	FBPP54302P	FBPP54303P
FBPP60301P	FBPP60302P	FBPP60303P

FX-Series, 36" High

1Panel	2 Panels	3 Panels
FBPP30361P	FBPP30362P	FBPP30363P
FBPP36361P	FBPP36362P	FBPP36363P
FBPP42361P	FBPP42362P	FBPP42363P
FBPP48361P	FBPP48362P	FBPP48363P
FBPP54361P	FBPP54362P	FBPP54363P
FBPP60361P	FBPP60362P	FBPP60363P

FX-Series, 42" High

1Panel	2 Panels	3 Panels
FBPP30421P	FBPP30422P	FBPP30423P
FBPP36421P	FBPP36422P	FBPP36423P
FBPP42421P	FBPP42422P	FBPP42423P
FBPP48421P	FBPP48422P	FBPP48423P
FBPP54421P	FBPP54422P	FBPP54423P
FBPP60421P	FBPP60422P	FBPP60423P

© Copyright StarMark Cabinetry MARCH 2021

Block 2670 Stanisci Wood Hood G-Series

I

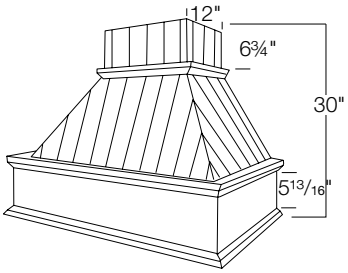

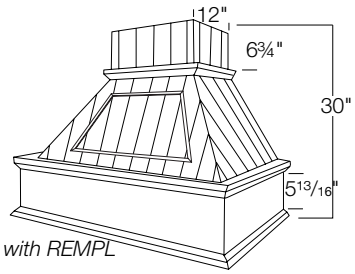

G-Series, Beaded

GBT36PB
GBT42PB
GBT48PB
GBT54PB
GBT60PB

DESIGN CONSIDERATIONS

30" High - 22¼" Deep

- The G-Series hood is designed for 8-foot ceilings
- Accepts onlays
- Optional corbels can be installed below the hood
- Call Technical assistance at 800.551.3404 for modifications.
- Add 2¼" to width of hood for moulding projection
- Chimney is trimmable
- Dimensions do not include moulding projections which add 1⅛" per side and front

HOW TO ORDER

- Nomenclature indicates width.
- When ordering the baffle style liner, increase the base height of the GBT hood by 1". This is a no charge option.
- Available with a removable panel. Specify **REMPL** in Special Information Section. The removable panel changes the look of this hood. See Illustration.
- Order corbels, onlays and other decorative accents separately
- Order blowers, fans and liners directly from Stanisci Designs. www.wood-hood.com, 248-572-6880
- Cannot be placed on rush schedule.
- Pricing P-108

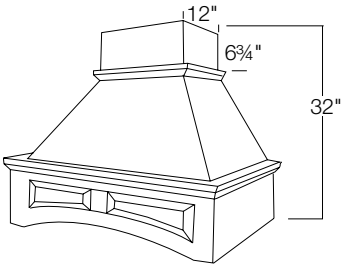

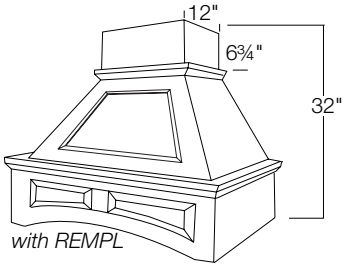

G-Series

Rolled	Scooped	Flat
GRA36R	GRA36S	GRA36F
GRA42R	GRA42S	GRA42F
GRA48R	GRA48S	GRA48F
GRA54R	GRA54S	GRA54F
GRA60R	GRA60S	GRA60F

DESIGN CONSIDERATIONS

32" High - 22¼" Deep

- The G-Series hood is designed for 8-foot ceilings
- Choose Rolled, Scooped or Flat profile for the valance. Then select Beaded, Traditional or Shaker.
- Optional corbels can be installed below the hood
- Call Technical assistance at 800.551.3404 for modifications.
- Add 2¼" to width of hood for moulding projection
- Chimney is trimmable
- Dimensions do not include moulding projections which add 1⅛" per side and front

HOW TO ORDER

- Nomenclature indicates width.
- When ordering the baffle style liner, increase the base height of the GRA hood by 1". This is a no charge option.
- Available with a removable panel. Specify **REMPL** in Special Information Section. The removable panel changes the look of this hood. See Illustration.
- Order corbels separately
- Order blowers, fans and liners directly from Stanisci Designs. www.wood-hood.com, 248-572-6880
- Cannot be placed on rush schedule.
- Pricing P-108

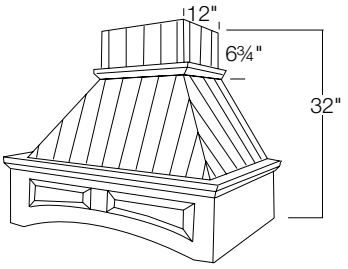

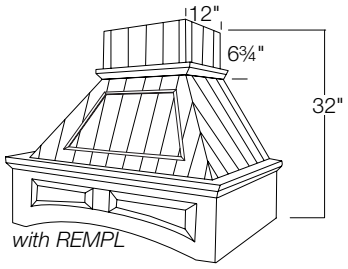

G-Series

Rolled	Scooped	Flat
GRABT36R	GRABT36S	GRABT36F
GRABT42R	GRABT42S	GRABT42F
GRABT48R	GRABT48S	GRABT48F
GRABT54R	GRABT54S	GRABT54F
GRABT60R	GRABT60S	GRABT60F

DESIGN CONSIDERATIONS

32" High - 22¼" Deep

- The G-Series hood is designed for 8-foot ceilings
- Choose Rolled, Scooped or Flat profile for the valance. Then select Beaded, Traditional or Shaker.
- Optional corbels can be installed below the hood
- Call Technical assistance at 800.551.3404 for modifications.
- Add 2¼" to width of hood for moulding projection
- Chimney is trimmable
- Dimensions do not include moulding projections which add 1⅛" per side and front

HOW TO ORDER

- Nomenclature indicates width.
- When ordering the baffle style liner, increase the base height of the GRABT hood by 1". This is a no charge option.
- Available with a removable panel. Specify **REMPL** in Special Information Section. The removable panel changes the look of this hood. See Illustration.
- Order corbels separately
- Order blowers, fans and liners directly from Stanisci Designs. www.wood-hood.com, 248-572-6880
- Cannot be placed on rush schedule.
- Pricing P-108

© Copyright StarMark Cabinetry MARCH 2021

ADIP PROFILES

For block 2670

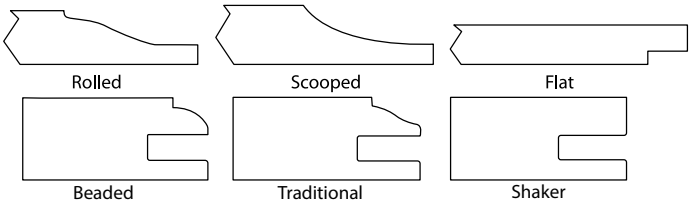

There is an extended lead time for Stanisci wood hoods. See your Cycle Ship for more information. We distribute Cycle Ship approximately every six weeks.

- Stanisci hoods are available in Alder, Rustic Alder, Cherry, Hickory, Maple, Red Oak and Walnut. All other species must be quoted. Verify availability of specie to be quoted.
- To determine proper installation height of hood, consult the hood and appliance manufacturer specifications, as well as your local codes.

Block 2670 Stanisci Wood Hood H-Series

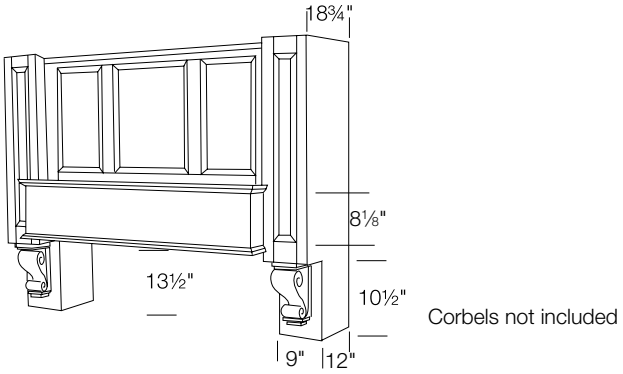

H-Series, 44" High

Rolled	Scooped	Flat
H5444R	H5444S	H5444F
H6044R	H6044S	H6044F
H6644R	H6644S	H6644F

H-Series, 56" High

Rolled	Scooped	Flat
H5456R	H5456S	H5456F
H6056R	H6056S	H6056F
H6656R	H6656S	H6656F

H-Series, 50" High

Rolled	Scooped	Flat
H5450R	H5450S	H5450F
H6050R	H6050S	H6050F
H6650R	H6650S	H6650F

DESIGN CONSIDERATIONS

44", 50", 56" High - 18¾" Deep

- The H-Series hood is designed to mount between two cabinets
- Choose Rolled, Scooped or Flat profile for panels. Then select Beaded, Traditional or Shaker.
- Accepts medium corbels and onlays
- Inside dimension is 18" less than width
- Corbels shown in illustration are not included
- Shelf is 8⅛" deep
- End panels are finished
- Call Technical assistance at 800.551.3404 for modifications.
- 54" and 60" wide hood have 2 panels. 66" wide has 3 panels (shown in illustration).

HOW TO ORDER

- Nomenclature indicates width by height.
- Order corbels, onlays and other decorative accents separately
- Order blowers, fans and liners directly from Stanisci Designs. www.wood-hood.com, 248-572-6880
- Cannot be placed on rush schedule.
- Pricing P-109

INSTALLATION TIP

- The panel removes for easier installation.

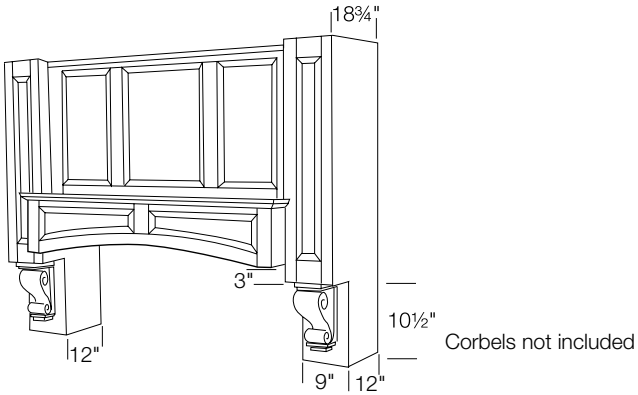

H-Series, 44" High

Rolled	Scooped	Flat
HRA5444R	HRA5444S	HRA5444F
HRA6044R	HRA6044S	HRA6044F
HRA6644R	HRA6644S	HRA6644F

H-Series, 56" High

Rolled	Scooped	Flat
HRA5456R	HRA5456S	HRA5456F
HRA6056R	HRA6056S	HRA6056F
HRA6656R	HRA6656S	HRA6656F

H-Series, 50" High

Rolled	Scooped	Flat
HRA5450R	HRA5450S	HRA5450F
HRA6050R	HRA6050S	HRA6050F
HRA6650R	HRA6650S	HRA6650F

DESIGN CONSIDERATIONS

44", 50", 56" High - 18¾" Deep

- The H-Series hood is designed to mount between two cabinets
- Choose Rolled, Scooped or Flat profile for the valance and panels. Then select Beaded, Traditional or Shaker.
- Accepts medium corbels and onlays
- Corbels shown in illustration are not included
- Shelf is 8⅛" deep
- End panels are finished
- Call Technical assistance at 800.551.3404 for modifications.
- 54" and 60" wide hood have 2 panels. 66" wide has 3 panels (shown in illustration).

HOW TO ORDER

- Nomenclature indicates width by height.
- When ordering the baffle style liner, increase the base height of the HRA hood by 1". This is a no charge option.
- Order corbels, onlays and other decorative accents separately
- Order blowers, fans and liners directly from Stanisci Designs. www.wood-hood.com, 248-572-6880
- Cannot be placed on rush schedule.
- Pricing P-109

INSTALLATION TIP

- The panel removes for easier installation.

© Copyright StarMark Cabinetry MARCH 2021

Block 2670 Stanisci Wood Hood I-Series

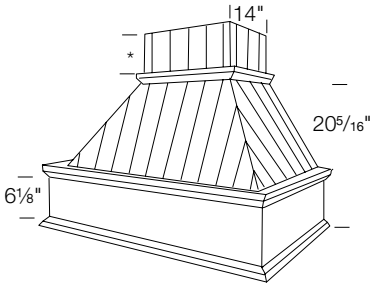

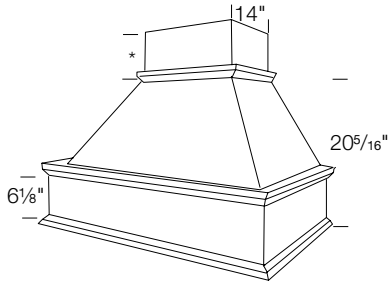

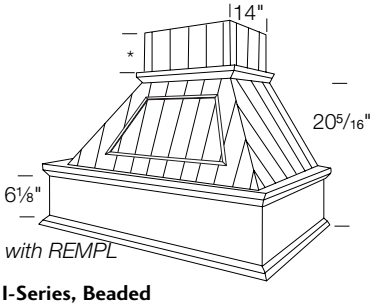

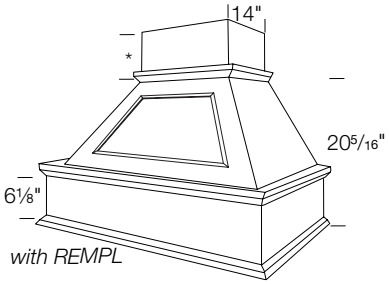

DESIGN CONSIDERATIONS

24 1/8" Deep

- The I-Series hood is ceiling mounted above an island or peninsula
- Tapered portion of hood is 20 5/16" high
- Accepts onlays
- Not trimmable
- Island hood should be 6" wider than the cooking surface
- Call Technical assistance at 800.551.3404 for modifications.
- Dimensions do not include moulding projections which add 1 1/8" per side and front and back

HOW TO ORDER

- Nomenclature indicates width
- Available with a removable panel. Specify **REMPL** in Special Information Section. The removable panel changes the look of this hood. See Illustration.
- Specify height
- * Height is added to chimney portion of hood
- Order corbels, onlays and other decorative accents separately
- Order blowers, fans and liners directly from Stanisci Designs. www.wood-hood.com, 248-572-6880
- Cannot be placed on rush schedule.
- Pricing P-110

I-Series, Beaded	I-Series, Plain
IBT36PB	**I36P**
IBT42PB	**I42P**
IBT48PB	**I48P**
IBT54PB	**I54P**
IBT60PB	**I60P**

Block 2670 Stanisci Wood Hood J-Series

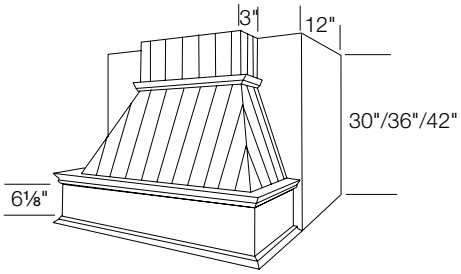

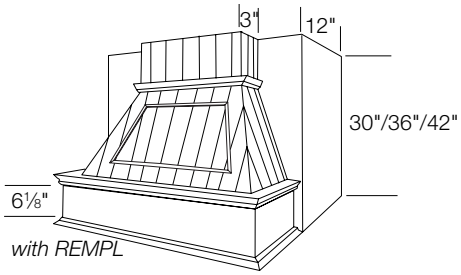

DESIGN CONSIDERATIONS

30", 36", 42" High - 23 3/8" Deep

- The J-Series hood is designed to mount between two cabinets
- Accepts onlays
- Optional corbels can be installed below the hood
- Box for mounting included, box is finished
- Hood must be 3" wider than range
- Call Technical assistance at 800.551.3404 for modifications.

HOW TO ORDER

- Nomenclature indicates width by height.
- Available with a removable panel. Specify **REMPL** in Special Information Section. The removable panel changes the look of this hood. See Illustration.
- Order corbels, onlays and other decorative accents separately
- Order blowers, fans and liners directly from Stanisci Designs. www.wood-hood.com, 248-572-6880
- Cannot be placed on rush schedule.
- Pricing P-110--111

J-Series, Beaded

30" High	36" High	42" High
JBT3330PB	**JBT3336PB**	**JBT3342PB**
JBT3930PB	**JBT3936PB**	**JBT3942PB**
JBT4530PB	**JBT4536PB**	**JBT4542PB**
JBT5130PB	**JBT5136PB**	**JBT5142PB**
JBT5730PB	**JBT5736PB**	**JBT5742PB**
JBT6330PB	**JBT6336PB**	**JBT6342PB**

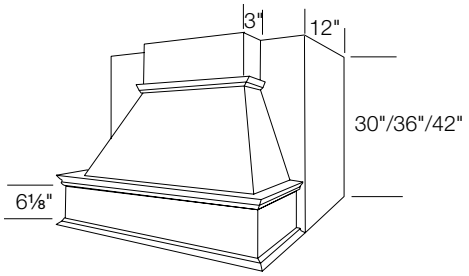

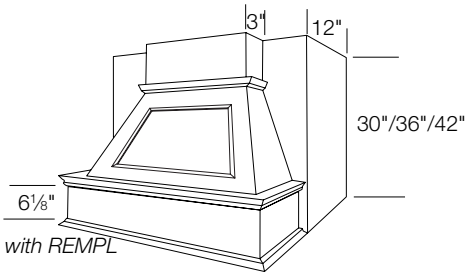

J-Series, Plain

30" High	36" High	42" High
J3330P	**J3336P**	**J3342P**
J3930P	**J3936P**	**J3942P**
J4530P	**J4536P**	**J4542P**
J5130P	**J5136P**	**J5142P**
J5730P	**J5736P**	**J5742P**
J6330P	**J6336P**	**J6342P**

© Copyright StarMark Cabinetry MARCH 2021

ADIP PROFILES

For block 2670

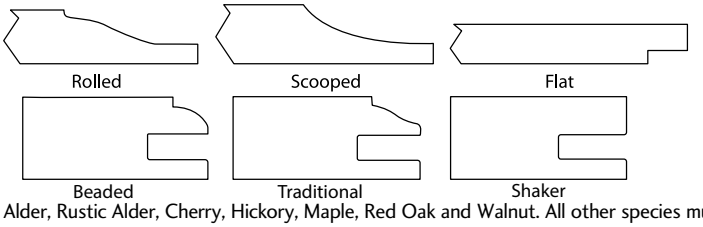

There is an extended lead time for Stanisci wood hoods. See your Cycle Ship for more information. We distribute Cycle Ship approximately every six weeks.

- Stanisci hoods are available in Alder, Rustic Alder, Cherry, Hickory, Maple, Red Oak and Walnut. All other species must be quoted. Verify availability of specie to be quoted.
- To determine proper installation height of hood, consult the hood and appliance manufacturer specifications, as well as your local codes.

Block 2670 Stanisci Wood Hood J-Series

continued

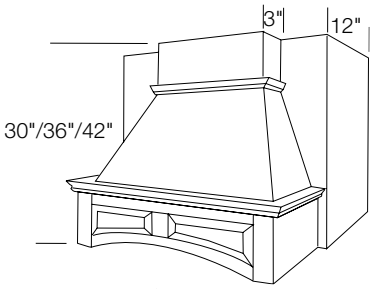

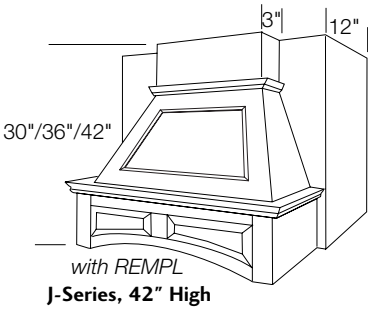

J-Series, 30" High

Rolled	Scooped	Flat
JRA3330R	JRA3330S	JRA3330F
JRA3930R	JRA3930S	JRA3930F
JRA4530R	JRA4530S	JRA4530F
JRA5130R	JRA5130S	JRA5130F
JRA5730R	JRA5730S	JRA5730F
JRA6330R	JRA6330S	JRA6330F

J-Series, 42" High

Rolled	Scooped	Flat
JRA3342R	JRA3342S	JRA3342F
JRA3942R	JRA3942S	JRA3942F
JRA4542R	JRA4542S	JRA4542F
JRA5142R	JRA5142S	JRA5142F
JRA5742R	JRA5742S	JRA5742F
JRA6342R	JRA6342S	JRA6342F

J-Series, 36" High

Rolled	Scooped	Flat
JRA3336R	JRA3336S	JRA3336F
JRA3936R	JRA3936S	JRA3936F
JRA4536R	JRA4536S	JRA4536F
JRA5136R	JRA5136S	JRA5136F
JRA5736R	JRA5736S	JRA5736F
JRA6336R	JRA6336S	JRA6336F

DESIGN CONSIDERATIONS

30", 36", 42" High - 23⅜" Deep

- The J-Series hood is designed to mount between two cabinets
- Choose Rolled, Scooped or Flat profile for the valance. Then select Beaded, Traditional or Shaker.
- Optional corbels can be installed below the hood
- Box for mounting included, box is finished
- Hood must be 3" wider than range
- Call Technical assistance at 800.551.3404 for modifications.

HOW TO ORDER

- Nomenclature indicates width by height.
- When ordering the baffle style liner, increase the base height of the JRA and JRABT hood by 1". This is a no charge option.
- Available with a removable panel. Specify **REMPL** in Special Information The removable panel changes the look of this hood. See Illustration.
- Order corbels separately
- Order blowers, fans and liners directly from Stanisci Designs. www.wood-hood.com, 248-572-6880
- Cannot be placed on rush schedule.
- Pricing P-112-113

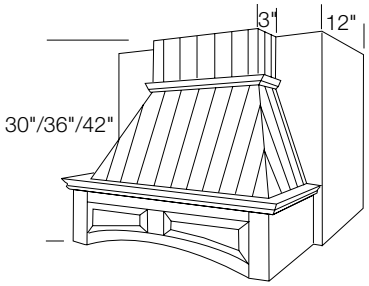

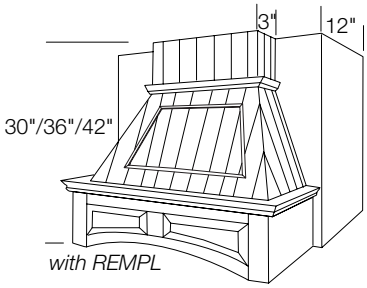

J-Series, 30" High

Rolled	Scooped	Flat
JRABT3330R	JRABT3330S	JRABT3330F
JRABT3930R	JRABT3930S	JRABT3930F
JRABT4530R	JRABT4530S	JRABT4530F
JRABT5130R	JRABT5130S	JRABT5130F
JRABT5730R	JRABT5730S	JRABT5730F
JRABT6330R	JRABT6330S	JRABT6330F

J-Series, 42" High

Rolled	Scooped	Flat
JRABT3342R	JRABT3342S	JRABT3342F
JRABT3942R	JRABT3942S	JRABT3942F
JRABT4542R	JRABT4542S	JRABT4542F
JRABT5142R	JRABT5142S	JRABT5142F
JRABT5742R	JRABT5742S	JRABT5742F
JRABT6342R	JRABT6342S	JRABT6342F

J-Series, 36" High

Rolled	Scooped	Flat
JRABT3336R	JRABT3336S	JRABT3336F
JRABT3936R	JRABT3936S	JRABT3936F
JRABT4536R	JRABT4536S	JRABT4536F
JRABT5136R	JRABT5136S	JRABT5136F
JRABT5736R	JRABT5736S	JRABT5736F
JRABT6336R	JRABT6336S	JRABT6336F

© Copyright StarMark Cabinetry MARCH 2021

ADIP PROFILES

For block 2670

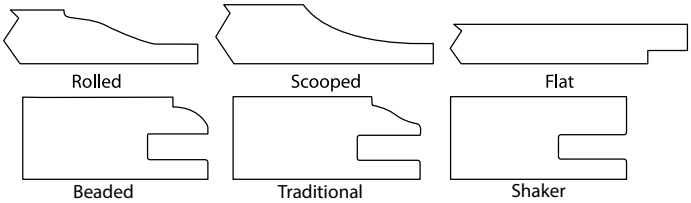

There is an extended lead time for Stanisci wood hoods. See your Cycle Ship for more information. We distribute Cycle Ship approximately every six weeks.

- Stanisci hoods are available in Alder, Rustic Alder, Cherry, Hickory, Maple, Red Oak and Walnut. All other species must be quoted. Verify availability of specie to be quoted.
- To determine proper installation height of hood, consult the hood and appliance manufacturer specifications, as well as your local codes.

Block 2670 Stanisci Wood Hood J-Series

continued

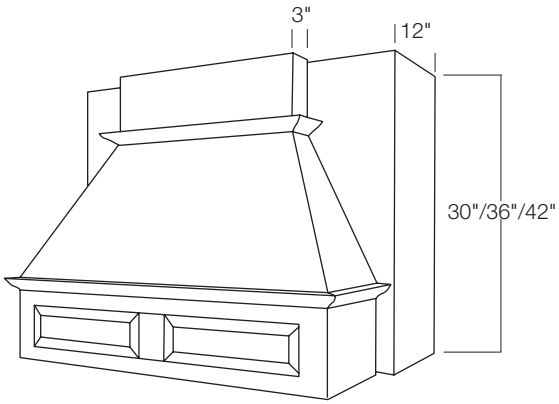

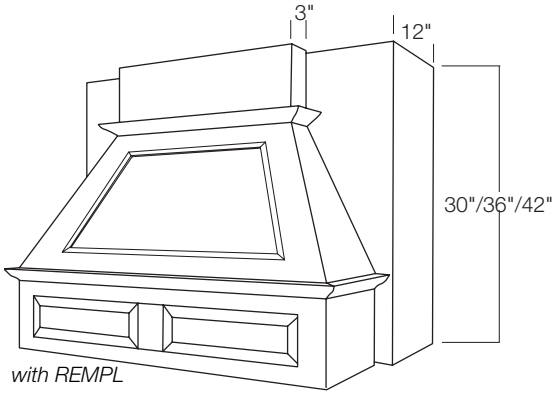

with REMPL

J Series, 30″ High

Rolled	Scooped	Flat
JRS3330R	JRS3330S	JRS3330F
JRS3930R	JRS3930S	JRS3930F
JRS4530R	JRS4530S	JRS4530F
JRS5130R	JRS5130S	JRS5130F
JRS5730R	JRS5730S	JRS5730F
JRS6330R	JRS6330S	JRS6330F

Series J, 36″ High

Rolled	Scooped	Flat
JRS3336R	JRS3336S	JRS3336F
JRS3936R	JRS3936S	JRS3936F
JRS4536R	JRS4536S	JRS4536F
JRS5136R	JRS5136S	JRS5136F
JRS5736R	JRS5736S	JRS5736F
JRS6336R	JRS6336S	JRS6336F

Series J, 42″ High

Rolled	Scooped	Flat
JRS3342R	JRS3342S	JRS3342F
JRS3942R	JRS3942S	JRS3942F
JRS4542R	JRS4542S	JRS4542F
JRS5142R	JRS5142S	JRS5142F
JRS5742R	JRS5742S	JRS5742F
JRS6342R	JRS6342S	JRS6342F

DESIGN CONSIDERATIONS

30″, 36″, 42″ High - 23⅜″ Deep

- The J-Series hood is designed to mount between two cabinets
- Choose Rolled, Scooped or Flat profile for the valance. Then select Beaded, Traditional or Shaker.
- Optional corbels can be installed below the hood
- Box for mounting included, box is finished
- Hood must be 3″ wider than range
- Call Technical assistance at 800.551.3404 for modifications.

HOW TO ORDER

- Nomenclature indicates width by height.
- Available with a removable panel. Specify **REMPL** in Special Information Section. The removable panel changes the look of this hood. See Illustration.
- Order corbels separately
- Order blowers, fans and liners directly from Stanisci Designs. www.wood-hood.com, 248-572-6880
- Cannot be placed on rush schedule.
- Pricing P-113

© Copyright StarMark Cabinetry MARCH 2021

Block 2670 Stanisci Wood Hood J-Series

continued I

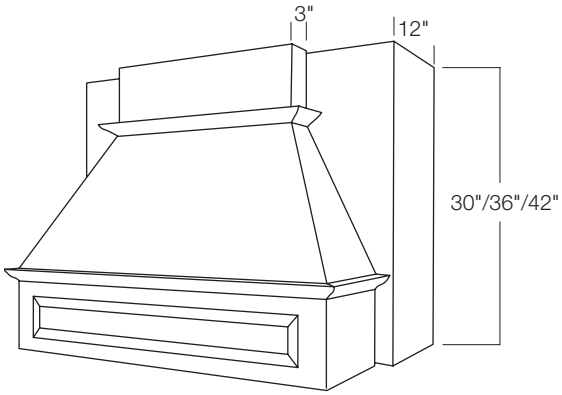

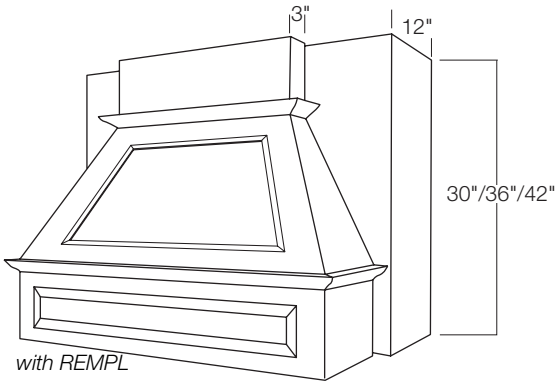

Series J, 30″ High

Rolled	Scooped	Flat
JRSS3330R	JRSS3330S	JRSS3330F
JRSS3930R	JRSS3930S	JRSS3930F
JRSS4530R	JRSS4530S	JRSS4530F
JRSS5130R	JRSS5130S	JRSS5130F
JRSS5730R	JRSS5730S	JRSS5730F
JRSS6330R	JRSS6330S	JRSS6330F

Series J, 42″ High

Rolled	Scooped	Flat
JRSS3342R	JRSS3342S	JRSS3342F
JRSS3942R	JRSS3942S	JRSS3942F
JRSS4542R	JRSS4542S	JRSS4542F
JRSS5142R	JRSS5142S	JRSS5142F
JRSS5742R	JRSS5742S	JRSS5742F
JRSS6342R	JRSS6342S	JRSS6342F

Series J, 36″ High

Rolled	Scooped	Flat
JRSS3336R	JRSS3336S	JRSS3336F
JRSS3936R	JRSS3936S	JRSS3936F
JRSS4536R	JRSS4536S	JRSS4536F
JRSS5136R	JRSS5136S	JRSS5136F
JRSS5736R	JRSS5736S	JRSS5736F
JRSS6336R	JRSS6336S	JRSS6336F

DESIGN CONSIDERATIONS

30″, 36″, 42″ High - 23⅜″ Deep

- The J-Series hood is designed to mount between two cabinets
- Choose Rolled, Scooped or Flat profile for the valance. Then select Beaded, Traditional or Shaker.
- Optional corbels can be installed below the hood
- Box for mounting included, box is finished
- Hood must be 3″ wider than range
- Call Technical assistance at 800.551.3404 for modifications.

HOW TO ORDER

- Nomenclature indicates width by height.
- Available with a removable panel. Specify **REMPL** in Special Information Section. The removable panel changes the look of this hood. See Illustration.
- Order corbels separately
- Order blowers, fans and liners directly from Stanisci Designs. www.wood-hood.com, 248-572-6880
- Cannot be placed on rush schedule.
- Pricing P-113

Block 2670 Stanisci Wood Hood L-Series

I

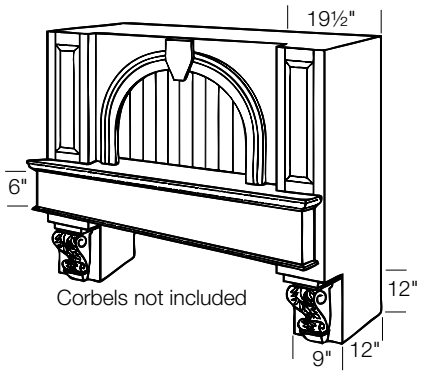

L-Series, 44″ High

Rolled	Scooped	Flat
L5444R	L5444S	L5444F
L6044R	L6044S	L6044F
L6644R	L6644S	L6644F

L-Series, 56″ High

Rolled	Scooped	Flat
L5456R	L5456S	L5456F
L6056R	L6056S	L6056F
L6656R	L6656S	L6656F

L-Series, 50″ High

Rolled	Scooped	Flat
L5450R	L5450S	L5450F
L6050R	L6050S	L6050F
L6650R	L6650S	L6650F

DESIGN CONSIDERATIONS

44″, 50″, 56″ High - 24½″ Deep

- The L-Series hood is designed to mount between two cabinets
- Choose Rolled, Scooped or Flat profile for the panels. Then select Beaded, Traditional or Shaker.
- Accepts medium corbels and onlays
- Corbels shown in illustration are not included
- 9⅞″ deep shelf
- The recess in the display niche allows for 3″ puck lights
- End panels are finished
- Call Technical assistance at 800.551.3404 for modifications.

HOW TO ORDER

- Nomenclature indicates width by height.
- Order corbels, onlays and other decorative accents separately
- Order blowers, fans and liners directly from Stanisci Designs. www.wood-hood.com, 248-572-6880
- Cannot be placed on rush schedule.
- Pricing P-113

INSTALLATION TIP

- The beaded panel removes for easier installation.

© Copyright StarMark Cabinetry MARCH 2021

Block 2670 Stanisci Wood Hood M-Series

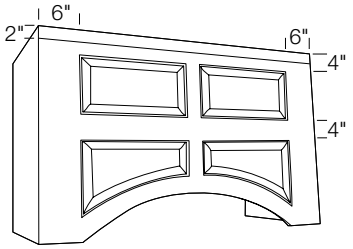

M-Series, 24" High

Rolled	Scooped	Flat
M3024R	M3024S	M3024F
M3624R	M3624S	M3624F
M4224R	M4224S	M4224F
M4824R	M4824S	M4824F
M5424R	M5424S	M5424F
M6024R	M6024S	M6024F

M-Series, 36" High

Rolled	Scooped	Flat
M3036R	M3036S	M3036F
M3636R	M3636S	M3636F
M4236R	M4236S	M4236F
M4836R	M4836S	M4836F
M5436R	M5436S	M5436F
M6036R	M6036S	M6036F

M-Series, 30" High

Rolled	Scooped	Flat
M3030R	M3030S	M3030F
M3630R	M3630S	M3630F
M4230R	M4230S	M4230F
M4830R	M4830S	M4830F
M5430R	M5430S	M5430F
M6030R	M6030S	M6030F

M-Series, 42" High

Rolled	Scooped	Flat
M3042R	M3042S	M3042F
M3642R	M3642S	M3642F
M4242R	M4242S	M4242F
M4842R	M4842S	M4842F
M5442R	M5442S	M5442F
M6042R	M6042S	M6042F

DESIGN CONSIDERATIONS

24", 30", 36", 42" High - 22¼" Deep

- Choose Rolled, Scooped or Flat profile. Then select Beaded, Traditional or Shaker.
- Adding optional plinth shelf with corbels below creates a completely different look.
- Accepts small corbels
- Call Technical assistance at 800.551.3404 for modifications.
- Interior is finished to top of arch.
- End panels are finished

HOW TO ORDER

- Nomenclature indicates width by height.
- Available with a removable panel. Specify **REMPL** in Special Information Section.
- Order corbels and plinth shelf separately
- Order blowers, fans and liners directly from Stanisci Designs. www.wood-hood.com, 248-572-6880
- Cannot be placed on rush schedule.
- Pricing P-114

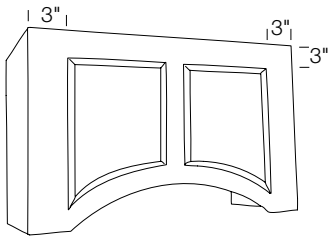

M-Series, 24" High

Rolled	Scooped	Flat
MDDP3024R	MDDP3024S	MDDP3024F
MDDP3624R	MDDP3624S	MDDP3624F
MDDP4224R	MDDP4224S	MDDP4224F
MDDP4824R	MDDP4824S	MDDP4824F
MDDP5424R	MDDP5424S	MDDP5424F
MDDP6024R	MDDP6024S	MDDP6024F

M-Series, 36" High

Rolled	Scooped	Flat
MDDP3036R	MDDP3036S	MDDP3036F
MDDP3636R	MDDP3636S	MDDP3636F
MDDP4236R	MDDP4236S	MDDP4236F
MDDP4836R	MDDP4836S	MDDP4836F
MDDP5436R	MDDP5436S	MDDP5436F
MDDP6036R	MDDP6036S	MDDP6036F

M-Series, 30" High

Rolled	Scooped	Flat
MDDP3030R	MDDP3030S	MDDP3030F
MDDP3630R	MDDP3630S	MDDP3630F
MDDP4230R	MDDP4230S	MDDP4230F
MDDP4830R	MDDP4830S	MDDP4830F
MDDP5430R	MDDP5430S	MDDP5430F
MDDP6030R	MDDP6030S	MDDP6030F

M-Series, 42" High

Rolled	Scooped	Flat
MDDP3042R	MDDP3042S	MDDP3042F
MDDP3642R	MDDP3642S	MDDP3642F
MDDP4242R	MDDP4242S	MDDP4242F
MDDP4842R	MDDP4842S	MDDP4842F
MDDP5442R	MDDP5442S	MDDP5442F
MDDP6042R	MDDP6042S	MDDP6042F

DESIGN CONSIDERATIONS

24", 30", 36", 42" High - 22¼" Deep

- Choose Rolled, Scooped or Flat profile. Then select Beaded, Traditional or Shaker.
- Call Technical assistance at 800.551.3404 for modifications.
- Interior is finished to top of arch.
- End panels are finished

HOW TO ORDER

- Nomenclature indicates width by height.
- Order blowers, fans and liners directly from Stanisci Designs. www.wood-hood.com, 248-572-6880
- Cannot be placed on rush schedule.
- Pricing P-115

© Copyright StarMark Cabinetry MARCH 2021

ADIP PROFILES

For block 2670

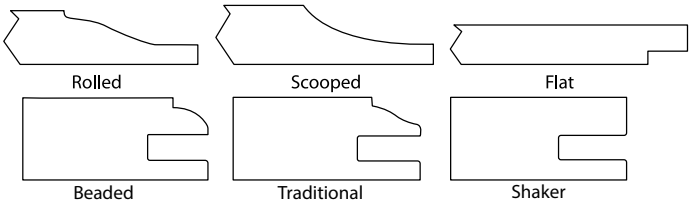

There is an extended lead time for Stanisci wood hoods. See your Cycle Ship for more information. We distribute Cycle Ship approximately every six weeks.

- Stanisci hoods are available in Alder, Rustic Alder, Cherry, Hickory, Maple, Red Oak and Walnut. All other species must be quoted. Verify availability of specie to be quoted.
- To determine proper installation height of hood, consult the hood and appliance manufacturer specifications, as well as your local codes.

Block 2670 Stanisci Wood Hood N-Series

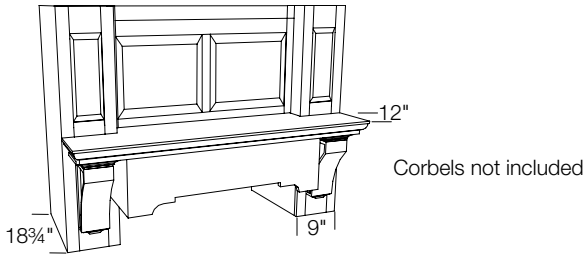

N-Series, 32″ High

Rolled	Scooped	Flat
NDP15432R	NDP15432S	NDP15432F
NDP16032R	NDP16032S	NDP16032F
NDP16632R	NDP16632S	NDP16632F

N-Series, 38″ High

Rolled	Scooped	Flat
NDP15438R	NDP15438S	NDP15438F
NDP16038R	NDP16038S	NDP16038F
NDP16638R	NDP16638S	NDP16638F

N-Series, 44″ High

Rolled	Scooped	Flat
NDP15444R	NDP15444S	NDP15444F
NDP16044R	NDP16044S	NDP16044F
NDP16644R	NDP16644S	NDP16644F

DESIGN CONSIDERATIONS

32″, 38″, 44″ High - 18¾″ Deep

- The N-Series hood is designed to mount between two cabinets
- End panels are finished
- Choose Rolled, Scooped or Flat profile for the valance and panels. Then select Beaded, Traditional or Shaker.
- 12″ deep shelf
- Corbels shown in illustration are not included
- Call Technical assistance at 800.551.3404 for modifications.
- 54″ and 60″ wide hood have 2 panels (shown in illustration). 66″ wide has 3 panels.

HOW TO ORDER

- Nomenclature indicates width by height.
- Order corbels, onlays and other decorative accents separately
- Order blowers, fans and liners directly from Stanisci Designs. www.wood-hood.com, 248-572-6880
- Cannot be placed on rush schedule.
- Pricing P-116

INSTALLATION TIP

- The panel removes for easier installation.

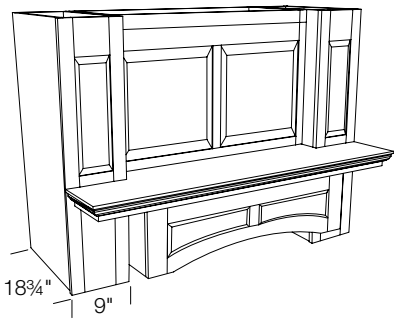

N-Series, 32″ High

Rolled	Scooped	Flat
NRA5432R	NRA5432S	NRA5432F
NRA6032R	NRA6032S	NRA6032F
NRA6632R	NRA6632S	NRA6632F

N-Series, 38″ High

Rolled	Scooped	Flat
NRA5438R	NRA5438S	NRA5438F
NRA6038R	NRA6038S	NRA6038F
NRA6638R	NRA6638S	NRA6638F

N-Series, 44″ High

Rolled	Scooped	Flat
NRA5444R	NRA5444S	NRA5444F
NRA6044R	NRA6044S	NRA6044F
NRA6644R	NRA6644S	NRA6644F

DESIGN CONSIDERATIONS

32″, 38″, 44″ High - 18¾″ Deep

- The N-Series hood is designed to mount between two cabinets
- End panels are finished
- Choose Rolled, Scooped or Flat profile for the valance and panels. Then select Beaded, Traditional or Shaker.
- 12″ deep shelf
- Corbels shown in illustration are not included
- Call Technical assistance at 800.551.3404 for modifications.
- 54″ and 60″ wide hood have 2 panels (shown in illustration). 66″ wide has 3 panels.

HOW TO ORDER

- Nomenclature indicates width by height.
- Order corbels, onlays and other decorative accents separately
- Order blowers, fans and liners directly from Stanisci Designs. www.wood-hood.com, 248-572-6880
- Cannot be placed on rush schedule.
- Pricing P-116

INSTALLATION TIP

- The panel removes for easier installation.

© Copyright StarMark Cabinetry MARCH 2021

ADIP PROFILES

For block 2670

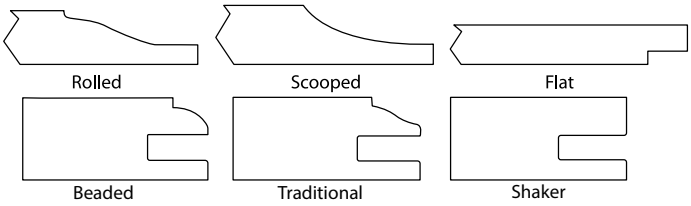

There is an extended lead time for Stanisci wood hoods. See your Cycle Ship for more information. We distribute Cycle Ship approximately every six weeks.

- Stanisci hoods are available in Alder, Rustic Alder, Cherry, Hickory, Maple, Red Oak and Walnut. All other species must be quoted. Verify availability of specie to be quoted.
- To determine proper installation height of hood, consult the hood and appliance manufacturer specifications, as well as your local codes.

Block 2670 Stanisci Wood Hood O-Series

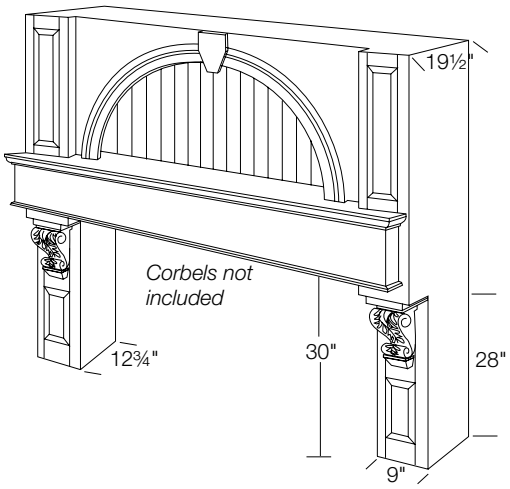

O-Series, 60" High

Rolled	Scooped	Flat
SO6660RWSR	SO6660SWSR	SO6660FWSR
SO7260RWSR	SO7260SWSR	SO7260FWSR
SO8460RWSR	SO8460SWSR	SO8460FWSR
SO9060RWSR	SO9060SWSR	SO9060FWSR

O-Series, 72" High

Rolled	Scooped	Flat
SO6672RWSR	SO6672SWSR	SO6672FWSR
SO7272RWSR	SO7272SWSR	SO7272FWSR
SO8472RWSR	SO8472SWSR	SO8472FWSR
SO9072RWSR	SO9072SWSR	SO9072FWSR

O-Series, 84" High

Rolled	Scooped	Flat
SO6684RWSR	SO6684SWSR	SO6684FWSR
SO7284RWSR	SO7284SWSR	SO7284FWSR
SO8484RWSR	SO8484SWSR	SO8484FWSR
SO9084RWSR	SO9084SWSR	SO9084FWSR

DESIGN CONSIDERATIONS

60", 72", 84" High - 19½" Deep

- The O-Series hood is designed to mount between two cabinets
- End panels are finished
- Choose Rolled, Scooped or Flat profile for the towers. Then select Beaded, Traditional or Shaker.
- Accepts corbels and onlays
- Tower portions are 9" wide and 12¾" deep
- The recess in the display niche allows for 3" puck lights
- Pullout shelves in lower tower units are Maple with chrome accents. They extend fully.
- Pullout unit includes two adjustable shelves and one fixed shelf
- Mantel shelf is 10⅛" deep
- Call Technical assistance at 800.551.3404 for modifications.

HOW TO ORDER

- Nomenclature indicates width by height.
- Order corbels, onlays and other decorative accents separately
- Order blowers, fans and liners directly from Stanisci Designs. www.wood-hood.com, 248-572-6880
- Cannot be placed on rush schedule.
- Pricing P-117

INSTALLATION TIP

- The beaded panel removes for easier installation.
- Towers come down to countertop. Ensure that there is enough clearance between the towers and the cooking surface to pass local code.

© Copyright StarMark Cabinetry MARCH 2021

Block 2670 Stanisci Wood Hood P-Series

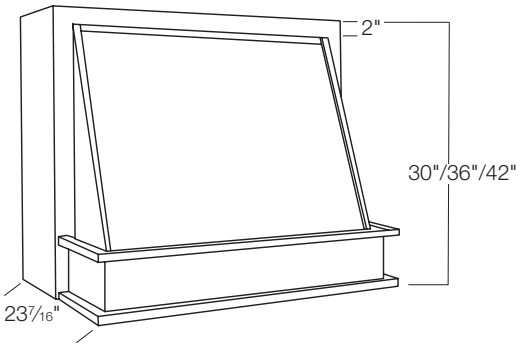

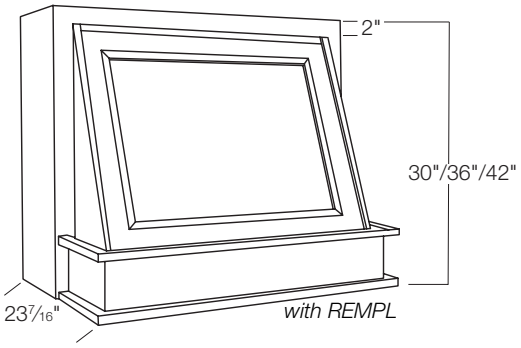

Series P

30" High	36" High	42" High
SP3330	**SP3336**	**SP3342**
SP3930	**SP3936**	**SP3942**
SP4530	**SP4536**	**SP4542**
SP5130	**SP5136**	**SP5142**
SP5730	**SP5736**	**SP5742**
SP6330	**SP6336**	**SP6342**

DESIGN CONSIDERATIONS

30", 36", 42" High - 23 7/16" Deep

- The P-Series hood is designed to mount between two cabinets
- End panels are finished
- Box depth in 12"
- Accepts onlays
- Optional corbels can be installed below the hood
- Call Technical assistance at 800.551.3404 for modifications.

HOW TO ORDER

- Nomenclature indicates width by height.
- When ordering the baffle style liner, increase the base height of the SP hood by 2¾". This is a no charge option.
- Available with a removable panel. Specify **REMPL** in Special Information Section. The removable panel changes the look of this hood. See Illustration.
- Order corbels, onlays and other decorative accents separately
- Order blowers, fans and liners directly from Stanisci Designs. www.wood-hood.com, 248-572-6880
- Cannot be placed on rush schedule.
- Pricing P-117

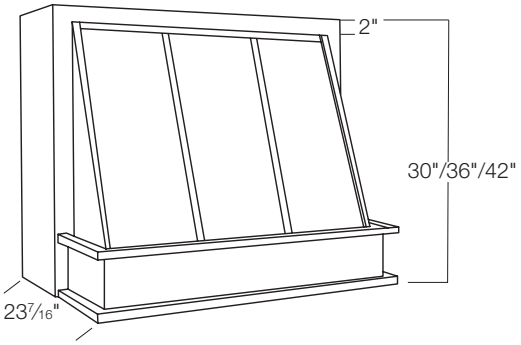

Series P

30" High	36" High	42" High
SP3330BAT	**SP3336BAT**	**SP3342BAT**
SP3930BAT	**SP3936BAT**	**SP3942BAT**
SP4530BAT	**SP4536BAT**	**SP4542BAT**
SP5130BAT	**SP5136BAT**	**SP5142BAT**
SP5730BAT	**SP5736BAT**	**SP5742BAT**
SP6330BAT	**SP6336BAT**	**SP6342BAT**

DESIGN CONSIDERATIONS

30", 36", 42" High - 23 7/16" Deep

- The P-Series hood is designed to mount between two cabinets
- End panels are finished
- Box depth in 12"
- Accepts onlays
- Optional corbels can be installed below the hood
- Call Technical assistance at 800.551.3404 for modifications.
- 33", 39" and 45" wide hoods have 2 battens
- 51", 57" and 63" wide hoods have 3 battens

HOW TO ORDER

- Nomenclature indicates width by height.
- When ordering the baffle style liner, increase the base height of the SP_BAT hood by 2¾". This is a no charge option.
- Order corbels, onlays and other decorative accents separately
- Order blowers, fans and liners directly from Stanisci Designs. www.wood-hood.com, 248-572-6880
- Cannot be placed on rush schedule.
- Pricing P-118

© Copyright StarMark Cabinetry MARCH 2021

ADIP PROFILES

For block 2670

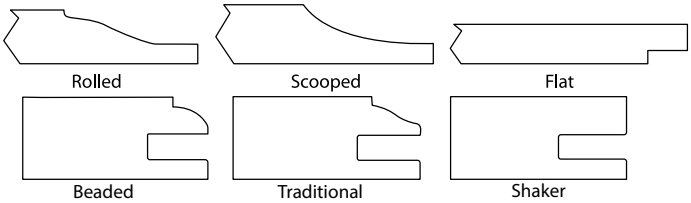

There is an extended lead time for Stanisci wood hoods. See your Cycle Ship for more information. We distribute Cycle Ship approximately every six weeks.

- Stanisci hoods are available in Alder, Rustic Alder, Cherry, Hickory, Maple, Red Oak and Walnut. All other species must be quoted. Verify availability of specie to be quoted.
- To determine proper installation height of hood, consult the hood and appliance manufacturer specifications, as well as your local codes.

Block 2670 Stanisci Wood Hood Q-Series

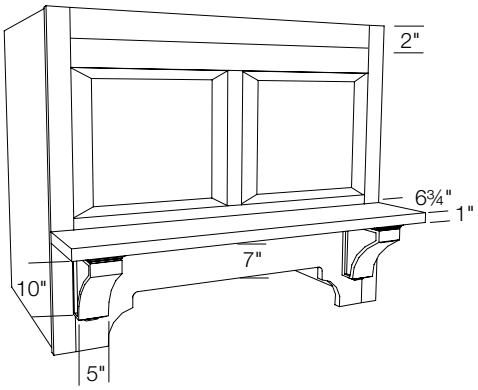

DESIGN CONSIDERATIONS

24", 30", 36", 42", 48" High - 22¼" Deep

- The Q-Series hood is designed to mount between two cabinets
- End panels are finished
- Choose Rolled, Scooped or Flat profile for the panels. Then select Beaded, Traditional or Shaker.
- Accepts select size onlays
- Arts and Crafts corbels and shelf are included on this hood
- For all widths, corbels are located 9/16" from the hood edge
- Shelf is 6¾" deep
- Call Technical assistance at 800.551.3404 for modifications.

HOW TO ORDER

- Nomenclature indicates width by height.
- Available with a removable panel. Specify **REMPL** in Special Information Section.
- Order onlays and other decorative accents separately
- Order blowers, fans and liners directly from Stanisci Designs. www.wood-hood.com, 248-572-6880
- Cannot be placed on rush schedule.
- Pricing P-119

Q-Series, 24" High

Rolled	Scooped	Flat
QART3024R	QART3024S	QART3024F
QART3624R	QART3624S	QART3624F
QART4224R	QART4224S	QART4224F
QART4824R	QART4824S	QART4824F
QART5424R	QART5424S	QART5424F
QART6024R	QART6024S	QART6024F

Q-Series, 42" High

Rolled	Scooped	Flat
QART3042R	QART3042S	QART3042F
QART3642R	QART3642S	QART3642F
QART4242R	QART4242S	QART4242F
QART4842R	QART4842S	QART4842F
QART5442R	QART5442S	QART5442F
QART6042R	QART6042S	QART6042F

Q-Series, 30" High

Rolled	Scooped	Flat
QART3030R	QART3030S	QART3030F
QART3630R	QART3630S	QART3630F
QART4230R	QART4230S	QART4230F
QART4830R	QART4830S	QART4830F
QART5430R	QART5430S	QART5430F
QART6030R	QART6030S	QART6030F

Q-Series, 48" High

Rolled	Scooped	Flat
QART3048R	QART3048S	QART3048F
QART3648R	QART3648S	QART3648F
QART4248R	QART4248S	QART4248F
QART4848R	QART4848S	QART4848F
QART5448R	QART5448S	QART5448F
QART6048R	QART6048S	QART6048F

Q-Series, 36" High

Rolled	Scooped	Flat
QART3036R	QART3036S	QART3036F
QART3636R	QART3636S	QART3636F
QART4236R	QART4236S	QART4236F
QART4836R	QART4836S	QART4836F
QART5436R	QART5436S	QART5436F
QART6036R	QART6036S	QART6036F

© Copyright StarMark Cabinetry MARCH 2021

Block 2670 Stanisci Wood Hood Q-Series

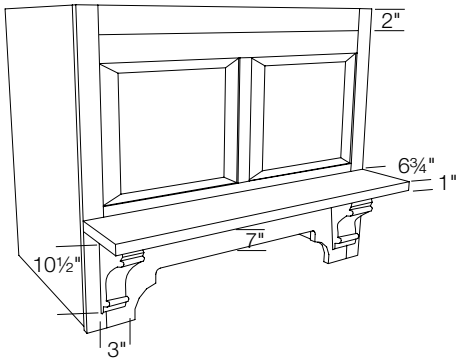

Q-Series, 24" High

Rolled	Scooped	Flat
QPRS3024R	QPRS3024S	QPRS3024F
QPRS3624R	QPRS3624S	QPRS3624F
QPRS4224R	QPRS4224S	QPRS4224F
QPRS4824R	QPRS4824S	QPRS4824F
QPRS5424R	QPRS5424S	QPRS5424F
QPRS6024R	QPRS6024S	QPRS6024F

Q-Series, 42" High

Rolled	Scooped	Flat
QPRS3042R	QPRS3042S	QPRS3042F
QPRS3642R	QPRS3642S	QPRS3642F
QPRS4242R	QPRS4242S	QPRS4242F
QPRS4842R	QPRS4842S	QPRS4842F
QPRS5442R	QPRS5442S	QPRS5442F
QPRS6042R	QPRS6042S	QPRS6042F

Q-Series, 30" High

Rolled	Scooped	Flat
QPRS3030R	QPRS3030S	QPRS3030F
QPRS3630R	QPRS3630S	QPRS3630F
QPRS4230R	QPRS4230S	QPRS4230F
QPRS4830R	QPRS4830S	QPRS4830F
QPRS5430R	QPRS5430S	QPRS5430F
QPRS6030R	QPRS6030S	QPRS6030F

Q-Series, 48" High

Rolled	Scooped	Flat
QPRS3048R	QPRS3048S	QPRS3048F
QPRS3648R	QPRS3648S	QPRS3648F
QPRS4248R	QPRS4248S	QPRS4248F
QPRS4848R	QPRS4848S	QPRS4848F
QPRS5448R	QPRS5448S	QPRS5448F
QPRS6048R	QPRS6048S	QPRS6048F

Q-Series, 36" High

Rolled	Scooped	Flat
QPRS3036R	QPRS3036S	QPRS3036F
QPRS3636R	QPRS3636S	QPRS3636F
QPRS4236R	QPRS4236S	QPRS4236F
QPRS4836R	QPRS4836S	QPRS4836F
QPRS5436R	QPRS5436S	QPRS5436F
QPRS6036R	QPRS6036S	QPRS6036F

DESIGN CONSIDERATIONS

24", 30", 36", 42", 48" High - 22¼" Deep

- The Q-Series hood is designed to mount between two cabinets
- End panels are finished
- Choose Rolled, Scooped or Flat profile for the panels. Then select Beaded, Traditional or Shaker.
- Accepts select size onlays
- Provincial corbels and shelf are included on this hood
- For all widths, corbels are located 1" from the hood edge
- Shelf is 6¾" deep
- Call Technical assistance at 800.551.3404 for modifications.

HOW TO ORDER

- Nomenclature indicates width by height.
- Available with a removable panel. Specify **REMPL** in Special Information Section.
- Order onlays and other decorative accents separately
- Order blowers, fans and liners directly from Stanisci Designs. www.wood-hood.com, 248-572-6880
- Cannot be placed on rush schedule.
- Pricing P-120

© Copyright StarMark Cabinetry MARCH 2021

ADIP PROFILES

For block 2670

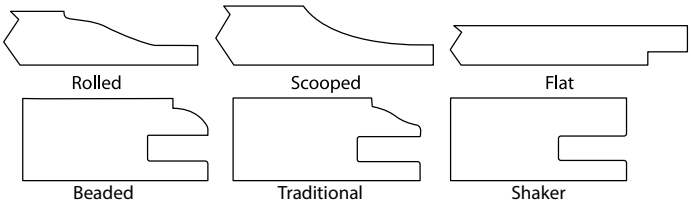

There is an extended lead time for Stanisci wood hoods. See your Cycle Ship for more information. We distribute Cycle Ship approximately every six weeks.

- Stanisci hoods are available in Alder, Rustic Alder, Cherry, Hickory, Maple, Red Oak and Walnut. All other species must be quoted. Verify availability of specie to be quoted.
- To determine proper installation height of hood, consult the hood and appliance manufacturer specifications, as well as your local codes.

Block 2670 Stanisci Wood Hood Q-Series

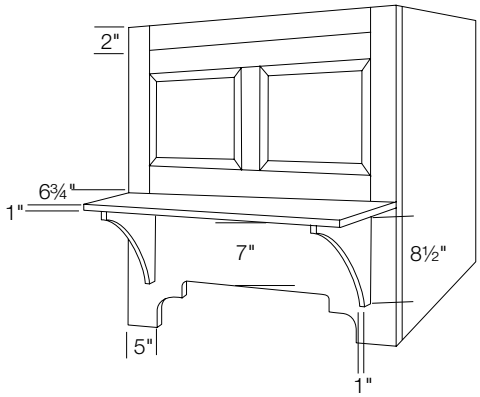

DESIGN CONSIDERATIONS

24", 30", 36", 42", 48" High - 22¼" Deep

- The Q-Series hood is designed to mount between two cabinets
- End panels are finished
- Choose Rolled, Scooped or Flat profile for the panels. Then select Beaded, Traditional or Shaker.
- Accepts onlays
- Simple Bracket corbels and shelf are included on this hood
- For all widths, corbels are located 2½" from the hood edge
- Shelf is 6¾" deep
- Call Technical assistance at 800.551.3404 for modifications.

HOW TO ORDER

- Nomenclature indicates width by height.
- Available with a removable panel. Specify **REMPL** in Special Information Section.
- Order onlays and other decorative accents separately
- Order blowers, fans and liners directly from Stanisci Designs. www.wood-hood.com, 248-572-6880
- Cannot be placed on rush schedule.
- Pricing P-121

Q-Series, 24" High

Rolled	Scooped	Flat
QBKT3024R	QBKT3024S	QBKT3024F
QBKT3624R	QBKT3624S	QBKT3624F
QBKT4224R	QBKT4224S	QBKT4224F
QBKT4824R	QBKT4824S	QBKT4824F
QBKT5424R	QBKT5424S	QBKT5424F
QBKT6024R	QBKT6024S	QBKT6024F

Q-Series, 30" High

Rolled	Scooped	Flat
QBKT3030R	QBKT3030S	QBKT3030F
QBKT3630R	QBKT3630S	QBKT3630F
QBKT4230R	QBKT4230S	QBKT4230F
QBKT4830R	QBKT4830S	QBKT4830F
QBKT5430R	QBKT5430S	QBKT5430F
QBKT6030R	QBKT6030S	QBKT6030F

Q-Series, 36" High

Rolled	Scooped	Flat
QBKT3036R	QBKT3036S	QBKT3036F
QBKT3636R	QBKT3636S	QBKT3636F
QBKT4236R	QBKT4236S	QBKT4236F
QBKT4836R	QBKT4836S	QBKT4836F
QBKT5436R	QBKT5436S	QBKT5436F
QBKT6036R	QBKT6036S	QBKT6036F

Q-Series, 42" High

Rolled	Scooped	Flat
QBKT3042R	QBKT3042S	QBKT3042F
QBKT3642R	QBKT3642S	QBKT3642F
QBKT4242R	QBKT4242S	QBKT4242F
QBKT4842R	QBKT4842S	QBKT4842F
QBKT5442R	QBKT5442S	QBKT5442F
QBKT6042R	QBKT6042S	QBKT6042F

Q-Series, 48" High

Rolled	Scooped	Flat
QBKT3048R	QBKT3048S	QBKT3048F
QBKT3648R	QBKT3648S	QBKT3648F
QBKT4248R	QBKT4248S	QBKT4248F
QBKT4848R	QBKT4848S	QBKT4848F
QBKT5448R	QBKT5448S	QBKT5448F
QBKT6048R	QBKT6048S	QBKT6048F

© Copyright StarMark Cabinetry MARCH 2021

Block 2670 Stanisci Wood Hood S-Series

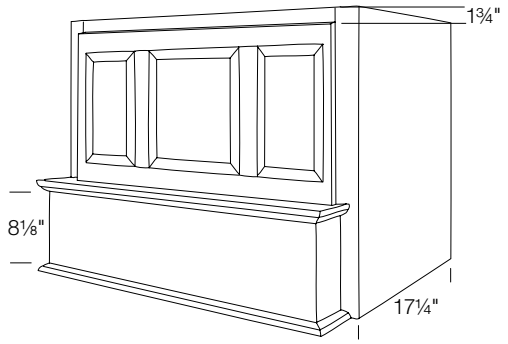

S-Series, 24" High

Rolled	Scooped	Flat
S3324R	S3324S	S3324F
S3924R	S3924S	S3924F
S4524R	S4524S	S4524F
S5124R	S5124S	S5124F
S5724R	S5724S	S5724F
S6324R	S6324S	S6324F

S-Series, 36" High

Rolled	Scooped	Flat
S3336R	S3336S	S3336F
S3936R	S3936S	S3936F
S4536R	S4536S	S4536F
S5136R	S5136S	S5136F
S5736R	S5736S	S5736F
S6336R	S6336S	S6336F

S-Series, 30" High

Rolled	Scooped	Flat
S3330R	S3330S	S3330F
S3930R	S3930S	S3930F
S4530R	S4530S	S4530F
S5130R	S5130S	S5130F
S5730R	S5730S	S5730F
S6330R	S6330S	S6330F

S-Series, 42" High

Rolled	Scooped	Flat
S3342R	S3342S	S3342F
S3942R	S3942S	S3942F
S4542R	S4542S	S4542F
S5142R	S5142S	S5142F
S5742R	S5742S	S5742F
S6342R	S6342S	S6342F

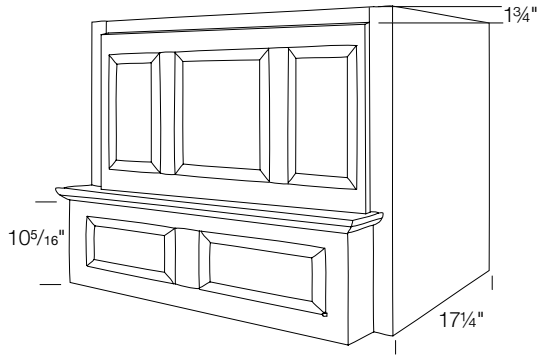

S-Series, 24" High

Rolled	Scooped	Flat
SRS3324R	SRS3324S	SRS3324F
SRS3924R	SRS3924S	SRS3924F
SRS4524R	SRS4524S	SRS4524F
SRS5124R	SRS5124S	SRS5124F
SRS5724R	SRS5724S	SRS5724F
SRS6324R	SRS6324S	SRS6324F

S-Series, 36" High

Rolled	Scooped	Flat
SRS3336R	SRS3336S	SRS3336F
SRS3936R	SRS3936S	SRS3936F
SRS4536R	SRS4536S	SRS4536F
SRS5136R	SRS5136S	SRS5136F
SRS5736R	SRS5736S	SRS5736F
SRS6336R	SRS6336S	SRS6336F

S-Series, 30" High

Rolled	Scooped	Flat
SRS3330R	SRS3330S	SRS3330F
SRS3930R	SRS3930S	SRS3930F
SRS4530R	SRS4530S	SRS4530F
SRS5130R	SRS5130S	SRS5130F
SRS5730R	SRS5730S	SRS5730F
SRS6330R	SRS6330S	SRS6330F

S-Series, 42" High

Rolled	Scooped	Flat
SRS3342R	SRS3342S	SRS3342F
SRS3942R	SRS3942S	SRS3942F
SRS4542R	SRS4542S	SRS4542F
SRS5142R	SRS5142S	SRS5142F
SRS5742R	SRS5742S	SRS5742F
SRS6342R	SRS6342S	SRS6342F

DESIGN CONSIDERATIONS

24", 30", 36", 42" High - 23⅜" Deep

- The S-Series hood is designed to mount between two cabinets
- End panels are finished
- Choose Rolled, Scooped or Flat profile for the panels. Then select Beaded, Traditional or Shaker.
- Accepts onlays
- Optional corbels can be installed below the hood
- Call Technical assistance at 800.551.3404 for modifications.

HOW TO ORDER

- Nomenclature indicates width by height.
- Order corbels, onlays and other decorative accents separately
- Order blowers, fans and liners directly from Stanisci Designs. www.wood-hood.com, 248-572-6880
- Cannot be placed on rush schedule.
- Pricing P-122

INSTALLATION TIP

- The applied panel removes for easier installation.

© Copyright StarMark Cabinetry MARCH 2021

ADIP PROFILES

For block 2670

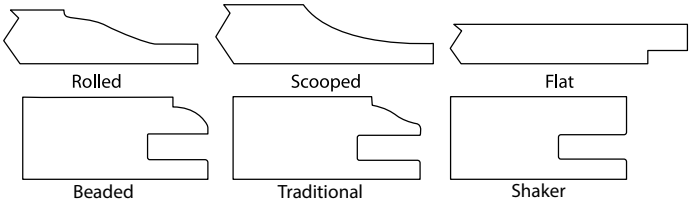

There is an extended lead time for Stanisci wood hoods. See your Cycle Ship for more information. We distribute Cycle Ship approximately every six weeks.

- Stanisci hoods are available in Alder, Rustic Alder, Cherry, Hickory, Maple, Red Oak and Walnut. All other species must be quoted. Verify availability of specie to be quoted.
- To determine proper installation height of hood, consult the hood and appliance manufacturer specifications, as well as your local codes.

Block 2670 Stanisci Wood Hood S-Series

continued

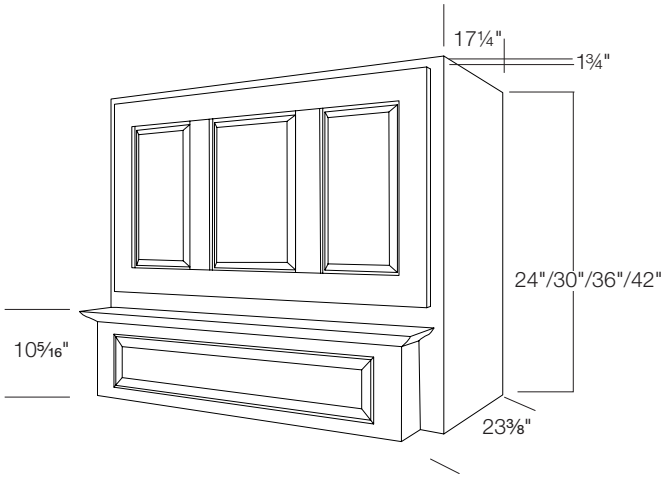

Series S, 24" High

Rolled	Scooped	Flat
SRSS3324R	SRSS3324S	SRSS3324F
SRSS3924R	SRSS3924S	SRSS3924F
SRSS4524R	SRSS4524S	SRSS4524F
SRSS5124R	SRSS5124S	SRSS5124F
SRSS5724R	SRSS5724S	SRSS5724F
SRSS6324R	SRSS6324S	SRSS6324F

Series S, 36" High

Rolled	Scooped	Flat
SRSS3336R	SRSS3336S	SRSS3336F
SRSS3936R	SRSS3936S	SRSS3936F
SRSS4536R	SRSS4536S	SRSS4536F
SRSS5136R	SRSS5136S	SRSS5136F
SRSS5736R	SRSS5736S	SRSS5736F
SRSS6336R	SRSS6336S	SRSS6336F

Series S, 30" High

Rolled	Scooped	Flat
SRSS3330R	SRSS3330S	SRSS3330F
SRSS3930R	SRSS3930S	SRSS3930F
SRSS4530R	SRSS4530S	SRSS4530F
SRSS5130R	SRSS5130S	SRSS5130F
SRSS5730R	SRSS5730S	SRSS5730F
SRSS6330R	SRSS6330S	SRSS6330F

Series S, 42" High

Rolled	Scooped	Flat
SRSS3342R	SRSS3342S	SRSS3342F
SRSS3942R	SRSS3942S	SRSS3942F
SRSS4542R	SRSS4542S	SRSS4542F
SRSS5142R	SRSS5142S	SRSS5142F
SRSS5742R	SRSS5742S	SRSS5742F
SRSS6342R	SRSS6342S	SRSS6342F

DESIGN CONSIDERATIONS

24", 30", 36", 42" High - 23⅜" Deep

- The S-Series hood is designed to mount between two cabinets
- End panels are finished
- Choose Rolled, Scooped or Flat profile for the valance and panels. Then select Beaded, Traditional or Shaker.
- Optional corbels can be installed below the hood
- Call Technical assistance at 800.551.3404 for modifications.

HOW TO ORDER

- Nomenclature indicates width by height.
- Order corbels separately
- Order blowers, fans and liners directly from Stanisci Designs. www.wood-hood.com, 248-572-6880
- Cannot be placed on rush schedule.
- Pricing P-123

INSTALLATION TIP

- The applied panel removes for easier installation.

© Copyright StarMark Cabinetry MARCH 2021

Block 2670 Stanisci Wood Hood S-Series

continued

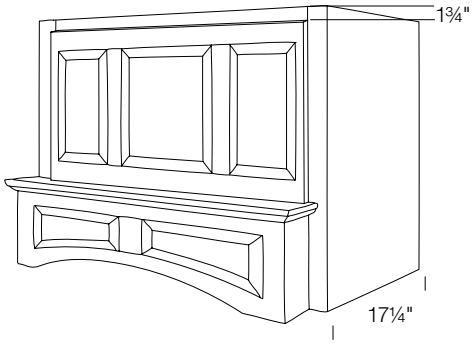

S-Series, 24" High

Rolled	Scooped	Flat
SRA3324R	SRA3324S	SRA3324F
SRA3924R	SRA3924S	SRA3924F
SRA4524R	SRA4524S	SRA4524F
SRA5124R	SRA5124S	SRA5124F
SRA5724R	SRA5724S	SRA5724F
SRA6324R	SRA6324S	SRA6324F

S-Series, 36" High

Rolled	Scooped	Flat
SRA3336R	SRA3336S	SRA3336F
SRA3936R	SRA3936S	SRA3936F
SRA4536R	SRA4536S	SRA4536F
SRA5136R	SRA5136S	SRA5136F
SRA5736R	SRA5736S	SRA5736F
SRA6336R	SRA6336S	SRA6336F

S-Series, 30" High

Rolled	Scooped	Flat
SRA3330R	SRA3330S	SRA3330F
SRA3930R	SRA3930S	SRA3930F
SRA4530R	SRA4530S	SRA4530F
SRA5130R	SRA5130S	SRA5130F
SRA5730R	SRA5730S	SRA5730F
SRA6330R	SRA6330S	SRA6330F

S-Series, 42" High

Rolled	Scooped	Flat
SRA3342R	SRA3342S	SRA3342F
SRA3942R	SRA3942S	SRA3942F
SRA4542R	SRA4542S	SRA4542F
SRA5142R	SRA5142S	SRA5142F
SRA5742R	SRA5742S	SRA5742F
SRA6342R	SRA6342S	SRA6342F

DESIGN CONSIDERATIONS

24", 30", 36", 42" High - 23⅜" Deep

- The S-Series hood is designed to mount between two cabinets
- End panels are finished
- Choose Rolled, Scooped or Flat profile for the valance and panels. Then select Beaded, Traditional or Shaker.
- Optional corbels can be installed below the hood
- Call Technical assistance at 800.551.3404 for modifications.

HOW TO ORDER

- Nomenclature indicates width by height.
- When ordering the baffle style liner, increase the base height of the SRA hood by 1". This is a no charge option.
- Order corbels separately
- Order blowers, fans and liners directly from Stanisci Designs. www.wood-hood.com, 248-572-6880
- Cannot be placed on rush schedule.
- Pricing P-125

INSTALLATION TIP

- The panel removes for easier installation.

Block 2670 Stanisci Wood Hood U-Series

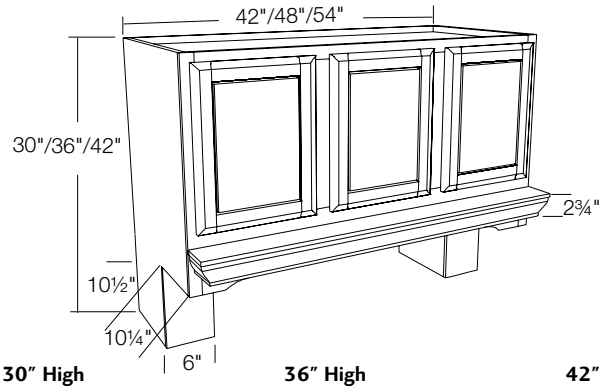

30" High	36" High	42" High
UHU4230	UHU4236	UHU4242
UHU4830	UHU4836	UHU4842
UHU5430	UHU5436	UHU5442

DESIGN CONSIDERATIONS

30", 36", 42" High - 22¼" Deep

- The U-Series hood is designed to mount between two cabinets
- Doors are fixed
- 42" wide has two door panels
- 48" & 54" wide have three door panels (shown in illustration)
- End panels are finished
- Shelf depth is 3 9/16"
- Call Technical assistance at 800.551.3404 for modifications.
- Accepts corbels and onlays
- Eyebrow valance
- The baffle style liner is not available with the UHU series hood.

HOW TO ORDER

- Nomenclature indicates width by height.
- Order corbels, onlays and other decorative accents separately
- Order blowers, fans and liners directly from Stanisci Designs. www.wood-hood.com, 248-572-6880
- Cannot be placed on rush schedule.
- Pricing P-125

© Copyright StarMark Cabinetry MARCH 2021

ADIP PROFILES

For block 2670

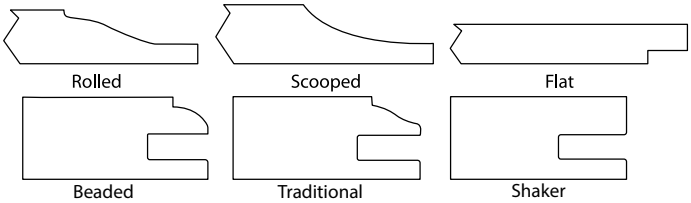

There is an extended lead time for Stanisci wood hoods. See your Cycle Ship for more information. We distribute Cycle Ship approximately every six weeks.

- Stanisci hoods are available in Alder, Rustic Alder, Cherry, Hickory, Maple, Red Oak and Walnut. All other species must be quoted. Verify availability of specie to be quoted.
- To determine proper installation height of hood, consult the hood and appliance manufacturer specifications, as well as your local codes.

Block 2670 Stanisci Wood Hood W-Series

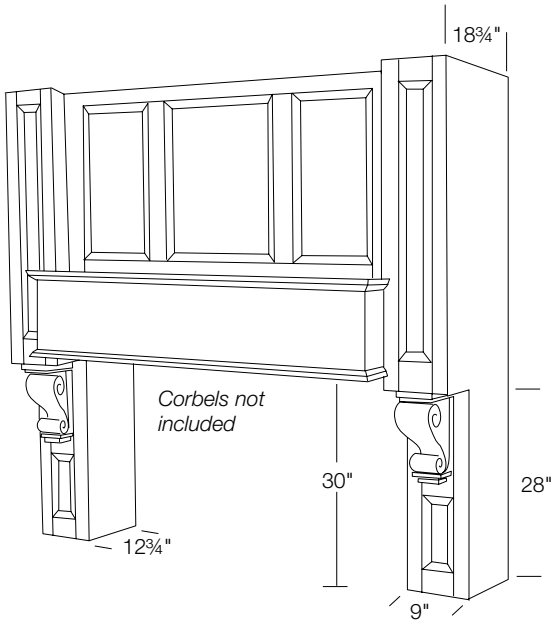

DESIGN CONSIDERATIONS

60", 72", 84" High - 22¼" Deep

- The W-Series hood is designed to mount between two cabinets
- End panels are finished
- Choose Rolled, Scooped or Flat profile for the towers and panels. Then select Beaded, Traditional or Shaker.
- Accepts corbels and onlays
- Tower portions are 9" wide and 12¾" deep
- The recess in the display niche allows for 3" puck lights
- Pullout shelves in lower tower units are Maple with chrome accents. They extend fully.
- Pullout unit includes two adjustable shelves and one fixed shelf
- Mantel shelf is 8⅛" deep
- Call Technical assistance at 800.551.3404 for modifications.

HOW TO ORDER

- Nomenclature indicates width by height.
- Order corbels, onlays and other decorative accents separately
- Order blowers, fans and liners directly from Stanisci Designs. www.wood-hood.com, 248-572-6880
- Cannot be placed on rush schedule.
- Pricing P-126

INSTALLATION TIP

- The wainscot panel removes for easier installation.
- Towers come down to countertop. Ensure that there is enough clearance between the towers and the cooking surface to pass local code.

W-Series, 60" High

Rolled	Scooped	Flat
SW6660RWSR	SW6660SWSR	SW6660FWSR
SW7260RWSR	SW7260SWSR	SW7260FWSR
SW8460RWSR	SW8460SWSR	SW8460FWSR
SW9060RWSR	SW9060SWSR	SW9060FWSR

W-Series, 72" High

Rolled	Scooped	Flat
SW6672RWSR	SW6672SWSR	SW6672FWSR
SW7272RWSR	SW7272SWSR	SW7272FWSR
SW8472RWSR	SW8472SWSR	SW8472FWSR
SW9072RWSR	SW9072SWSR	SW9072FWSR

W-Series, 84" High

Rolled	Scooped	Flat
SW6684RWSR	SW6684SWSR	SW6684FWSR
SW7284RWSR	SW7284SWSR	SW7284FWSR
SW8484RWSR	SW8484SWSR	SW8484FWSR
SW9084RWSR	SW9084SWSR	SW9084FWSR

© Copyright StarMark Cabinetry MARCH 2021

Block 2670 Stanisci Wood Hood W-Series

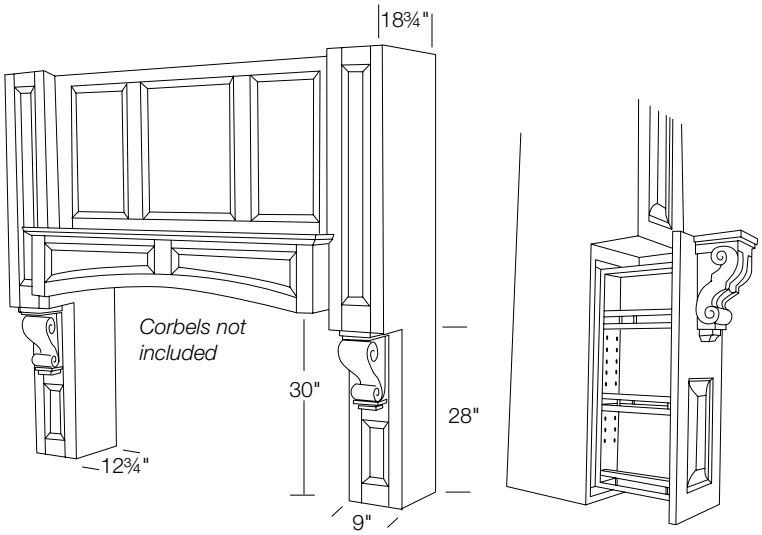

DESIGN CONSIDERATIONS

60", 72", 84" High - 22¼" Deep

- The W-Series hood is designed to mount between two cabinets
- End panels are finished
- Choose Rolled, Scooped or Flat profile for the valance, panels and towers. Then select Beaded, Traditional or Shaker.
- Accepts corbels and onlays
- Tower portions are 9" wide and 12¾" deep
- Pullout shelves in lower tower units are Maple with chrome accents. They extend fully. See illustration at left.
- Pullout unit includes two adjustable shelves and one fixed shelf
- Mantel shelf is 8⅛" deep
- Call Technical assistance at 800.551.3404 for modifications.

HOW TO ORDER

- Nomenclature indicates width by height.
- When ordering the baffle style liner, increase the base height of the SWA hood by 1". This is a no charge option.
- Order corbels, onlays and other decorative accents separately
- Order blowers, fans and liners directly from Stanisci Designs. www.wood-hood.com, 248-572-6880
- Cannot be placed on rush schedule.
- Pricing P-126

INSTALLATION TIP

- The wainscot panel removes for easier installation.
- Towers come down to countertop. Ensure that there is enough clearance between the towers and the cooking surface to pass local code.

W-Series, 60" High

Rolled	Scooped	Flat
SWA6660RWS	SWA6660SWS	SWA6660FWS
SWA7260RWS	SWA7260SWS	SWA7260FWS
SWA8460RWS	SWA8460SWS	SWA8460FWS
SWA9060RWS	SWA9060SWS	SWA9060FWS

W-Series, 72" High

Rolled	Scooped	Flat
SWA6672RWS	SWA6672SWS	SWA6672FWS
SWA7272RWS	SWA7272SWS	SWA7272FWS
SWA8472RWS	SWA8472SWS	SWA8472FWS
SWA9072RWS	SWA9072SWS	SWA9072FWS

W-Series, 84" High

Rolled	Scooped	Flat
SWA6684RWS	SWA6684SWS	SWA6684FWS
SWA7284RWS	SWA7284SWS	SWA7284FWS
SWA8484RWS	SWA8484SWS	SWA8484FWS
SWA9084RWS	SWA9084SWS	SWA9084FWS

© Copyright StarMark Cabinetry MARCH 2021

ADIP PROFILES

For block 2670

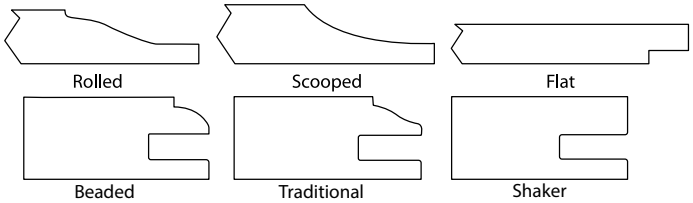

There is an extended lead time for Stanisci wood hoods. See your Cycle Ship for more information. We distribute Cycle Ship approximately every six weeks.

- Stanisci hoods are available in Alder, Rustic Alder, Cherry, Hickory, Maple, Red Oak and Walnut. All other species must be quoted. Verify availability of specie to be quoted.
- To determine proper installation height of hood, consult the hood and appliance manufacturer specifications, as well as your local codes.

Block 2670 Stanisci Wood Hood X-Series

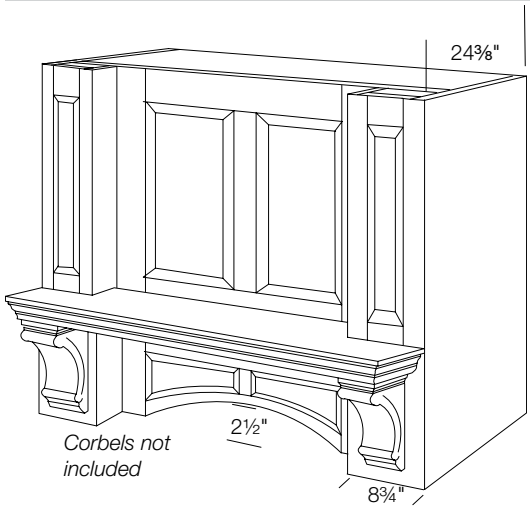

DESIGN CONSIDERATIONS

24", 30", 36", 42" High - 24⅜" Deep

- The X-Series hood is designed to mount between two cabinets
- End panels are finished
- Choose Rolled, Scooped or Flat profile for the valance, towers and panels. Then select Beaded, Traditional or Shaker.
- Accepts corbels
- Tower portions are 8¾" wide and 24⅜" deep
- Mantel shelf is 9⅛" deep
- Call Technical assistance at 800.551.3404 for modifications.

HOW TO ORDER

- Nomenclature indicates width by height.
- Order corbels separately
- Order blowers, fans and liners directly from Stanisci Designs. www.wood-hood.com, 248-572-6880
- Cannot be placed on rush schedule.
- Pricing P-127

X-Series, 24" High

Rolled	Scooped	Flat
SXRA3624R	SXRA3624S	SXRA3624F
SXRA4224R	SXRA4224S	SXRA4224F
SXRA4824R	SXRA4824S	SXRA4824F
SXRA5424R	SXRA5424S	SXRA5424F
SXRA6024R	SXRA6024S	SXRA6024F

X-Series, 30" High

Rolled	Scooped	Flat
SXRA3630R	SXRA3630S	SXRA3630F
SXRA4230R	SXRA4230S	SXRA4230F
SXRA4830R	SXRA4830S	SXRA4830F
SXRA5430R	SXRA5430S	SXRA5430F
SXRA6030R	SXRA6030S	SXRA6030F

X-Series, 36" High

Rolled	Scooped	Flat
SXRA3636R	SXRA3636S	SXRA3636F
SXRA4236R	SXRA4236S	SXRA4236F
SXRA4836R	SXRA4836S	SXRA4836F
SXRA5436R	SXRA5436S	SXRA5436F
SXRA6036R	SXRA6036S	SXRA6036F

X-Series, 42" High

Rolled	Scooped	Flat
SXRA3642R	SXRA3642S	SXRA3642F
SXRA4242R	SXRA4242S	SXRA4242F
SXRA4842R	SXRA4842S	SXRA4842F
SXRA5442R	SXRA5442S	SXRA5442F
SXRA6042R	SXRA6042S	SXRA6042F

© Copyright StarMark Cabinetry MARCH 2021

THIS PAGE INTENTIONALLY LEFT BLANK

© Copyright StarMark Cabinetry MARCH 2021

Block 2672 Artisan Hood

NEW! I

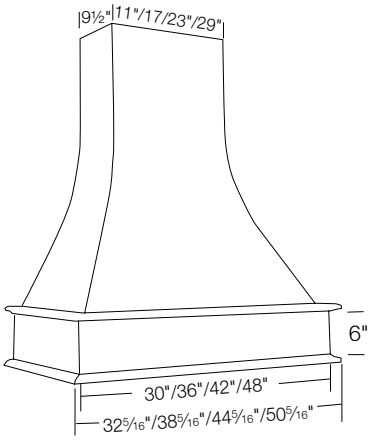

ARTH3046
ARTH3646
ARTH4246
ARTH4846

DESIGN CONSIDERATIONS

46″ High - 20 1/16″ Deep

- Available in Alder, Cherry, Hickory, Maple and Oak
- Includes a silver metallic powder coated liner
- Mounting and installation hardware included

HOW TO ORDER

- See Block 2681 for blower options.
- Cannot be placed on rush schedule.
- Pricing P-128

INSTALLATION TIP

- Chimney can be trimmed on job site. Top 18″ is trimmable.

Block 2673 Modern Farmhouse Tapered Hood with Chimney

NEW! I

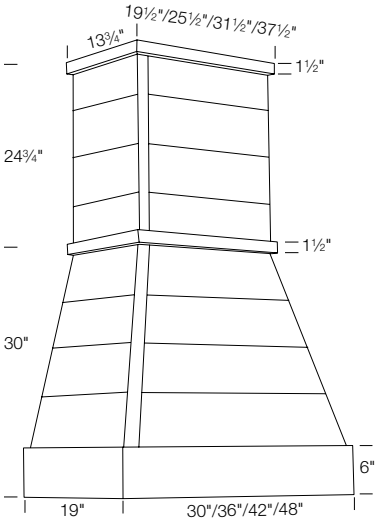

MFT3054
MFT3654
MFT4254
MFT4854

DESIGN CONSIDERATIONS

53¾″ High - 19″ Deep

- Available in Alder, Cherry, Hickory, Maple and Oak
- Includes a silver metallic powder coated liner
- Mounting and installation hardware included

HOW TO ORDER

- See Block 2681 for blower options.
- Cannot be placed on rush schedule.
- Pricing P-128

INSTALLATION TIP

- Chimney can be trimmed on job site

© Copyright StarMark Cabinetry MARCH 2021

Block 2674 Modern Farmhouse Tapered Hood with Chimney and Brackets

NEW! I

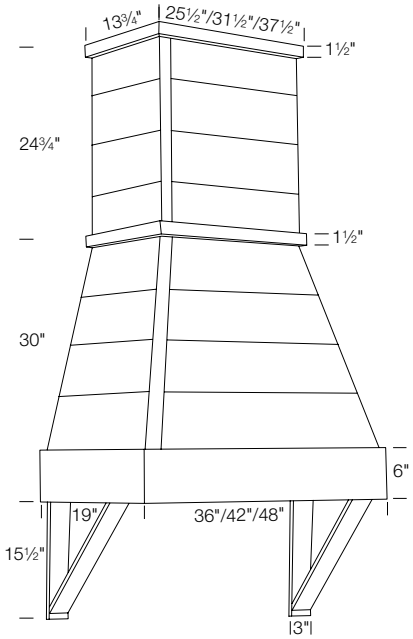

MFT3654BKT
MFT4254BKT
MFT4854BKT

DESIGN CONSIDERATIONS

70¼" High - 19" Deep

- Available in Alder, Cherry, Hickory, Maple and Oak
- Includes a silver metallic powder coated liner
- Mounting and installation hardware included

HOW TO ORDER

- See Block 2681 for blower options.
- Cannot be placed on rush schedule.
- Pricing P-128

INSTALLATION TIP

- Chimney can be trimmed on job site

Block 2675 Modern Farmhouse Straight Hood

NEW! I

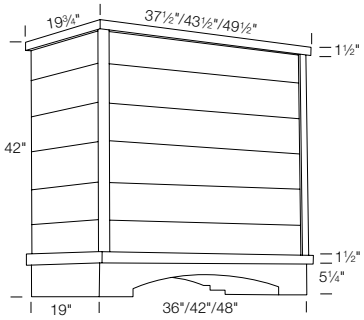

MFS3654
MFS4254
MFS4854

DESIGN CONSIDERATIONS

42" High - 19¾" Deep

- Available in Alder, Cherry, Hickory, Maple and Oak
- Includes a silver metallic powder coated liner
- Mounting and installation hardware included

HOW TO ORDER

- See Block 2681 for blower options.
- Cannot be placed on rush schedule.
- Pricing P-128

Block 2676 Modern Farmhouse Straight Hood with Brackets

NEW! I

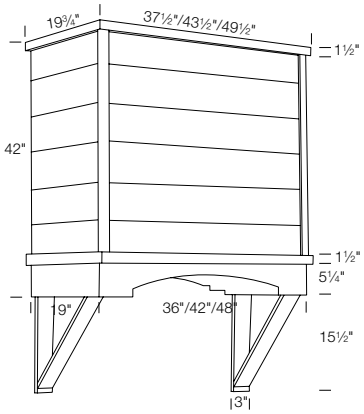

MFS3654BKT
MFS4254BKT
MFS4854BKT

DESIGN CONSIDERATIONS

57½" High - 19¾" Deep

- Available in Alder, Cherry, Hickory, Maple and Oak
- Includes a silver metallic powder coated liner
- Mounting and installation hardware included

HOW TO ORDER

- See Block 2681 for blower options.
- Cannot be placed on rush schedule.
- Pricing P-128

© Copyright StarMark Cabinetry MARCH 2021

Block 2677 Euro Hood

NEW! I

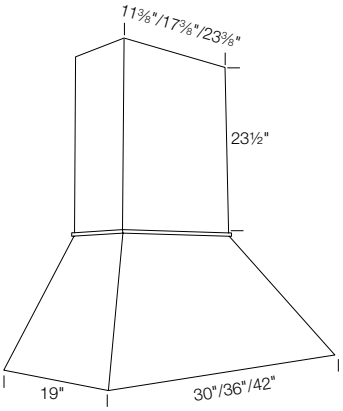

EUROH3040
EUROH3640
EUROH4240

DESIGN CONSIDERATIONS

40" High - 19" Deep

- Available in Alder, Cherry, Hickory, Maple and Oak
- Includes a silver metallic powder coated liner
- Mounting and installation hardware included

HOW TO ORDER

- See Block 2681 for blower options.
- Cannot be placed on rush schedule.
- Pricing P-129

Block 2678 Contempora Hood

NEW! I

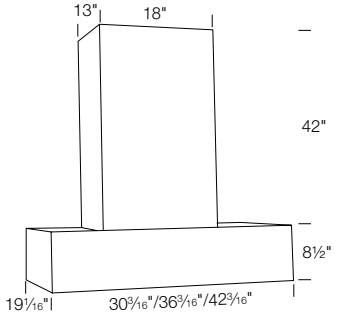

CTEMPO3050
CTEMPO3650
CTEMPO4250

DESIGN CONSIDERATIONS

50½" High - 19" Deep

- Available in Alder, Cherry, Hickory, Maple and Oak
- Includes a silver metallic powder coated liner
- Mounting and installation hardware included

HOW TO ORDER

- See Block 2681 for blower options.
- Cannot be placed on rush schedule.
- Pricing P-129

© Copyright StarMark Cabinetry MARCH 2021

Block 2680 Hood Accessories

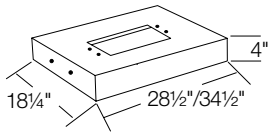

RALINER30
RALINER36

DESIGN CONSIDERATIONS

Hood Liner
- Liner to be used with wood hood
- Fits hoods in blocks 2530 and 2535
- Silver metallic finish

HOW TO ORDER

- Pricing P-130

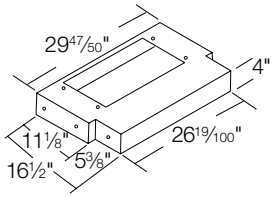

TRALINER30

Opening is 19 7/16" x 10 3/16"

Tapered Hood Liner
- Liner to be used with tapered wood hood (block 2500)
- Silver metallic finish
- Pricing P-130

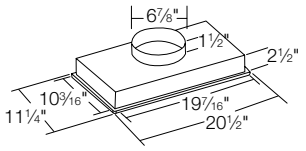

RABLOWER

Blower for Wood Hood
- Two-speed motor, 250 CFM/8 sones
- Fits hoods in blocks 2500-2540
- Silver metallic finish
- Dual 40 watt lighting (not included; recommended bulbs: two 40 watt small base candelabra bulbs)
- Pricing P-130

2303

Damper
- Fits hoods in blocks 2500-2540
- Pricing P-130

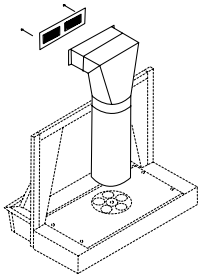

DCK1

Ductless Conversion Kit
- This item is to be used only with RABLOWER
- If unit is not venting outside, order DCK-1 with other hood accessories
- Trim plate included for venting exhaust back into kitchen
- Charcoal filter included
- 6" of adjustment
- Fits hoods in blocks 2500-2540
- Pricing P-130

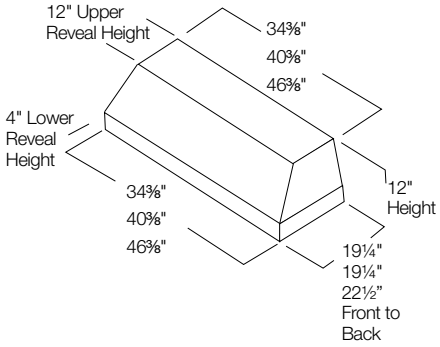

CHOODLIN36
CHOODLIN42
CHOODLIN48

Chimney Hood Liner/Blower
- Liner and blower all in one
- 3 speed control
- Halogen lights
- 600 CFM for 36" and 42"
- 1200 CFM for 48"
- Nomenclature denotes hood width
- Metal liner to be used with items in blocks 2600 and 2650
- Unit must be vented outside
- Pricing P-130

The hood accessories on this page are not compatible with the Stanisci Hoods in Block 2670.

© Copyright StarMark Cabinetry MARCH 2021

Block 2681 Hood Blowers

NEW! I

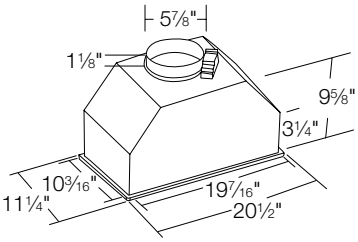

OMNT390BLW
OMNT500BLW

DESIGN CONSIDERATIONS

OMNT390BLW

- 390 CFM/6 sones
- Silver metallic finish on the face
- 3 speed slide control
- Dual 40 watt lighting, bulbs not included
- Recommended two 40 watt small base candelabra bulbs
- Back draft damper included

OMNT500BLW

- 500 CFM/8.2 sones
- Stainless steel face
- Push button controls with three speeds
- Two 20 watt halogen lamps included
- Back draft damper included

HOW TO ORDER

- Pricing P-130

Block 2705 Bookcase

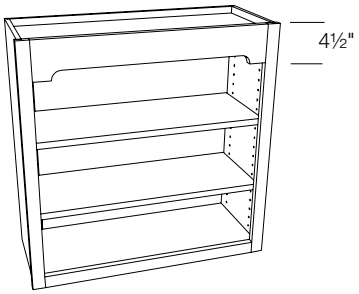

DESIGN CONSIDERATIONS

30", 33", 36", 39", 42", 45", 48" High - 12" Deep

- Adjustable ¾" thick plywood shelves. See chart.
- Arch valance is standard
- Drilled end panels
- For optional shelf trim see block 10070
- Ogee edge on frame opening
- Finished veneer interior
- If the bookcase is over 42" wide, a center partition is required. See block 9380.

CCWF1830	**CCWF1836**	**CCWF1842**	**CCWF1848**
CCWF2130	**CCWF2136**	**CCWF2142**	**CCWF2148**
CCWF2430	**CCWF2436**	**CCWF2442**	**CCWF2448**
CCWF2730	**CCWF2736**	**CCWF2742**	**CCWF2748**
CCWF3030	**CCWF3036**	**CCWF3042**	**CCWF3048**
CCWF3330	**CCWF3336**	**CCWF3342**	**CCWF3348**
CCWF3630	**CCWF3636**	**CCWF3642**	**CCWF3648**
CCWF3930	**CCWF3936**	**CCWF3942**	**CCWF3948**
CCWF4230	**CCWF4236**	**CCWF4242**	**CCWF4248**
CCWF1833	**CCWF1839**	**CCWF1845**	**CCWFSQFT**
CCWF2133	**CCWF2139**	**CCWF2145**	
CCWF2433	**CCWF2439**	**CCWF2445**	
CCWF2733	**CCWF2739**	**CCWF2745**	
CCWF3033	**CCWF3039**	**CCWF3045**	
CCWF3333	**CCWF3339**	**CCWF3345**	
CCWF3633	**CCWF3639**	**CCWF3645**	
CCWF3933	**CCWF3939**	**CCWF3945**	
CCWF4233	**CCWF4239**	**CCWF4245**	

HOW TO ORDER

- Other valances are available with an additional charge. 4½" Straight Valance is available at no charge. See block 9170 for Valance Top Rail options.
- Ogee edge on frame may be modified when certain valances are specified for top rail. See HelpZone for information.
- Additional sizes are available; use square foot pricing
- Pricing P-131

Cabinet Height	Number of Shelves
30", 33", 36"	2
39", 42", 45", 48"	3

© Copyright StarMark Cabinetry MARCH 2021

Block 2706 Bookcase with Beaded Back

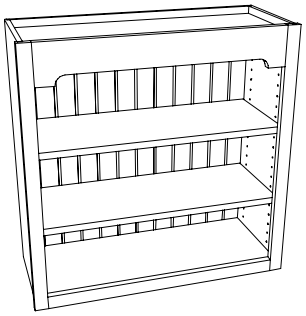

DESIGN CONSIDERATIONS

30", 33", 36", 39", 42", 45", 48" High - 12" Deep

- Adjustable ¾" thick plywood shelves. See chart.
- Arch valance is standard
- Drilled end panels
- For optional shelf trim see block 10070
- Ogee edge on frame opening
- Finished veneer interior
- If the bookcase is over 42" wide, a center partition is required. See block 9380.
- Beaded back

CCWF1830BB	**CCWF1836BB**	**CCWF1842BB**	**CCWF1848BB**
CCWF2130BB	**CCWF2136BB**	**CCWF2142BB**	**CCWF2148BB**
CCWF2430BB	**CCWF2436BB**	**CCWF2442BB**	**CCWF2448BB**
CCWF2730BB	**CCWF2736BB**	**CCWF2742BB**	**CCWF2748BB**
CCWF3030BB	**CCWF3036BB**	**CCWF3042BB**	**CCWF3048BB**
CCWF3330BB	**CCWF3336BB**	**CCWF3342BB**	**CCWF3348BB**
CCWF3630BB	**CCWF3636BB**	**CCWF3642BB**	**CCWF3648BB**
CCWF3930BB	**CCWF3936BB**	**CCWF3942BB**	**CCWF3948BB**
CCWF4230BB	**CCWF4236BB**	**CCWF4242BB**	**CCWF4248BB**

CCWF1833BB	**CCWF1839BB**	**CCWF1845BB**	**CCWFBBSQFT**
CCWF2133BB	**CCWF2139BB**	**CCWF2145BB**	
CCWF2433BB	**CCWF2439BB**	**CCWF2445BB**	
CCWF2733BB	**CCWF2739BB**	**CCWF2745BB**	
CCWF3033BB	**CCWF3039BB**	**CCWF3045BB**	
CCWF3333BB	**CCWF3339BB**	**CCWF3345BB**	
CCWF3633BB	**CCWF3639BB**	**CCWF3645BB**	
CCWF3933BB	**CCWF3939BB**	**CCWF3945BB**	
CCWF4233BB	**CCWF4239BB**	**CCWF4245BB**	

HOW TO ORDER

- Other valances are available with an additional charge. 4½" Straight Valance is available at no charge. See block 9170 for Valance Top Rail options.
- Ogee edge on frame may be modified when certain valances are specified for top rail. See HelpZone for information.
- Additional sizes are available; use square foot pricing
- Pricing P-131

Cabinet Height	Number of Shelves
30", 33", 36"	2
39", 42", 45", 48"	3

© Copyright StarMark Cabinetry MARCH 2021

Block 2710 Bookcase

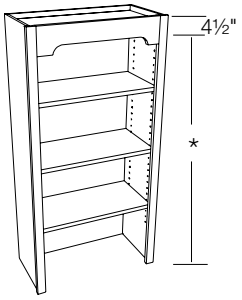

CCW1848	**CCW1854**	**CCW1860**	**CCW1866**
CCW2148	**CCW2154**	**CCW2160**	**CCW2166**
CCW2448	**CCW2454**	**CCW2460**	**CCW2466**
CCW2748	**CCW2754**	**CCW2760**	**CCW2766**
CCW3048	**CCW3054**	**CCW3060**	**CCW3066**
CCW3348	**CCW3354**	**CCW3360**	**CCW3366**
CCW3648	**CCW3654**	**CCW3660**	**CCW3666**
CCW3948	**CCW3954**	**CCW3960**	**CCW3966**
CCW4248	**CCW4254**	**CCW4260**	**CCW4266**
CCW1851	**CCW1857**	**CCW1863**	**CCWSQFT**
CCW2151	**CCW2157**	**CCW2163**	
CCW2451	**CCW2457**	**CCW2463**	
CCW2751	**CCW2757**	**CCW2763**	
CCW3051	**CCW3057**	**CCW3063**	
CCW3351	**CCW3357**	**CCW3363**	
CCW3651	**CCW3657**	**CCW3663**	
CCW3951	**CCW3957**	**CCW3963**	
CCW4251	**CCW4257**	**CCW4263**	

DESIGN CONSIDERATIONS

48", 51", 54", 57", 60", 63", 66" High - 12" Deep

- Adjustable ¾" thick plywood shelves. See chart.
- Arch valance is standard
- Drilled end panels
- For optional shelf trim see block 10070
- This item is available up to 48" wide. If the bookcase is over 42" wide, a center partition is required. See block 9380.
- Ogee edge on frame opening
- Finished veneer interior

HOW TO ORDER

- Other valances are available with an additional charge. 4½" Straight Valance is available at no charge. See block 9170 for Valance Top Rail options. Valance must be a minimum of 4½" high.
- Ogee edge on frame may be modified when certain valances are specified for top rail. See HelpZone for information.
- Additional sizes are available; use square foot pricing

INSTALLATION TIP

We recommend anchoring bottom of frame to maintain squareness of cabinet.

- Pricing P-132

Cabinet Height	Number of Shelves
48"	3
51", 54", 57"	4
60", 63", 66"	5

Block 2711 Bookcase with Beaded Back

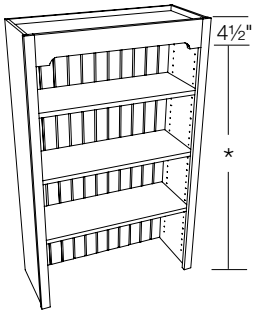

CCW1848BB	**CCW1854BB**	**CCW1860BB**	**CCW1866BB**
CCW2148BB	**CCW2154BB**	**CCW2160BB**	**CCW2166BB**
CCW2448BB	**CCW2454BB**	**CCW2460BB**	**CCW2466BB**
CCW2748BB	**CCW2754BB**	**CCW2760BB**	**CCW2766BB**
CCW3048BB	**CCW3054BB**	**CCW3060BB**	**CCW3066BB**
CCW3348BB	**CCW3354BB**	**CCW3360BB**	**CCW3366BB**
CCW3648BB	**CCW3654BB**	**CCW3660BB**	**CCW3666BB**
CCW3948BB	**CCW3954BB**	**CCW3960BB**	**CCW3966BB**
CCW4248BB	**CCW4254BB**	**CCW4260BB**	**CCW4266BB**
CCW1851BB	**CCW1857BB**	**CCW1863BB**	**CCWBBSQFT**
CCW2151BB	**CCW2157BB**	**CCW2163BB**	
CCW2451BB	**CCW2457BB**	**CCW2463BB**	
CCW2751BB	**CCW2757BB**	**CCW2763BB**	
CCW3051BB	**CCW3057BB**	**CCW3063BB**	
CCW3351BB	**CCW3357BB**	**CCW3363BB**	
CCW3651BB	**CCW3657BB**	**CCW3663BB**	
CCW3951BB	**CCW3957BB**	**CCW3963BB**	
CCW4251BB	**CCW4257BB**	**CCW4263BB**	

DESIGN CONSIDERATIONS

48", 51", 54", 57", 60", 63", 66" High - 12" Deep

- Adjustable ¾" thick plywood shelves. See chart.
- Arch valance is standard
- Drilled end panels
- For optional shelf trim see block 10070
- This item is available up to 48" wide. If the bookcase is over 42" wide, a center partition is required. See block 9380.
- Ogee edge on frame opening
- Finished veneer interior
- Beaded back

HOW TO ORDER

- Other valances are available with an additional charge. 4½" Straight Valance is available at no charge. See block 9170 for Valance Top Rail options. Valance must be a minimum of 4½" high.
- Ogee edge on frame may be modified when certain valances are specified for top rail. See HelpZone for information.
- Additional sizes are available; use square foot pricing

INSTALLATION TIP

We recommend anchoring bottom of frame to maintain squareness of cabinet.

- Pricing P-132

Cabinet Height	Number of Shelves
48"	3
51", 54", 57"	4
60", 63", 66"	5

© Copyright StarMark Cabinetry MARCH 2021

Block 2800 Curved Out What Not Shelf

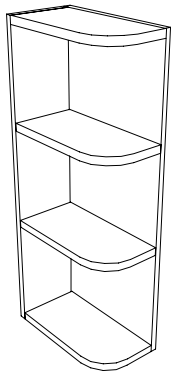

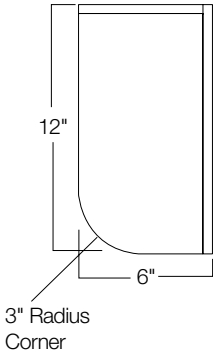

CWNS27

CWNS30

CWNS33

CWNS36

CWNS39

CWNS42

DESIGN CONSIDERATIONS

27", 30", 33", 36", 39", 42" High - 12" Deep

- Solid wood shelves
- 3" shelf radius
- Top shelf is curved to use with curved mouldings. See blocks 12440.
- Finished ends not available
- Finished veneer interior

HOW TO ORDER

- Pricing P-133

Cabinet Height	Number of Shelves
27", 30", 33", 36"	3
39", 42"	4

INSTALLATION TIP

- Requires 6" wall space

Block 2810 Square What Not Shelf

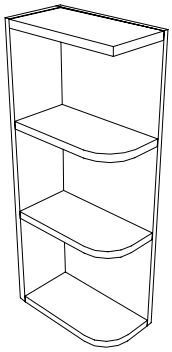

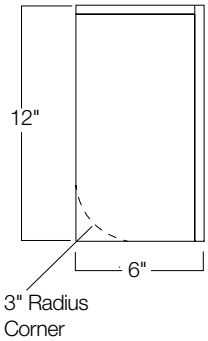

SWNS24L
SWNS24R

SWNS27L
SWNS27R

SWNS30L
SWNS30R

SWNS33L
SWNS33R
SWNS36L

SWNS36R

SWNS39L
SWNS39R

SWNS42L
SWNS42R

DESIGN CONSIDERATIONS

24", 27", 30", 33", 36", 39", 42" High - 12" Deep

- Solid wood shelves
- 3" shelf radius
- Square top shelf to accept mouldings
- Finished ends not available
- Finished veneer interior

HOW TO ORDER

- Specify **Left** or **Right**.
- Illustration shows Left.
- Specify square bottom if using light shield moulding.
- Pricing P-133

Cabinet Height	Number of Shelves
24"	2
27", 30", 33", 36"	3
39", 42"	4

INSTALLATION TIP

- Requires 6" wall space

© Copyright StarMark Cabinetry MARCH 2021

Block 2820 Angle End What Not Shelf

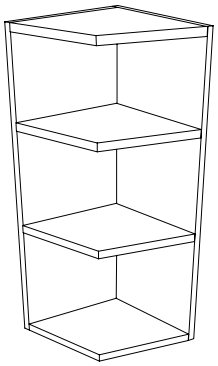

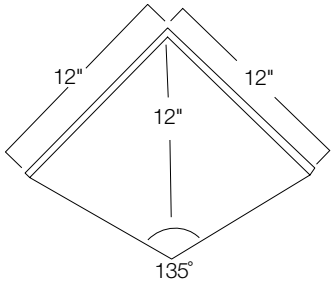

AEWNS1227
AEWNS1230
AEWNS1233
AEWNS1236
AEWNS1239
AEWNS1242

DESIGN CONSIDERATIONS

27", 30", 33", 36", 39", 42" High - 12" Deep

- Solid wood shelves
- Finished ends not available
- Finished veneer interior

HOW TO ORDER

- Pricing P-134

Cabinet Height	Number of Shelves
27", 30", 33", 36"	3
39", 42"	4

INSTALLATION TIP

- Requires 12" wall space

Block 2830 Angle What Not Shelf

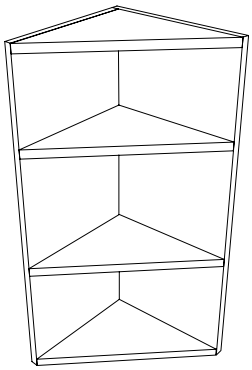

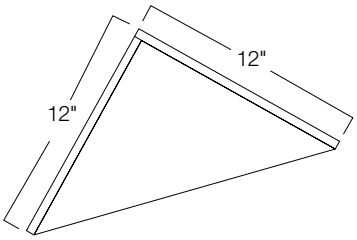

AWNS1224
AWNS1227
AWNS1230
AWNS1233
AWNS1236
AWNS1239
AWNS1242

DESIGN CONSIDERATIONS

24", 27", 30", 33", 36", 39", 42" High - 12" Deep

- Solid wood shelves
- Finished ends not available
- Finished veneer interior

HOW TO ORDER

- Pricing P-134

Cabinet Height	Number of Shelves
24"	2
27", 30", 33", 36"	3
39", 42"	4

INSTALLATION TIP

- Requires 12" wall space

© Copyright StarMark Cabinetry MARCH 2021

Block 2888 Apothecary Drawers Vertical with Dovetails

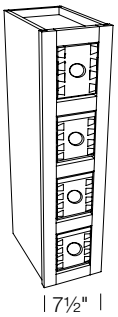

ADVX30
ADVX36
ADVX42

DESIGN CONSIDERATIONS

30", 36", 42" High - 12" Deep

- 30" - 4 drawers
- 36" - 5 drawers
- 42" - 6 drawers
- Apothecary drawers are same species as cabinetry, finished in natural

HOW TO ORDER

- Specify finished ends
- Pricing P-135

Block 2890 Apothecary Drawers

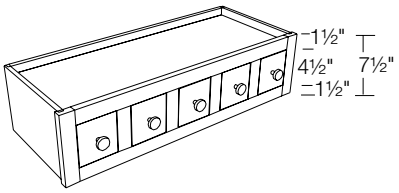

AD30
AD36
AD42

DESIGN CONSIDERATIONS

7½" High - 12" Deep

- Hardware shown in illustration is not included on drawers
- 30" - 4 drawers
- 36" - 5 drawers
- 42" - 6 drawers
- This cabinet is meant to be installed under a wall cabinet. The top should not be exposed.

HOW TO ORDER

- Specify finished ends
- Pricing P-135

© Copyright StarMark Cabinetry MARCH 2021

Block 2892 Wall Drawer

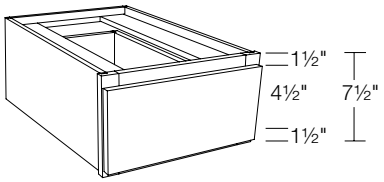

12" deep	18" deep	24" deep
WDRW71212	**WDRW71218**	**WDRW71224**
WDRW71512	**WDRW71518**	**WDRW71524**
WDRW71812	**WDRW71818**	**WDRW71824**
WDRW72112	**WDRW72118**	**WDRW72124**
WDRW72412	**WDRW72418**	**WDRW72424**
WDRW72712	**WDRW72718**	**WDRW72724**
WDRW73012	**WDRW73018**	**WDRW73024**
WDRW73312	**WDRW73318**	**WDRW73324**
WDRW73612	**WDRW73618**	**WDRW73624**

15" deep	21" deep
WDRW71215	**WDRW71221**
WDRW71515	**WDRW71521**
WDRW71815	**WDRW71821**
WDRW72115	**WDRW72121**
WDRW72415	**WDRW72421**
WDRW72715	**WDRW72721**
WDRW73015	**WDRW73021**
WDRW73315	**WDRW73321**
WDRW73615	**WDRW73621**

DESIGN CONSIDERATIONS

7½" High - 12", 15", 18", 21", 24" Deep

- This cabinet is meant to be installed under a wall cabinet. The top should not be exposed.

HOW TO ORDER

- Specify finished ends
- Pricing P-136

NOTES/CAUTION

- Five piece drawer headers not available in inset.

Block 2894 Wall Drawer

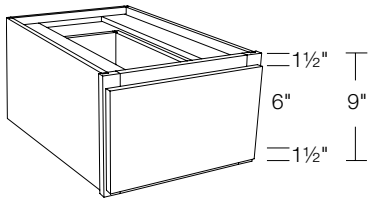

12" deep	18" deep	24" deep
WDRW91212	**WDRW91218**	**WDRW91224**
WDRW91512	**WDRW91518**	**WDRW91524**
WDRW91812	**WDRW91818**	**WDRW91824**
WDRW92112	**WDRW92118**	**WDRW92124**
WDRW92412	**WDRW92418**	**WDRW92424**
WDRW92712	**WDRW92718**	**WDRW92724**
WDRW93012	**WDRW93018**	**WDRW93024**
WDRW93312	**WDRW93318**	**WDRW93324**
WDRW93612	**WDRW93618**	**WDRW93624**

15" deep	21" deep
WDRW91215	**WDRW91221**
WDRW91515	**WDRW91521**
WDRW91815	**WDRW91821**
WDRW92115	**WDRW92121**
WDRW92415	**WDRW92421**
WDRW92715	**WDRW92721**
WDRW93015	**WDRW93021**
WDRW93315	**WDRW93321**
WDRW93615	**WDRW93621**

DESIGN CONSIDERATIONS

9" High - 12", 15", 18", 21", 24" Deep

- This cabinet is meant to be installed under a wall cabinet. The top should not be exposed.

HOW TO ORDER

- Specify finished ends
- Pricing P-137

© Copyright StarMark Cabinetry MARCH 2021

Index

Description	Nomenclature	Page
Accessible Base	HCB	C-176
Accessible Base with Drawer	HCBD	C-176
Accessible Deep Drawer Base	HCDDB	C-177
Accessible Drawer Base	HC3DB	C-177
Accessible Sink/Range Base	HCSRB	C-176
Accessible Square Super Susan	HCSSSW	C-177
Angle Base	AB	C-187
Angle End Base	AEB	C-187
Angled Inside Base	AIBC	C-186
Angled Outside Base	AOBC	C-187
Asymmetrical Base with Full Shelf	ASBC__FS	C-151
Asymmetrical Square Super Susan with Wood Turntables	ASSSW	C-152
Bar Maid	BM	C-175
Base Angle Cabinet	BAC	C-189
Base Angled Corner	BAC	C-188
Base Angled Wall	BAW	C-188
Base Canned Good Storage	BCS	C-163
Base Diagonal Wall	BDW	C-188
Base Dishwasher	BODW	C-170
Base Dishwasher with Drawer	BODWD	C-170
Base Full Height Chrome Pantry with Soft Close	BFCPTYSC	C-166
Base Full Height Door with Tall Roll Out Trays	BF__RTT	C-167
Base Full Height Pantry with Motion Drive Opening	BFPM	C-165
Base Island Assembly - Style A	BIA	C-182
Base Island Assembly - Style B	BIB	C-183
Base Island Assembly - Style C	BIC	C-183
Base Island Assembly - Style E	BIE	C-184
Base Island Assembly - Style F	BIF	C-184
Base Island Unit	BIU	C-180
Base Island Unit - Style B	BIUB	C-181
Base Island Unit - Style C	BIUC	C-181
Base Island Unit - Style D	BIUD	C-181
Base Microwave Tall	BMWT	C-171
Base Mixer Shelf	BMXS	C-172
Base One Drawer	B1D	C-155
Base Oven Cabinet	BOC	C-169
Base Oven/Microwave Cabinet with Drawer	BOCD	C-170
Base Pantry with Chrome/Wood Shelves and Baskets	BPTY	C-166
Base Pantry with OXO Storage	BPOXO	C-166
Base Plastic Ware Storage	BPS	C-172
Base Pull Out Knife Block and Utensil Storage	BPKBU	C-165
Base Pull Out Pantry Utensil Storage	BPU	C-165
Base Tall	BT	C-137
Base Tall Five Drawer	BT5D	C-162
Base Tall Four Drawer	BT4D	C-162
Base Tall Three Drawer	BT3D	C-161
Base Two Drawer above Doors	B2D	C-135
Base Vertical Apothecary Drawer	BVAD	C-186
Base Vertical Wine Rack	BVWR	C-186
Base Wine Diagonal	BWWDIA	C-179
Base with Bread Board	B__BB	C-162
Base with Full Depth Shelf	B__FS	C-136
Base with Full Height Doors	BF	C-138
Base with Mini Pantry	BFP	C-164
Base with Pullouts and Roll Trays	BSP	C-164
Base with Roll Out Tray Divider	BRTTD	C-167
Base with Roll Out Trays	B__RT	C-167
Base with Towel Bar	BSTB	C-138
Base with Wicker Basket Storage	B__WK	C-172
Base with Wine Rack Below Drawer	BXX	C-178
Base Z Door	BZ	C-189
Blind Corner	BC	C-145
Blind Corner Pantry with Chrome/Wood Baskets	BCPTY	C-147
Blind Corner with Magic Corner Shelves	BMC	C-147
Blind Corner with Revolving Slide Out Drawer Front	BCRDF	C-148
Blind Corner with Revolving Slide Out Wood Shelf	BCRSW	C-146
Blind Corner with Roll Out Trays and Door Shelf	BCDRT	C-148
Blind Corner with Swing-out Shelf	BCSOS	C-147
Butcher Block Top	BBTOP	C-180
Curved In Base with Full Shelf	CIB__FS	C-155
Curved In Base with Lazy Susan	CIBLS	C-155
Curved Out Base	COB	C-189-190
Curved Out Base with Open Shelves	COXB	C-190
Curved Round Base End	CRBE	C-191
Diagonal Corner Lazy Susan	DCLS	C-154
Diagonal Corner Lazy Susan with Wood Trays	DCLWS	C-154
Diagonal Corner Sink Base	DCSB	C-144
Diagonal Corner Sink Front	DSF	C-144
Diagonal Corner with Full Shelf	DCB__FS	C-154
Diagonal Lazy Susan with Chrome/Wood Turntables	DCLSCW	C-154
Double Wide Drawer Base for Window Seat	2DB	C-157
Down Draft Range Base	DDRB	C-169
Drawer Base	DB	C-159-160
Drawer Base with Bread Board	DB__BB	C-160
Drawer Base with Bread Liner in Top	DBIF__BL	C-160
Drawer Base with Chopping Block	DB__CB	C-161
Five Drawer Base	5DB	C-161
Four Deep Drawer Base	4DDB	C-159
Four Door Base	4B	C-136
Four Drawer Base with Wide Top Rail	4DBWT	C-168
Full Height Three Door Base	3BF	C-138
Island Peninsula Corner Base	IPB	C-149
Island Peninsula Corner Base with Wide Bottom Rail and Full Shelf	IPBW27FS	C-149
Kitchen Basket Large	KBL	C-173
Kitchen Basket Large with Motion Drive Opening	KBLM	C-174
Kitchen Basket with Motion Drive Opening	KBM	C-173
Kitchen Basket with Motion Drive Opening and Chopping Block	KBM__CB	C-174
Kitchen Waste Basket	KB	C-173
Kitchen Waste Basket with Chopping Block	KB__CB	C-174
Lazy Susan Base	LSB	C-150
Open Shelf Wall Base	WBCF	C-190
Open Shelf Wall Base with Beaded Back	WBCF__BB	C-191
Peninsula Base	PB	C-135
Peninsula Blind Corner	PBC	C-148
Pull Out Pantry with Soft Close	BFPSC	C-164
Quarter Round Base End	QRBE	C-191
Range Base Reverse	RBR	C-168
Range Base Reverse with Roll Out Trays	RBR__RT	C-169
Range Mate	RM	C-171
Recessed Corner Sink Base	RCSB	C-143
Recycle Base	RCB	C-175
Sink/Range Base	SRB	C-140
Sink/Range Base with Angled Stile	SRBA	C-141
Sink/Range Base with Angled Stile and Flutes	SRBA__FL	C-141
Sink/Range Base with Drawer Front Bins	SRBDFB	C-142
Sink/Range Base with Spice Shelf	SRB__SS	C-142
Sink/Range Base with Wide Top Rail	SRBWT	C-142
Square Base Corner with Drawers	SBC__DRW3	C-153
Square Base Corner with Full Shelf	SBC__FS	C-150
Square Base Corner with Revolving Slide Shelf	SBC__RSS	C-153
Square Corner Sink Base	SBC	C-144
Square Lazy Susan Base	SLSB	C-153
Square Super Susan	SSS	C-151
Square Super Susan with Chrome/Wood Turntables	SSSCW	C-152

© Copyright StarMark Cabinetry MARCH 2021

Index

Description	Nomenclature	Page
Square Super Susan with Wood Turntables	SSSW	C-151
Standard Base	B	C-135
Super Sink Base	SSB	C-143
Tall Full Height Base	BFT	C-139
Three Deep Drawer Base	3DDB	C-159
Three Door Base	3B	C-136
Three Drawer Base	3DB	C-157
Three Drawer Base with Bread Board	3DB_BB	C-157
Three Drawer Base with Chopping Block	3DB_CB	C-158
Three Drawer Base with Partitions and Cutlery Divider	3DB_DPCD	C-158
Three Drawer Base with Warming Drawer	3DBWAR	C-158
Tray Base	TB	C-137
Tray Base with Drawer Above	BTB	C-137
Two Drawer Base	2DB	C-156
Two Drawer Base with Roll Out Tray	2DB_RT	C-156
Two Drawer Base with Vegetable Drawer	2DB_VG	C-156
Two Drawer Base with Wide Top Rail	DBWT	C-168
Wall Base Criss Cross Wine Rack	WBXXW	C-178
Wall Base Tall	WBT	C-140
Wall Base Tall with Paper Towel Dispenser	WBTPTD	C-140
Wall Base Wine Cubes	WB0734CUB5/ WBT0740CUB6	C-179
Wall Base Wine Rack	WB2W	C-179
Wall Base with Toe Space	WB	C-139
Wall Base with Wine Rack Below Open Shelf	WBXWX	C-178

© Copyright StarMark Cabinetry MARCH 2021

Standards for Single Door Base Cabinets

- Depth is 24".
- Vertical stiles on the cabinet frame are 1½" wide.
- Horizontal rails on the cabinet frame are 1½" high.
- Toe kick height is 4".
- Toe kick recess is 2⅝".
- Door opening height is 20¾".
- Drawer opening height is 5¼".
- To compute the door/drawer opening width on a **single door** standard base cabinet, subtract 3" from cabinet width.
- For any standard base cabinet with **full height doors**, the height opening is 27½". To compute the door/drawer opening width, subtract 3" from cabinet width.
- Arched door styles are NOT available in base cabinets.
- Openings are designed for the best possible alignment on Modern Overlay. See C-129.

Standards for Double Door Base Cabinets

- Depth is 24".
- Vertical stiles on the cabinet frame are 1½" wide.
- Horizontal rails on the cabinet frame are 1½" high.
- Toe kick height is 4".
- Toe kick recess is 2⅝".
- Door opening height is 20¾".
- Drawer opening height is 5¼".
- A prefix of "2" denotes a cabinet built with butt doors. The cabinet is considered "full access" because there is no center mullion.
- Butt doors are not available in cabinets that are wider than 42". Cabinets wider than 42" will have a fixed center mullion. A fixed center mullion is necessary for stability.
- Butt door cabinets have full width drawers.
- To compute the width of an individual door opening on a **Double Door** standard base cabinet, subtract 6" from the cabinet width and divide by 2.
- To compute the width of an individual door opening on a **Butt Door** standard base cabinet, subtract 3" from the width and divide by 2.
- For any standard base cabinet with **full height doors**, the height opening is 27½". Width opening is calculated using the same formulas described above.
- Arched door styles are NOT available in base cabinets.

- See the **HelpZone** for information on designing and installing base cabinets diagonally in a corner

© Copyright StarMark Cabinetry **MARCH 2021**

Base Cabinet Frame Openings Alignment

2AB
3BF
AEB
AIBC
AOBC
ASBC
ASSSW
BAC
BCS
BDW
BF
BF**RTT
BFP
BMC
BMXS
BSP
BZ
CIB

CIBLS
COB
DCB
DCLS
DCLSCW
DCLWS
KBL
KBLM
LSB
SBC
SBC**RSS
SLSB
SSS
SSSCW
SSSW
TB
WB

DB
DBXXCB

B2D

2IPB
2IPBW
3B
4B
B
B**RT
BC
BCDRT
BCPTY
BCSOS
BPTY
BRTTD

BTB
DCSB
DDRB
DSF
KB
KBM
KB**CB
KBM**CB
PB
PBC
RCB
RCSB
RM
SRB
SRBA
SRBDFB

SBC**DRW3
3DB
3DB**CB

BM

3DB**BB

DB**BB

B**BB

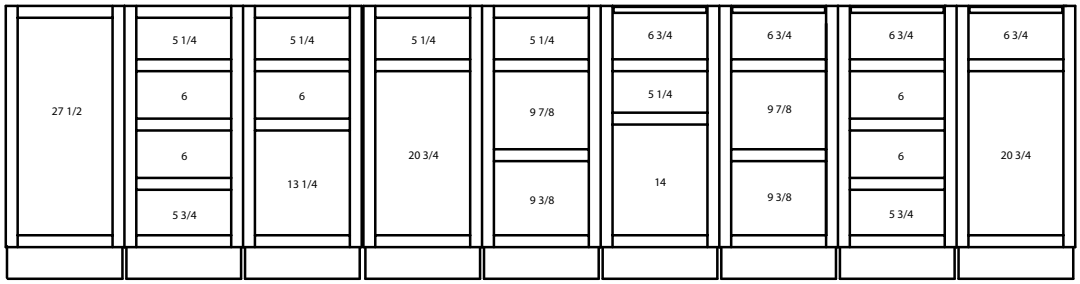

5DB

RBR
RBR**RT

DBIF**BL

3DB**DPCD

2DB
2DB**RT
2DB**VG
3DDB
4DDB

SRBWT

3DBWAR

2DBWT
4DBWT

BOCD

WBPTD

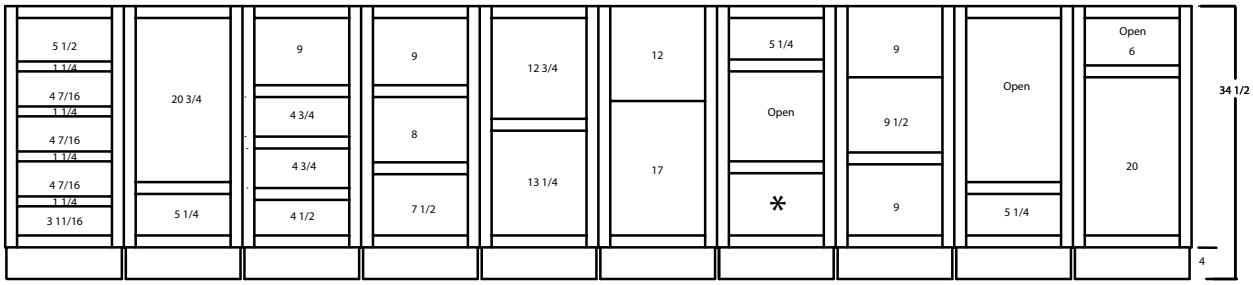

WB2W

BOC,
1"TOP
HEADER
OPTION

BWWDIA

BVAD

B1D
B2D48-42

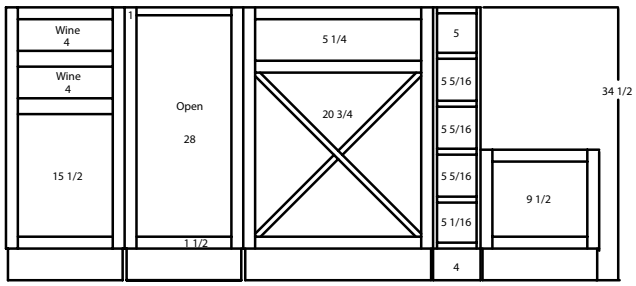

BMWT

BFT
WBT

BT

BT3D

BT5D

BT4D

BODW

BODWD

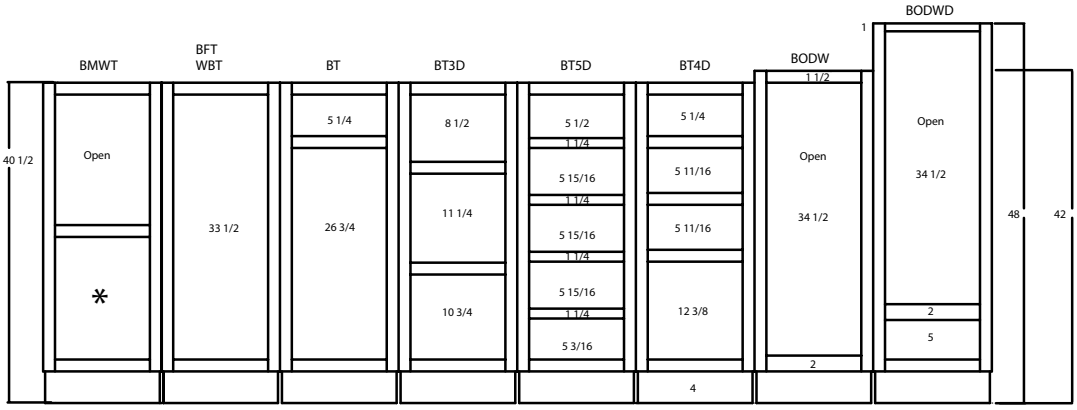

© Copyright StarMark Cabinetry MARCH 2021

I available in Inset cabinetry

Face Frame Dimensions for Base Cabinets

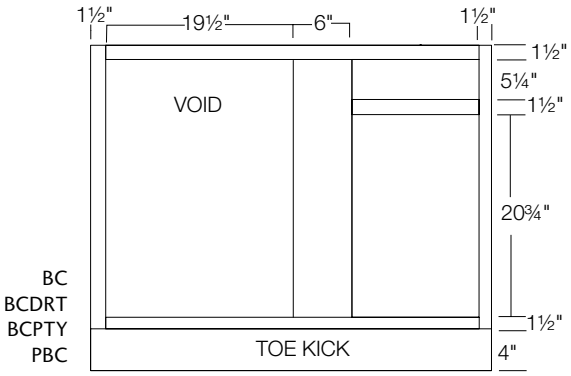

BC
BCDRT
BCPTY
PBC

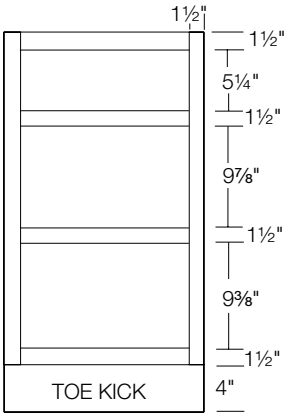

3DB
3DB-CB

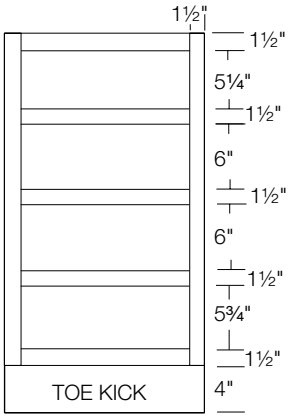

DB
DB-CB

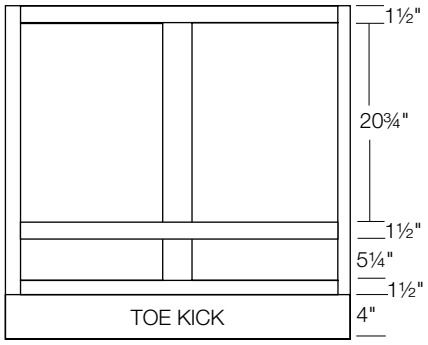

RBR

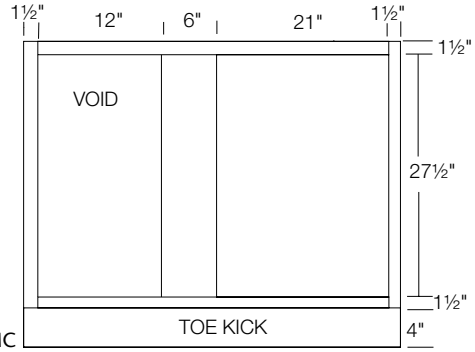

BMC

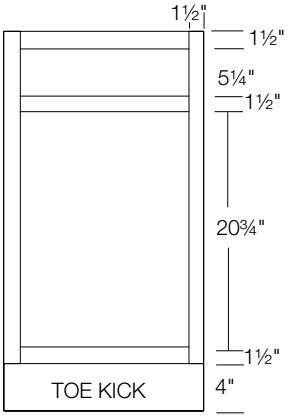

B
B-FS
B-BB
BPTY
B-RT
BTB
B-WK
BWWDIA
DCSB
DSF
DDRB
IPB

IPBW
KB
KB-CB
RM
RCB
RCSB
PB
SRB
SRBA
SSB

AB
AEB
ASBC
ASSSW
2BSP
BAC
BCS
BDW
BF
BFP
BF-RTT
BMXS
BWWC
CIBFS
CIBLS
COB

COXB
DCB-FS
DCLS
DCLSCW
LSB
SBC
SBC-FS
SBC-RSS
SLSB
SSS
SSSCW
SSSW
TB
WB
WBXXW

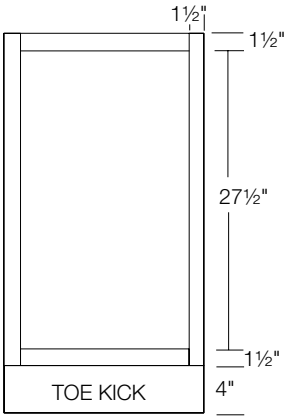

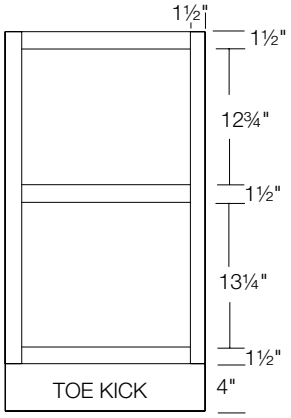

2DB
3DDB
4DDB

© Copyright StarMark Cabinetry MARCH 2021

Face Frame Dimensions for Base Cabinets

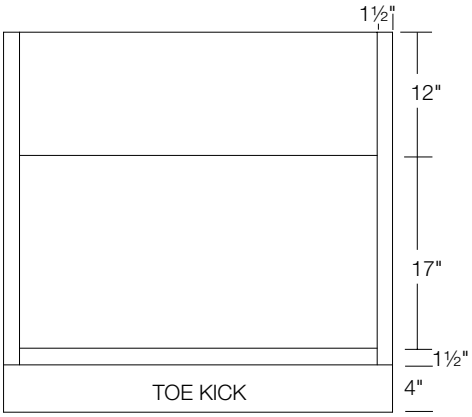

SRBWT

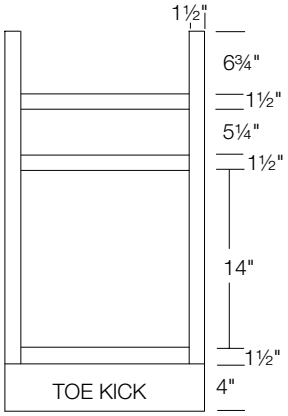

BM

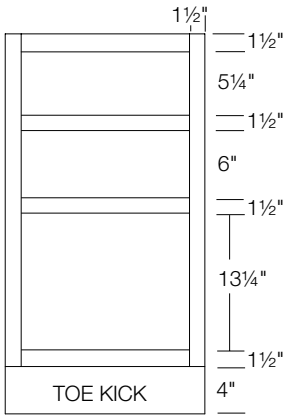

B2D

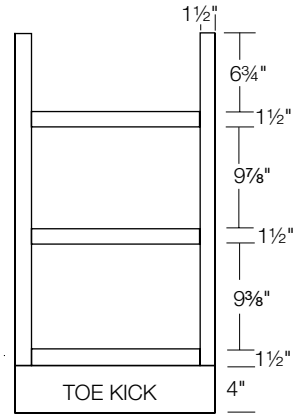

3DB-BB

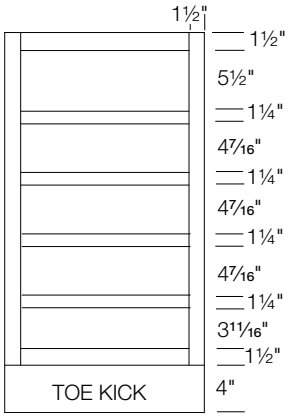

5DB

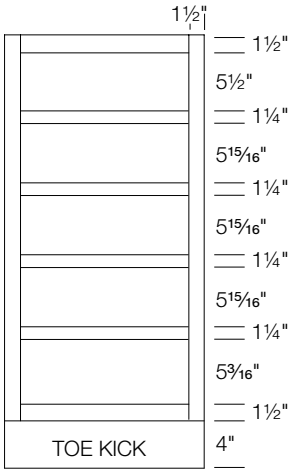

BT5D

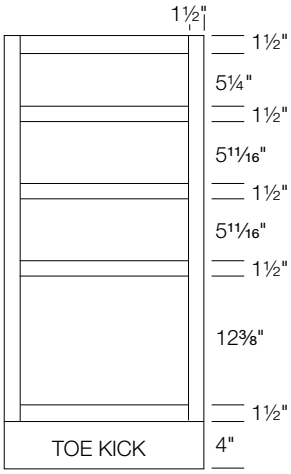

BT4D

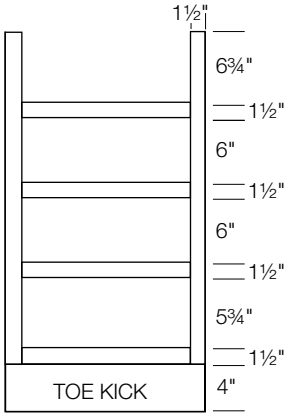

DB-BB

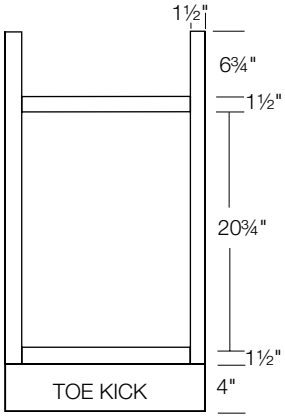

B-BB

© Copyright StarMark Cabinetry MARCH 2021

I available in Inset cabinetry

ADA Accessible Cabinet Alignment

ADA Accessible Cabinets Frame Openings Alignment

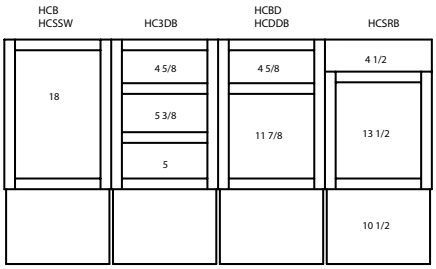

- Depth is 24".
- Height is 31½"
- Toe kick height is 10½".
- Toe kick depth is 9.
- Door opening height is 11⅞".
- Drawer opening height is 4⅝".

Modern Overlay Door and Drawer Sizing Alignment

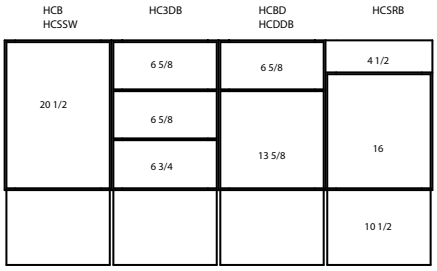

Traditional Overlay Door and Drawer Sizing Alignment

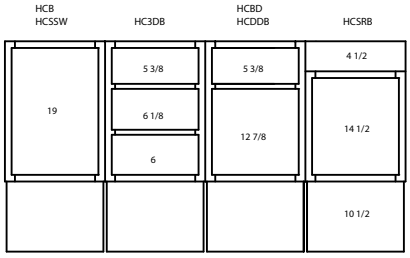

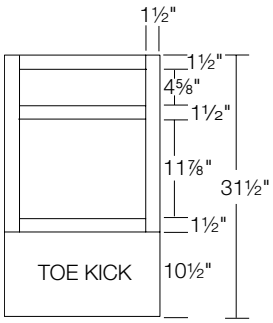

HCBD
HCDDB

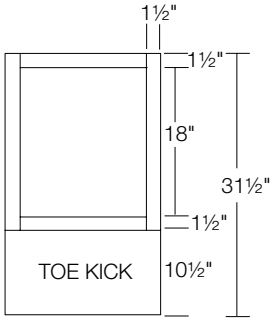

HCB
HCSSW

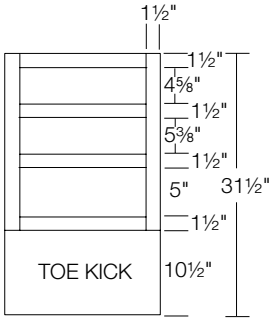

HC3DB

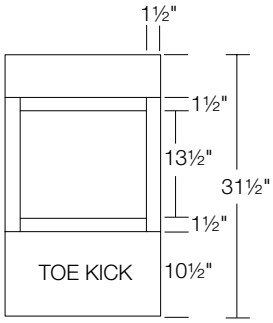

HCSRB

This icon indicates that this product is illustrated in the Products in Color Section.

This icon indicates that this product is available in Inset Cabinetry

© Copyright StarMark Cabinetry MARCH 2021

Base Island Cabinet Frame Openings Alignment

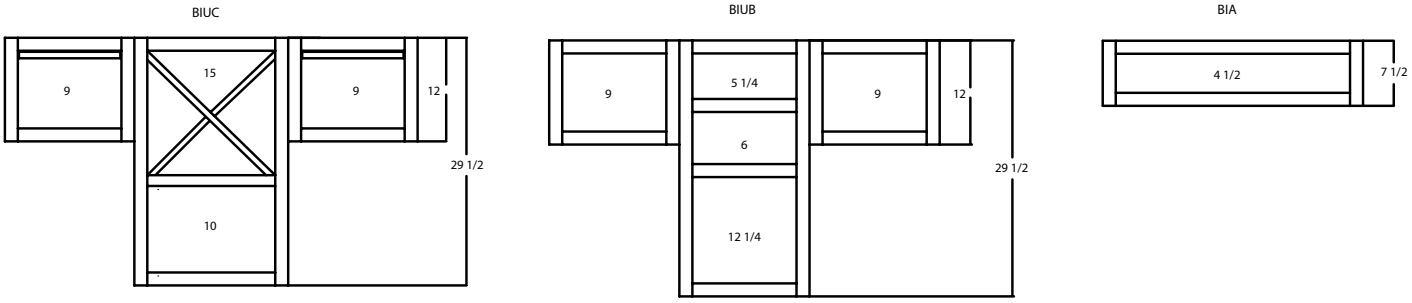

Base Island Cabinet Door and Drawer Sizing Alignment

Modern Overlay

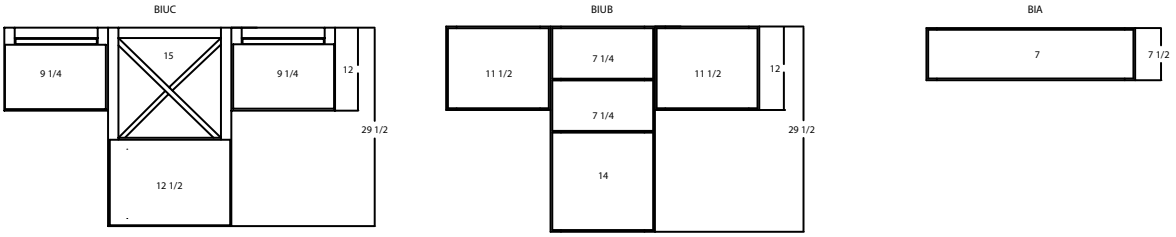

Traditional Overlay

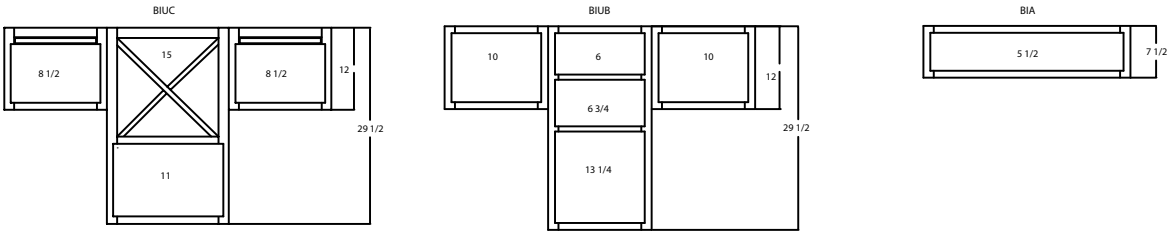

© Copyright StarMark Cabinetry MARCH 2021

Base Cabinet Door and Drawer Sizing Alignment

Modern Overlay

2AB
3BF
AEB
AIBC
AOBC
ASBC
ASSSW
BAC
BCS
BDW
BF
BF**RTT
BFP
BMC
BMXS
BSP
BZ
CIB

CIBLS
COB
DCB
DCLS
DCLSCW
DCLWS
KBL
KBLM
LSB
SBC
SBC**RSS
SLSB
SSS
SSSCW
SSSW
TB
WB

DB
DBXXCB

B2D

2IPB
2IPBW
3B
4B
B
B**RT
BC
BCDRT
BCPTY
BCSOS
BPTY
BRTTD

BTB
DCSB
DDRB
DSF
KB
KBM
KB**CB
KBM**CB
PB
PBC
RCB
RCSB
RM
SRB
SRBA
SRBDFB

SBC**DRW3
3DB
3DB**CB

BM

3DB**BB

DB**BB

B**BB

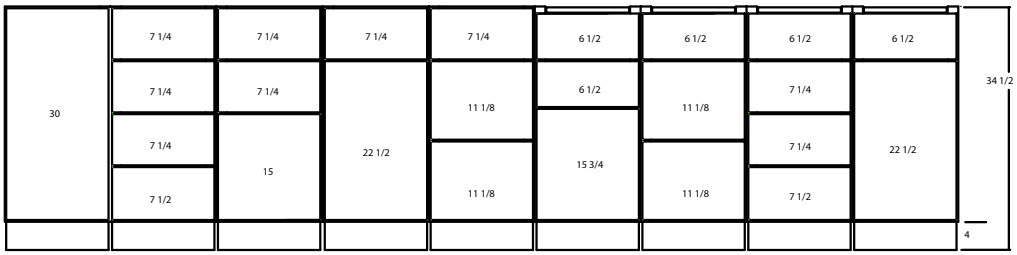

5DB

RBR
RBR**RT

DBIF**BL

3DB**DPCD

2DB
2DB**RT
2DB**VG
3DDB
4DDB

SRBWT

3DBWAR

2DBWT
4DBWT

BOCD

WBPTD

WB2W

BOC,
1"TOP
HEADER
OPTION

BWWDIA

BVAD

B1D
B2D48-42

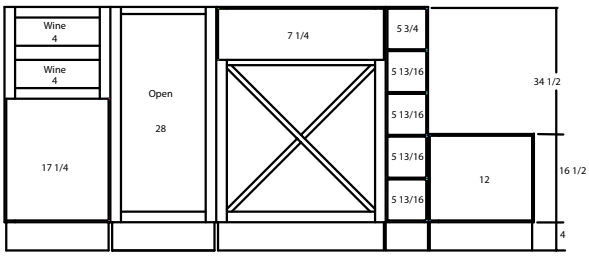

BMWT

BFT
WBT

BT

BT3D

BT5D

BT4D

BODW

BODWD

© Copyright StarMark Cabinetry MARCH 2021

Base Cabinet Alignment Door and Drawer Sizing
Traditional Overlay

2AB
3BF
AEB
AIBC
AOBC
ASBC
ASSSW
BAC
BCS
BDW
BF
BF**RTT
BFP
BMC
BMXS
BSP
BZ
CIB

CIBLS
COB
DCB
DCLS
DCLSCW
DCLWS
KBL
KBLM
LSB
SBC
SBC**RSS
SLSB
SSS
SSSCW
SSSW
TB
WB

DB
DBXXCB

B2D

2IPB
2IPBW
3B
4B
B
B**RT
BC
BCDRT
BCPTY
BCSOS
BPTY
BRTTD

BTB
DCSB
DDRB
DSF
KB
KBM
KB**CB
KBM**CB
PB
PBC
RCB
RCSB
RM
SRB
SRBA
SRBDFB

SBC**DRW3
3DB
3DB**CB

BM

3DB**BB

DB**BB

B**BB

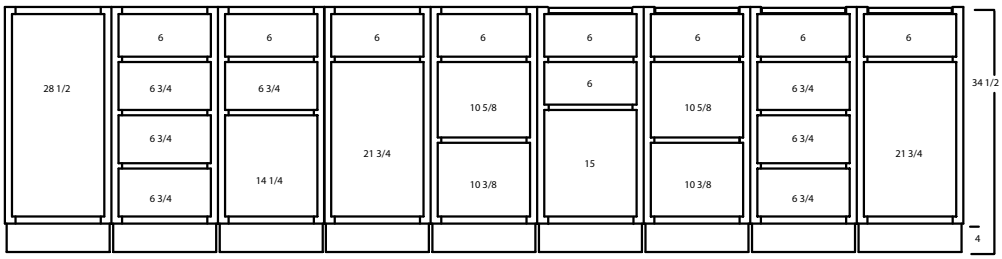

5DB

RBR
RBR**RT

DBIF**BL

3DB**DPCD

2DB
2DB**RT
2DB**VG
3DDB
4DDB

SRBWT

3DBWAR

2DBWT
4DBWT

BOCD

WBPTD

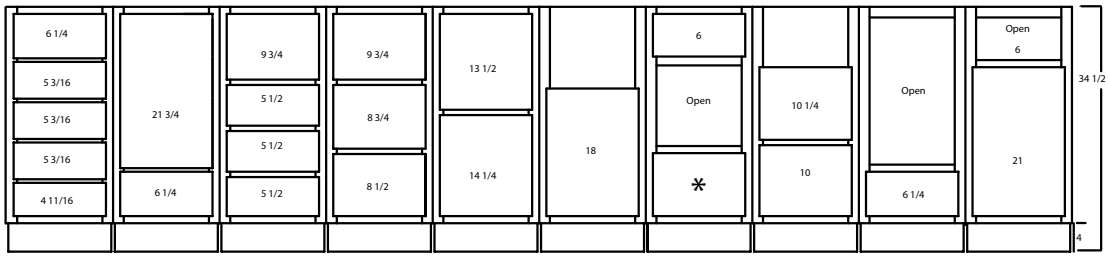

WB2W

BOC,
1"TOP
HEADER
OPTION

BWWDIA

BVAD

B1D
B2D48-42

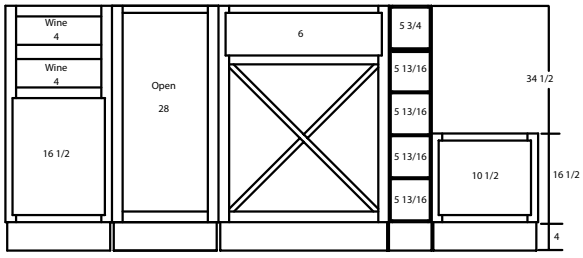

BMWT

BFT
WBT

BT

BT3D

BT5D

BT4D

BODW

BODWD

© Copyright StarMark Cabinetry MARCH 2021

I available in Inset cabinetry

Block 3000 Standard Base

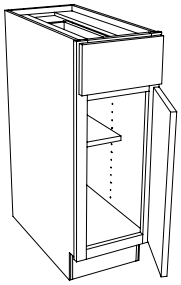

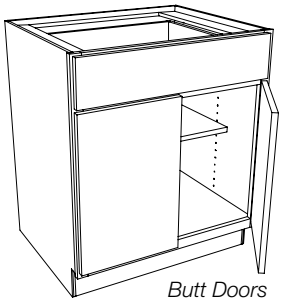

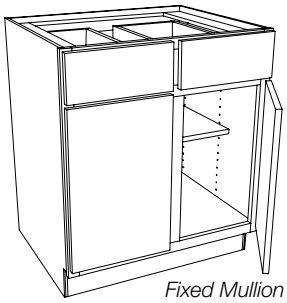

Single Door
B09
B12
B135
B15
B165
B18
B195
B21
B225
B24

Butt Doors
2B24
2B27
2B30
2B33
2B36
2B39
2B42

Fixed Mullion
B30
B33
B36
B39
B42
B45
B48

DESIGN CONSIDERATIONS

34½" High - 24" Deep
- 1 adjustable ⅔ depth shelf
- 9" wide cabinets specified in a Traditional overlay door style with a 5-piece drawer header will receive a slab drawer header

HOW TO ORDER

- Specify **L** or **R** hinging on Single Door cabinet
- B135, B165, B195 and B225 are half sizes. For example B135 is 13½" wide.
- Pricing P-141

NOTES/CAUTION

- 9" wide cabinets not available in inset.

Block 3001 Base Two Drawer above Doors

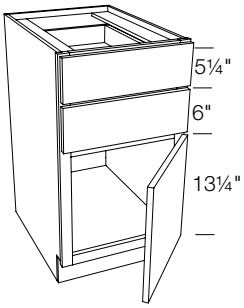

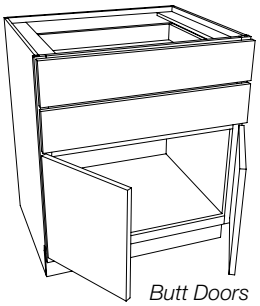

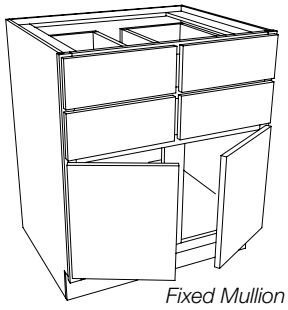

Single Door
B2D12
B2D135
B2D15
B2D165
B2D18
B2D195
B2D21
B2D225
B2D24

Butt Doors
2B2D24
2B2D27
2B2D30
2B2D33
2B2D36
2B2D39
2B2D42

Fixed Mullion
B2D30
B2D33
B2D36
B2D39
B2D42
B2D45
B2D48

DESIGN CONSIDERATIONS

34½" High - 24" Deep
- No shelf

HOW TO ORDER

- Specify **L** or **R** hinging on Single Door cabinet
- B2D135, B2D165, B2D195, and B2D225 are half sizes. For example B2D135 is 13½" wide.
- Pricing P-141

Block 3010 Peninsula Base

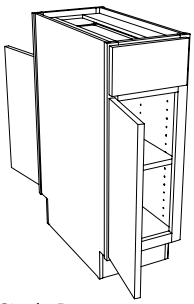

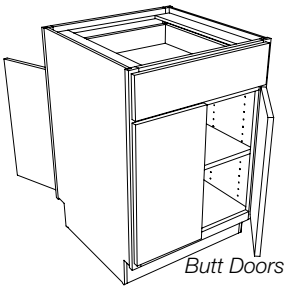

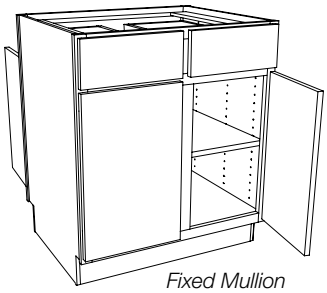

Single Door
PB12
PB135
PB15
PB165
PB18
PB195
PB21
PB225
PB24

Butt Doors
2PB24
2PB27
2PB30
2PB33
2PB36
2PB39
2PB42

Fixed Mullion
PB30
PB36
PB39
PB42
PB45
PB48

DESIGN CONSIDERATIONS

34½" High - 24" Deep
- 1 adjustable full depth shelf
- Peninsula single door is hinged on the same side of cabinet as kitchen single door

HOW TO ORDER

- Specify **L** or **R** hinging on Single Door cabinet
- PB135, PB165, PB195, and PB225 are half sizes. For example PB135 is 13½" wide.
- Pricing P-142

© Copyright StarMark Cabinetry MARCH 2021

Block 3020 Base with Full Depth Shelf

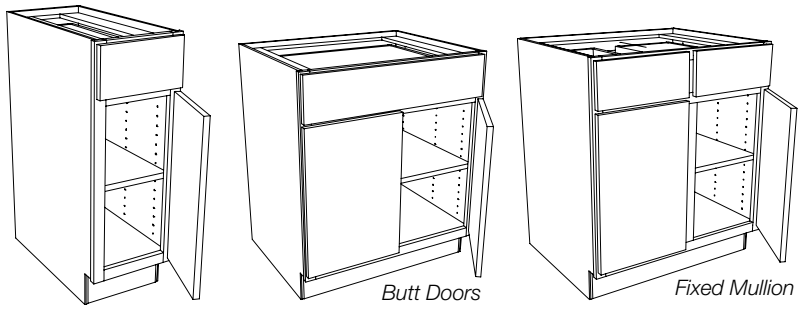

Single Door
B12FS
B135FS
B15FS
B165FS
B18FS
B195FS
B21FS
B225FS
B24FS

Butt Doors
2B24FS
2B27FS
2B30FS
2B33FS
2B36FS
2B39FS
2B42FS

Fixed Mullion
B30FS
B33FS
B36FS
B39FS
B42FS
B45FS
B48FS

DESIGN CONSIDERATIONS

34½" High - 24" Deep

- 1 adjustable full depth shelf

HOW TO ORDER

- Specify **L** or **R** hinging on Single Door cabinet
- B135FS, B165FS, B195FS, and B225FS are half sizes. For example B135FS is 13½" wide.
- Pricing P-142

Block 3027 Three Door Base

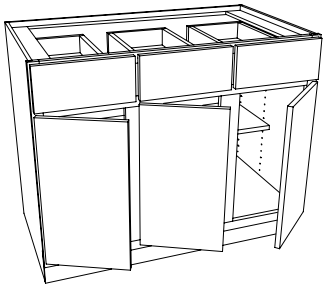

3B36
3B39
3B42
3B45
3B48
3B51
3B54
3B57
3B60
3B63
3B66
3B69
3B72

Cabinet Width	Three equal openings
36"	9"
39"	10"
42"	11"
45"	12"
48"	13"
51"	14"
54"	15"
57"	16"
60"	17"
63"	18"
66"	19"
69"	20"
72"	21"

DESIGN CONSIDERATIONS

34½" High - 24" Deep

- 1 adjustable ⅔ depth shelf
- Three equal openings

HOW TO ORDER

- Specify **L** or **R** hinging for all three doors, starting with the left door. For example: LLR left door hinge left, middle door hinge left, right door hinge right.
- Cabinets wider than 48" include a partition behind one center mullion. Specify **L** left or **R** right.
- Pricing P-143

Block 3028 Four Door Base

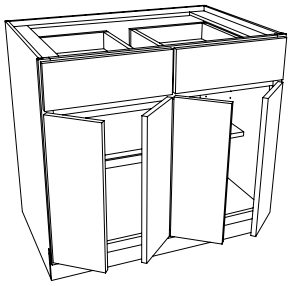

4B48
4B51
4B54
4B57
4B60
4B63
4B66
4B69
4B72

DESIGN CONSIDERATIONS

34½" High - 24" Deep

- 1 adjustable ⅔ depth shelf
- Two sets of butt doors
- Cabinets wider than 48" include a partition separating the two door openings.

HOW TO ORDER

- Pricing P-143

Cabinet Width	Two equal openings
48"	21"
51"	22½"
54"	24"
57"	25½"
60"	27"
63"	28½"
66"	30"
69"	31½"
72"	33"

© Copyright StarMark Cabinetry MARCH 2021

Block 3029 Base Tall

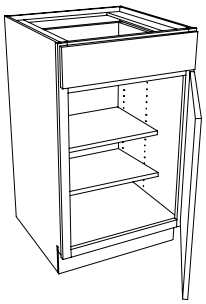

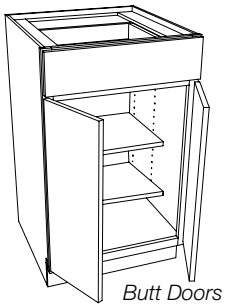

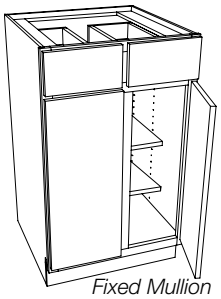

Single Door
BT09
BT12
BT135
BT15
BT165
BT18
BT195
BT21
BT225
BT24

Butt Doors
2BT24
2BT27
2BT30
2BT33
2BT36
2BT39
2BT42

Fixed Mullion
BT30
BT33
BT36
BT39
BT42
BT45
BT48

DESIGN CONSIDERATIONS
40½" High - 24" Deep
- 2 adjustable ⅔ depth shelves
- 9" wide cabinets specified in a Traditional overlay door style with a 5-piece drawer header will receive a slab drawer header

HOW TO ORDER
- Specify **L** or **R** hinging on Single Door cabinet
- BT135, BT165, BT195, and BT225 are half sizes. For example BT135 is 13½" wide.
- Pricing P-144

NOTES/CAUTION
- 9" wide cabinets not available in inset.

Block 3030 Tray Base

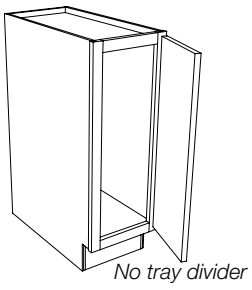

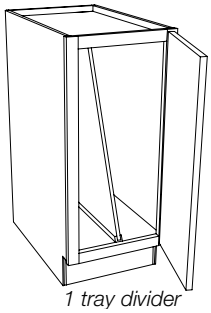

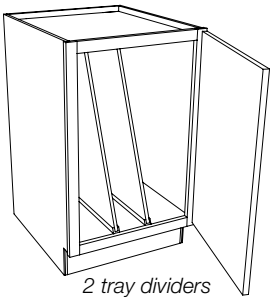

No tray divider
TB09
TB12

One tray divider
TB15
TB18

Two tray dividers
TB21
TB24

DESIGN CONSIDERATIONS
34½" High - 24" Deep

HOW TO ORDER
- Specify **L** or **R** hinging
- Pricing P-144

NOTES/CAUTION
- 9" wide cabinets not available in inset.

Block 3031 Tray Base with Drawer Above

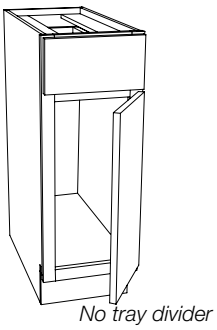

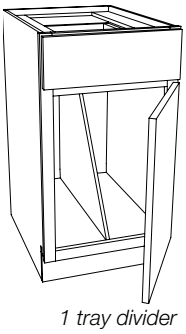

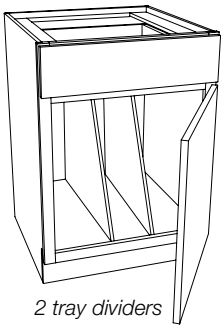

No tray divider
BTB09
BTB12

One tray divider
BTB15
BTB18

Two tray dividers
BTB21
BTB24

DESIGN CONSIDERATIONS
34½" High - 24" Deep
- 9" wide cabinets specified in a Traditional overlay door style with a 5-piece drawer header will receive a slab drawer header

HOW TO ORDER
- Specify **L** or **R** hinging
- Pricing P-145

NOTES/CAUTION
- 9" wide cabinets not available in inset.

© Copyright StarMark Cabinetry MARCH 2021

Block 3032 Base with Towel Bar

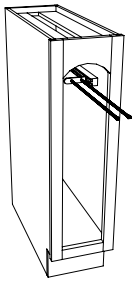

BSTB09
BSTB12

DESIGN CONSIDERATIONS

34½" High - 24" Deep

- No shelf
- Finished veneer interior
- Eyebrow valance is standard

HOW TO ORDER

- Includes slide out towel bar. Specify Left (STBKL) or Right (STBKR)
- Pricing P-145

Block 3040 Base with Full Height Doors

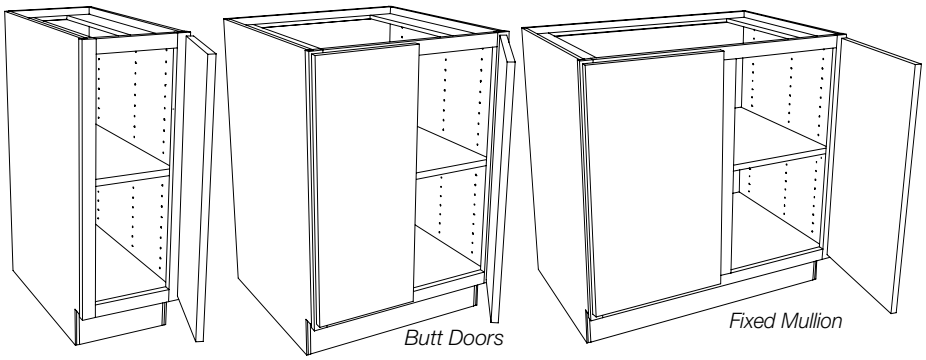

Single Door
BF09
BF12
BF135
BF15
BF165
BF18
BF195
BF21
BF225
BF24

Butt Doors
2BF24
2BF27
2BF30
2BF33
2BF36
2BF39
2BF42

Fixed Mullion
BF36
BF39
BF42
BF45
BF48

DESIGN CONSIDERATIONS

34½" High - 24" Deep

- 1 adjustable full depth shelf

HOW TO ORDER

- Specify **L** or **R** hinging on Single Door cabinet
- BF135, BF165, BF195, and BF225 are half sizes. For example BF135 is 13½" wide.
- Pricing P-146

NOTES/CAUTION

- 9" wide cabinets not available in inset.

Block 3041 Full Height Three Door Base

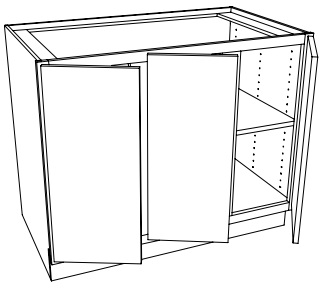

3BF36
3BF39
3BF42
3BF45
3BF48
3BF51
3BF54
3BF57
3BF60
3BF63
3BF66
3BF69
3BF72

Cabinet Width	Three equal openings
36"	9"
39"	10"
42"	11"
45"	12"
48"	13"
51"	14"
54"	15"
57"	16"
60"	17"
63"	18"
66"	19"
69"	20"
72"	21"

DESIGN CONSIDERATIONS

34½" High - 24" Deep

- 1 adjustable full depth shelf
- Three equal openings

HOW TO ORDER

- Specify **L** or **R** hinging for all three doors, starting with the left door. For example: LLR left door hinge left, middle door hinge left, right door hinge right.
- Cabinets wider than 48" include a partition behind one center mullion. Specify **L** left or **R** right.
- Pricing P-146

© Copyright StarMark Cabinetry MARCH 2021

Block 3042 Tall Full Height Base

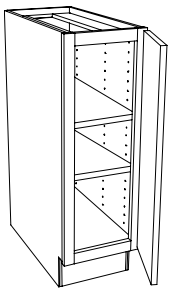

Single Door
BFT09
BFT12
BFT135
BFT15
BFT165
BFT18
BFT195
BFT21
BFT225
BFT24

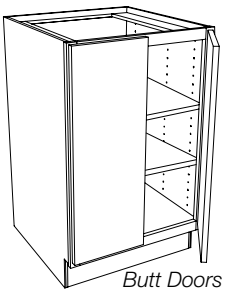

Butt Doors
2BFT24
2BFT27
2BFT30
2BFT33
2BFT36
2BFT39
2BFT42

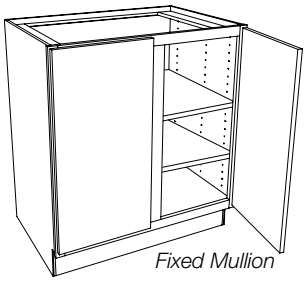

Fixed Mullion
BFT36
BFT39
BFT42
BFT45
BFT48

DESIGN CONSIDERATIONS

40½" High - 24" Deep

- 2 adjustable full depth shelves

HOW TO ORDER

- Specify **L** or **R** hinging on Single Door cabinet
- BFT135, BFT165, BFT195, and BFT225 are half sizes. For example BFT135 is 13½" wide.
- Pricing P-147

NOTES/CAUTION

- 9" wide cabinets not available in inset.

Block 3045 Wall Base with Toe Space

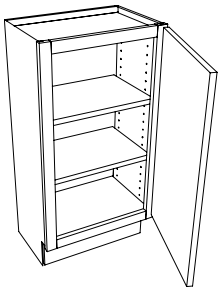

Single Door
WB0934
WB1234
WB13534
WB1534
WB16534
WB1834
WB19534
WB2134
WB22534
WB2434

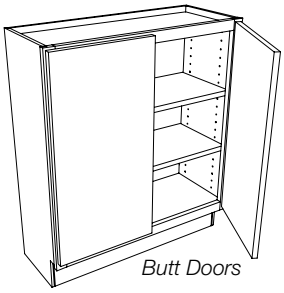

Butt Doors
2WB2434
2WB2734
2WB3034
2WB3334
2WB3634
2WB3934
2WB4234

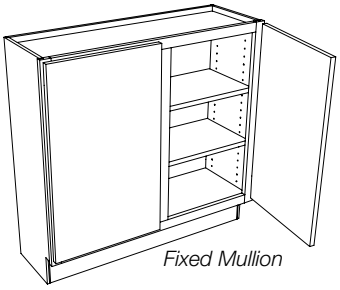

Fixed Mullion
WB3634
WB3934
WB4234
WB4834

DESIGN CONSIDERATIONS

34½" High - 12" Deep

- 2 adjustable full depth shelves

HOW TO ORDER

- Specify **L** or **R** hinging on Single Door cabinet
- WB13534, WB16534, WB19534, and WB22534 are half sizes. For example WB13534 is 13½" wide.
- Pricing P-148

NOTES/CAUTION

- 9" wide cabinets not available in inset.

© Copyright StarMark Cabinetry MARCH 2021

Block 3046 Wall Base Tall

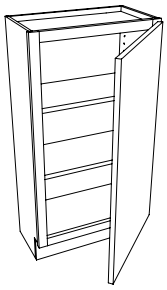

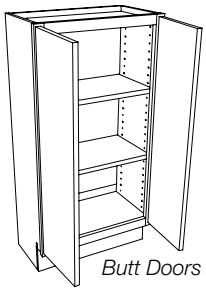

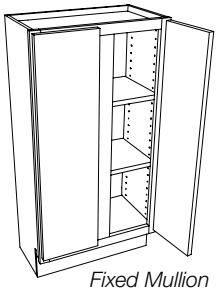

Single Door
WBT1240
WBT13540
WBT1540
WBT16540
WBT1840
WBT19540
WBT2140
WBT22540
WBT2440

Butt Doors
2WBT2440
2WBT2740
2WBT3040
2WBT3340
2WBT3640
2WBT3940
2WBT4240

Fixed Mullion
WBT3640
WBT3940
WBT4240
WBT4840

DESIGN CONSIDERATIONS

40½" High - 12" Deep

- 2 adjustable full depth shelves

HOW TO ORDER

- Specify **L** or **R** hinging on Single Door cabinet
- WBT13540, WBT16540, WBT9540, and WBT22540 are half sizes. For example WBT13540 is 13½" wide.
- Pricing P-148

Block 3047 Wall Base with Paper Towel Dispenser

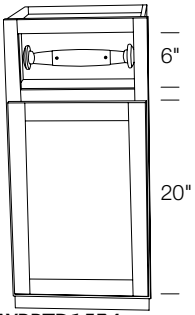

WBPTD1534
WBPTD1834

DESIGN CONSIDERATIONS

34½" High - 12" Deep

- 1 adjustable full depth shelf
- No width modifications
- Finished veneer interior
- 6" top opening with false back and paper towel dispenser attached
- 11" wide x 4" deep paper towel dispenser is clear with brushed stainless steel accents

HOW TO ORDER

- Specify **L** or **R** hinging
- Pricing P-149

Block 3050 Sink/Range Base

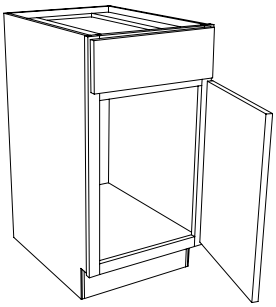

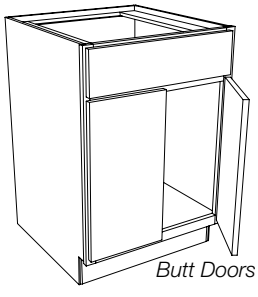

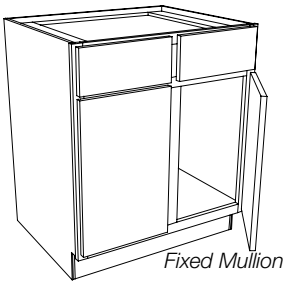

Single Door
SRB15
SRB18
SRB21
SRB24

Butt Doors
2SRB24
2SRB27
2SRB30
2SRB33
2SRB36
2SRB39
2SRB42

Fixed Mullion
SRB30
SRB33
SRB36
SRB39
SRB42
SRB45
SRB48

DESIGN CONSIDERATIONS

34½" High - 24" Deep

- No shelf or drawer
- Fixed drawer header
- Full back

HOW TO ORDER

- Specify **L** or **R** hinging on Single Door cabinet
- Pricing P-149

© Copyright StarMark Cabinetry MARCH 2021

I available in Inset cabinetry

Block 3051 Sink/Range Base with Angled Stile

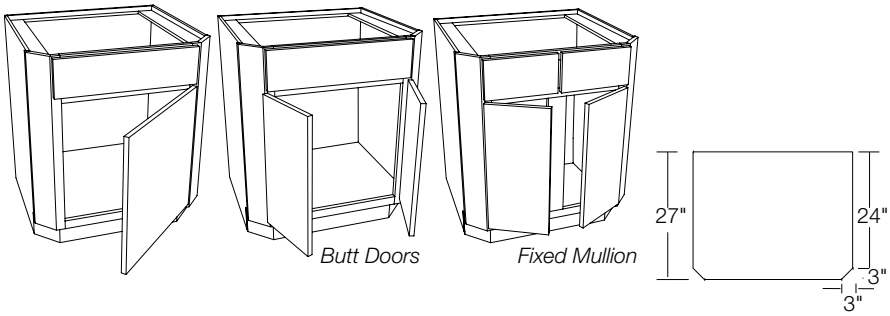

Single Door
SRBA18
SRBA21
SRBA24
SRBA27
SRBA30

Butt Doors
2SRBA30
2SRBA33
2SRBA36
2SRBA39
2SRBA42
2SRBA45
2SRBA48

Fixed Mullion
SRBA45
SRBA48

DESIGN CONSIDERATIONS

34½" High - 27" Deep

- No shelf or drawer
- Fixed drawer header
- 24" deep at end panels
- 27" deep overall
- Full back

HOW TO ORDER

- If ordered with a STBK (10260) you need to specify a partition. See block 9380.
- Specify **L** or **R** hinging on Single Door cabinet
- Pricing P-150

Cabinet Width	Sink Area	Face Frame Opening
18	12"	9"
21	15"	12"
24	18"	15"
27	21"	18"
30	24"	21"
33	27"	24"
36	30"	27"
39	33"	30"
42	36"	33"
45	39"	2 (16½" openings)
48	42"	2 (18" openings)

Block 3052 Sink/Range Base with Angled Stile and Flutes

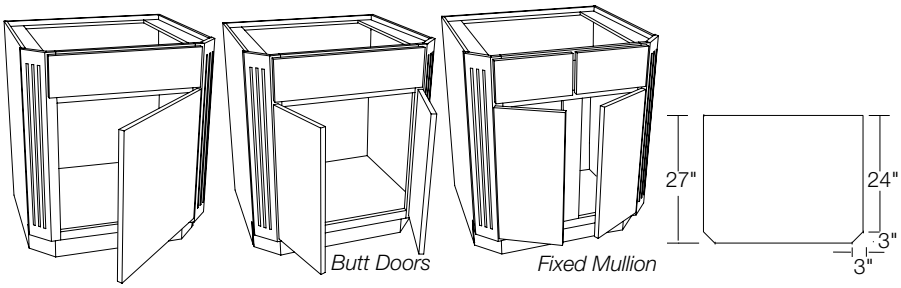

Single Door
SRBA18FL
SRBA21FL
SRBA24FL
SRBA27FL
SRBA30FL

Butt Doors
2SRBA30FL
2SRBA33FL
2SRBA36FL
2SRBA39FL
2SRBA42FL
2SRBA45FL
2SRBA48FL

Fixed Mullion
SRBA45FL
SRBA48FL

DESIGN CONSIDERATIONS

34½" High - 27" Deep

- No shelf or drawer
- Fixed drawer header
- 24" deep at end panels
- 27" deep overall
- Flutes stop 2" from top and bottom unless otherwise specified.
- Full back

HOW TO ORDER

- Specify **L** or **R** hinging on Single Door cabinet
- If ordered with a STBK (10260) you need to specify a partition. See block 9380.
- Pricing P-150

Cabinet Width	Sink Area	Face Frame Opening
18	12"	9"
21	15"	12"
24	18"	15"
27	21"	18"
30	24"	21"
33	27"	24"
36	30"	27"
39	33"	30"
42	36"	33"
45	39"	2 (16½" openings)
48	42"	2 (18" openings)

© Copyright StarMark Cabinetry MARCH 2021

Block 3053 Sink/Range Base with Drawer Front Bins

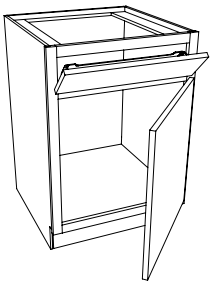

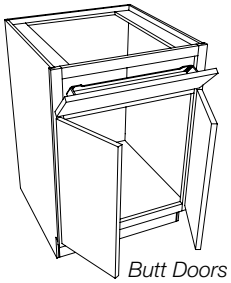

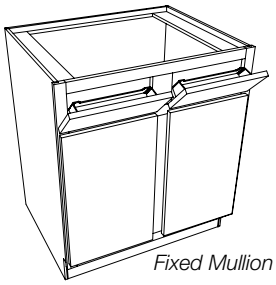

Single Door
SRBDFB15
SRBDFB18
SRBDFB21
SRBDFB24

Butt Doors
2SRBDFB24
2SRBDFB27
2SRBDFB30
2SRBDFB33
2SRBDFB36
2SRBDFB39
2SRBDFB42

Fixed Mullion
SRBDFB30
SRBDFB33
SRBDFB36
SRBDFB39
SRBDFB42
SRBDFB45
SRBDFB48

DESIGN CONSIDERATIONS

34½" High - 24" Deep

- No shelf or drawer
- Stainless steel bins mounted to drawer header
- Soft close hinges on drawer front bins
- Full back

Cabinet width	Number of drawer front bins
15", 18", 21", 24", 27"	1
30", 33", 36", 39"	2
42", 45", 48"	2

HOW TO ORDER

- Specify **L** or **R** hinging on Single Door cabinet
- Pricing P-151

INSTALLATION TIP

- Verify bowl size to ensure bins function properly
- Drawer front bins may not work properly with an undermount sink installation.

Block 3055 Sink/Range Base with Wide Top Rail

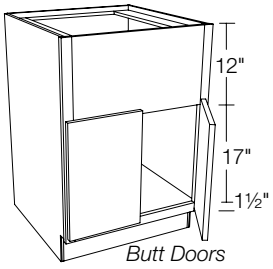

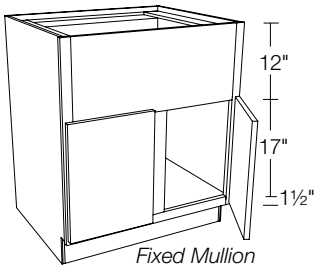

Butt Doors
2SRBWT24
2SRBWT27
2SRBWT30
2SRBWT33
2SRBWT36
2SRBWT39
2SRBWT42

Fixed Mullion
SRBWT39
SRBWT42
SRBWT45
SRBWT48

DESIGN CONSIDERATIONS

34½" High - 24" Deep

- Use this base cabinet to accommodate apron sinks and special cooktops
- No shelf
- Full back
- 11½" reveal on wide top rail above doors

HOW TO ORDER

- Pricing P-151

INSTALLATION TIP

- Trim the wide top rail on the jobsite
- Depending on the type of sink or counter top, additional bracing may be required to be installed on the jobsite.

Block 3057 Sink/Range Base with Spice Shelf

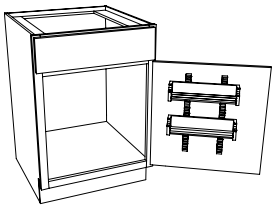

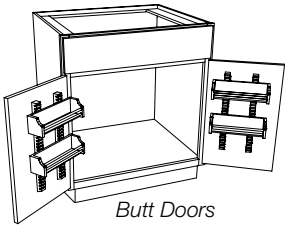

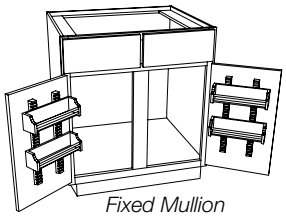

Single Door
SRB15SS
SRB18SS
SRB21SS
SRB24SS

Butt Doors
2SRB30SS
2SRB33SS
2SRB36SS
2SRB39SS
2SRB42SS

Fixed Mullion
SRB30SS
SRB33SS
SRB36SS
SRB39SS
SRB42SS
SRB45SS
SRB48SS

DESIGN CONSIDERATIONS

34½" High - 24" Deep

- No shelf or drawer
- Fixed drawer header
- Full back
- Spice shelves are 3" deep. Inside capacity is 2¼".
- Spice shelves are adjustable up and down
- Two spice shelves per door
- Not available with roll out trays

HOW TO ORDER

- Specify **L** or **R** hinging on Single Door cabinet
- Pricing P-152

© Copyright StarMark Cabinetry MARCH 2021

Block 3060 Sink Front

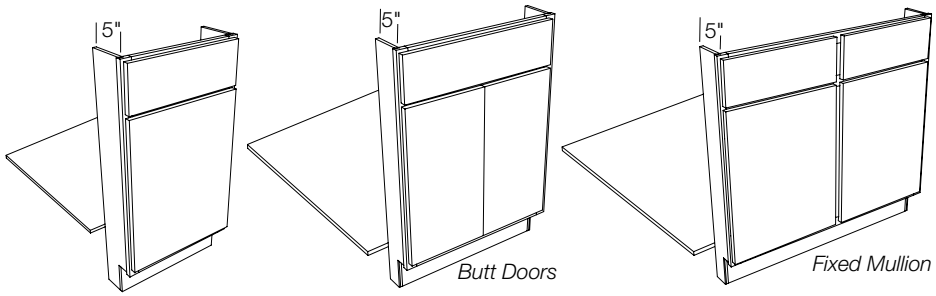

Single Door
SF18
SF21
SF24

Butt Doors
2SF24
2SF27
2SF30
2SF33
2SF36

Fixed Mullion
SF36

DESIGN CONSIDERATIONS

34½" High

- 5" side return
- Floor included

HOW TO ORDER

- Specify **L** or **R** hinging on Single Door cabinet
- Pricing P-153

Block 3080 Super Sink Base

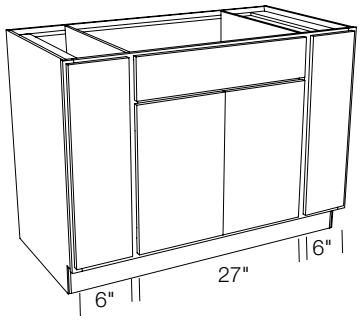

Butt Doors
2SSB48

DESIGN CONSIDERATIONS

34½" High - 24" Deep

- Fixed, full width drawer header
- No shelf or drawer
- Sink section equivalent to 30" wide SRB

HOW TO ORDER

- Includes slide out towel bar (not shown). Specify **Left** (STBKL) or **Right** (STBKR) and which opening: left, right or center.
- Pricing P-153

Block 3100 Recessed Corner Sink Base

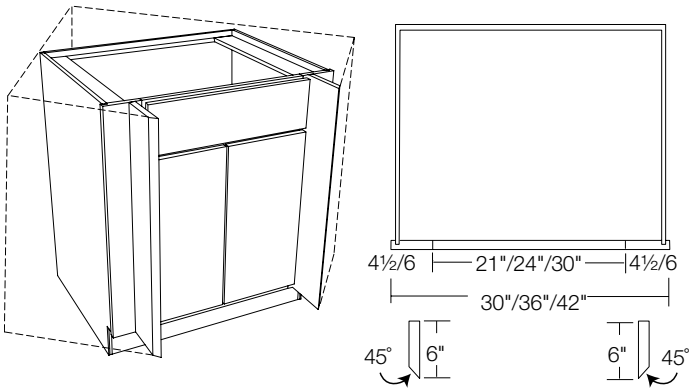

Butt Doors
2RCSB42
2RCSB45
2RCSB48

DESIGN CONSIDERATIONS

34½" High - 24" Deep

- No shelves or drawer
- 6" extensions sent loose
- Full width fixed drawer header
- Allow 42", 45" or 48" of wall space for installation

HOW TO ORDER

- Pricing P-153

Cabinet	Sink Area
2RCSB42	30"
2RCSB45	36"
2RCSB48	42"

INSTALLATION TIP

We recommend a 9" wide cabinet minimum between this cabinet and a dishwasher.

© Copyright StarMark Cabinetry MARCH 2021

Block 3110 Diagonal Corner Sink Base

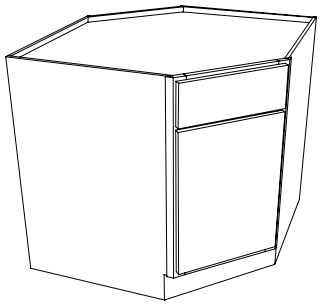

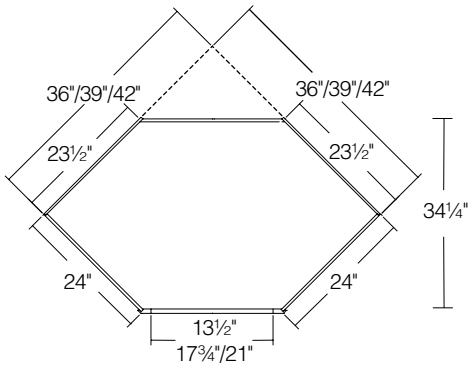

DCSB36
DCSB39
DCSB42

DESIGN CONSIDERATIONS

34½" High - 24" Deep

- No shelves or drawer
- 42" wide for use with double bowl sink
- Fixed drawer header
- Allow 36", 39" or 42" of wall space for installation

HOW TO ORDER

- Specify **L** or **R** hinging
- Pricing P-153

INSTALLATION TIP

We recommend a 9" wide cabinet minimum between this cabinet and a dishwasher.

Block 3120 Diagonal Corner Sink Front

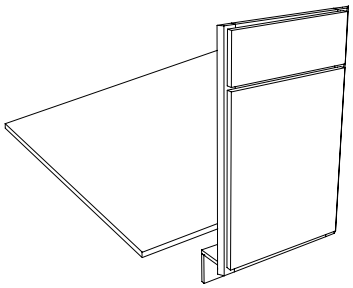

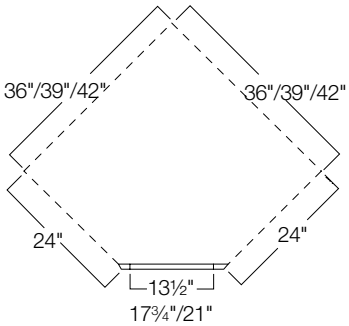

DSF36
DSF39
DSF42

DESIGN CONSIDERATIONS

34½" High

- Floor included
- 42" wide for use with double bowl sink
- Allow 36", 39" or 42" of wall space for installation

HOW TO ORDER

- Specify **L** or **R** hinging
- Pricing P-154

INSTALLATION TIP

We recommend a 9" wide cabinet minimum between this cabinet and a dishwasher.

Block 3140 Square Corner Sink Base

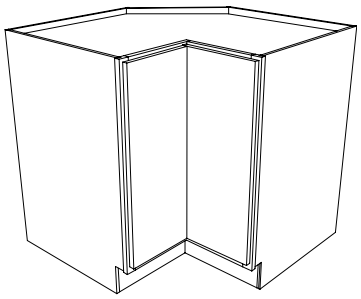

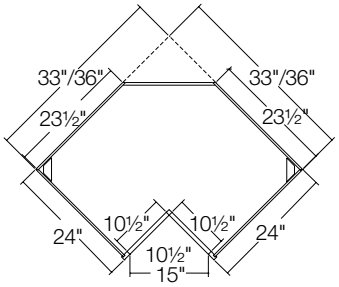

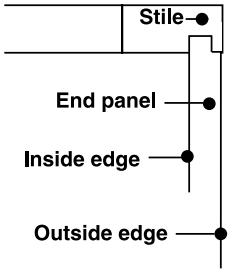

SBC33
SBC36

DESIGN CONSIDERATIONS

34½" High - 24" Deep

- No shelf
- If you are specifying the Arlington, Bell Gardens, Ellington, Glendale, Peabody, Prescott, Redcliff, Syracuse, Venice or Verona door style, please note that SBC33 will be built with a flat panel door.
- If you are specifying the Melbourne door style, please note that SBC33 will be built with 2¼" stiles to maintain the raised center panel.
- If you are specifying a Traditional overlay door style, note that the doors on the SBC33 will be built with 1⅞" stiles.
- Allow 33" or 36" of wall space for installation
- End panels are shifted to outside frame edge, eliminating ¼" reveal. End panels are not flush. See detail.
- Soft close hinges are not available on this cabinet.

HOW TO ORDER

- Specify **L** or **R** hinging
- Pricing P-154

INSTALLATION TIP

We recommend a 9" wide cabinet minimum between this cabinet and a dishwasher.

© Copyright StarMark Cabinetry MARCH 2021

BLIND CORNER BASES

For blocks
3150
3157
3158
3159
3160
3170

DESIGN CONSIDERATIONS

Size	Minimum pull Trad.	Minimum pull Modern
BC37	1″	2″
BC39	0″	1″
BC42	0″	1″
BC45	0″	1″
BC48	0″	1″

- **Maximum pull 3″.** Allow extra pull when using decorative hardware or placing adjacent to an appliance like a range or refrigerator.
- Void opening is 19½″ wide or 12″ wide (blocks 3157 and 3159)
- Refer to blocks 9430 and 9440 for panel or flush void application

HOW TO ORDER

- Specify void left (**VL**) or void right (**VR**)

Cabinet Size	Door Opening Width*
BC37	9″
BC39	10½″
BC42	13½″
BC45	16½″
BC48	19½″

- See Inset Specifications Section for Blind Corner face frame drawings.

Dimensions apply to block 3157

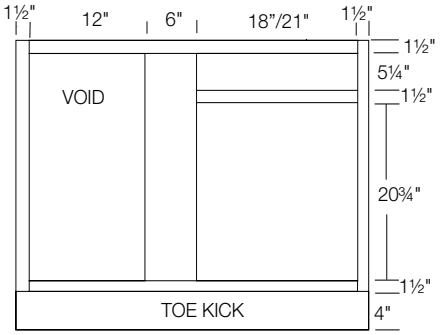

Dimensions apply to block 3150, 3158, 3160 and 3170

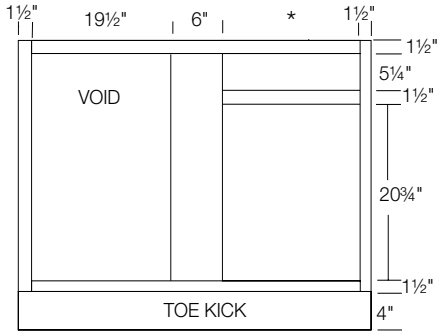

Dimensions apply to block 3159

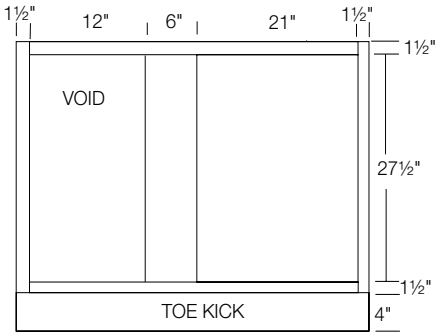

Block 3150 Blind Corner

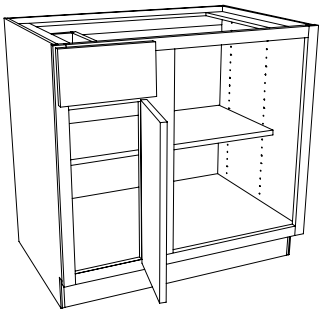

Illustration shows Void Right

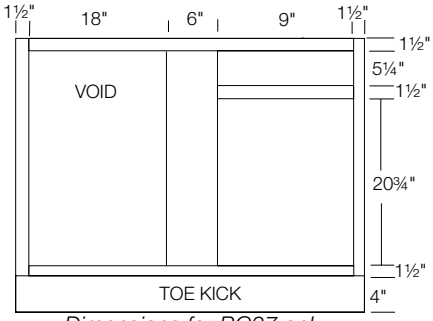

Dimensions for BC37 only

Void Left	Void Right
BC37VL	**BC37VR**
BC39VL	**BC39VR**
BC42VL	**BC42VR**
BC45VL	**BC45VR**
BC48VL	**BC48VR**

DESIGN CONSIDERATIONS

34½″ High - 24″ Deep

- 1 adjustable ⅔ depth shelf
- BC37 is 36″ wide and needs to be pulled to 37″ minimum, 42″ maximum.

HOW TO ORDER

- Door will be hinged on void side unless specified
- Pricing P-154

© Copyright StarMark Cabinetry MARCH 2021

BLIND CORNER BASES

For blocks
3150
3157
3158
3159
3160
3170

DESIGN CONSIDERATIONS

Size	Minimum pull Trad.	Minimum pull Modern
BC37	1″	2″
BC39	0″	1″
BC42	0″	1″
BC45	0″	1″
BC48	0″	1″

- **Maximum pull 3″.** Allow extra pull when using decorative hardware or placing adjacent to an appliance like a range or refrigerator.
- Void opening is 19½″ wide or 12″ wide (blocks 3157 and 3159)
- Refer to blocks 9430 and 9440 for panel or flush void application

HOW TO ORDER

- Specify void left (**VL**) or void right (**VR**)

Cabinet Size	Door Opening Width*
BC37	9″
BC39	10½″
BC42	13½″
BC45	16½″
BC48	19½″

- See Inset Specifications Section for Blind Corner face frame drawings.

Dimensions apply to block 3157

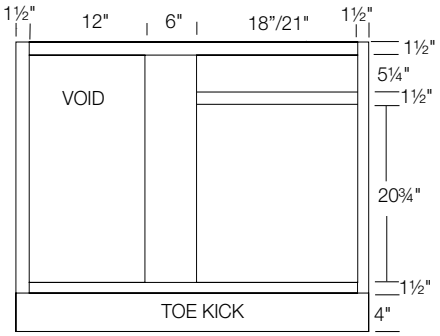

Dimensions apply to block 3150, 3158, 3160 and 3170

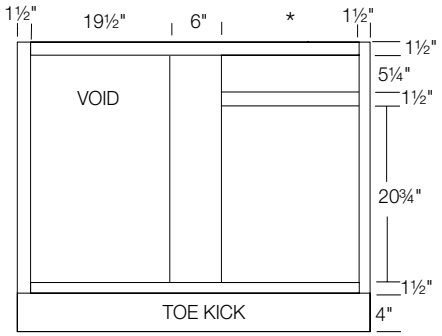

Dimensions apply to block 3159

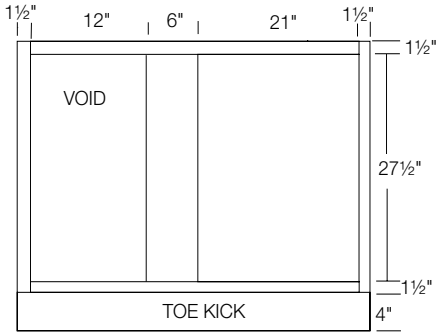

Block 3156 Blind Corner with Revolving Slide Out Wood Shelf

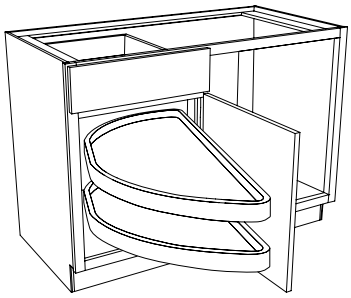

Illustration shows Void Right

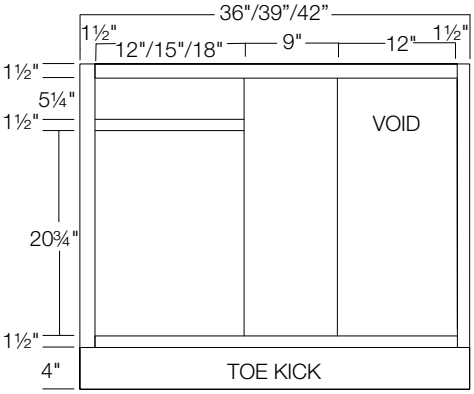

DESIGN CONSIDERATIONS

34½″ High - 24″ Deep

- Shelves are wood
- Two shelves swing and pull out of the opening individually
- No modifications allowed
- BCRSW42 cabinet is 36″ wide and is designed to pull to 42″, maximum pull 45″
- BCRSW45 cabinet is 39″ wide and is designed to pull to 45″, maximum pull 48″
- BCRSW48 cabinet is 42″ wide and is designed to pull to 48″, maximum pull 51″

HOW TO ORDER

- Door will be hinged on void side unless specified
- Pricing P-154

Void Left	Void Right
BCRSW42VL	**BCRSW42VR**
BCRSW45VL	**BCRSW45VR**
BCRSW48VL	**BCRSW48VR**

© Copyright StarMark Cabinetry MARCH 2021

Block 3157 Blind Corner with Swing-out Shelf

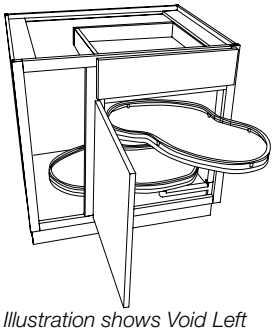

Illustration shows Void Left

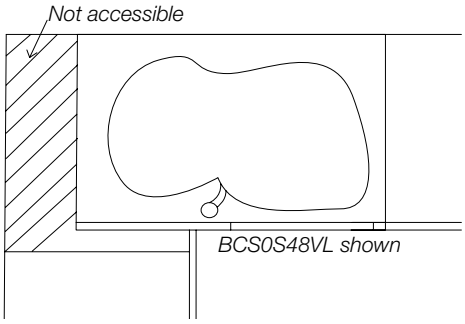

Void Left	Void Right
BCSOS48VL	**BCSOS48VR**
BCSOS51VL	**BCSOS51VR**

DESIGN CONSIDERATIONS

34½" High - 24" Deep

- Shelves are wood with chrome rails with a non-skid surface
- Shelves swing out through opening individually
- BCSOS48 cabinet is 39" wide and is designed to be pulled to 48", maximum pull 49¼"
- BCSOS51 cabinet is 42" wide and is designed to be pulled to 51", maximum pull 52¼"
- See S-205 for Inset face frame openings.
- Swing out shelves will not extend fully if cabinet is installed next to a deeper cabinet or appliance.
- There will be 9" of space in the corner that will not be accessible.
- No modifications available

HOW TO ORDER

- Door is hinged on void side.
- Pricing P-154

Block 3158 Blind Corner Pantry with Chrome/Wood Baskets

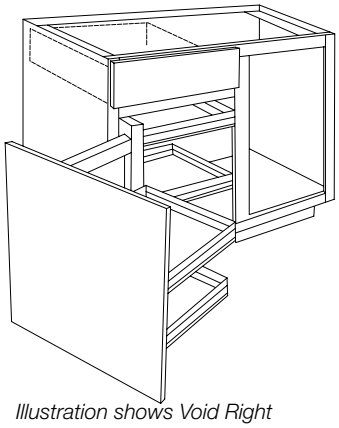

Illustration shows Void Right

Void Left	Void Right
BCPTY45VL	**BCPTY45VR**
BCPTY48VL	**BCPTY48VR**

DESIGN CONSIDERATIONS

34½" High - 24" Deep

- Baskets are wood with chrome rails and have a non-skid surface
- 45" cabinet has 2 adjustable 12" wide baskets on the door, and 2 adjustable 15" wide baskets in blind corner
- 48" cabinet has 2 adjustable 15" wide baskets on the door, and 2 adjustable 15" wide baskets in blind corner
- The baskets mounted on the door slide out when the door is opened, while the blind corner baskets roll into the door opening.
- BCPTY45 maximum pull is 47½"
- BCPTY48 maximum pull is 50½"
- You may not have full access if cabinet is installed next to a deeper cabinet or appliance.
- No modifications available

HOW TO ORDER

- Pricing P-155

Block 3159 Blind Corner with Magic Corner Shelves

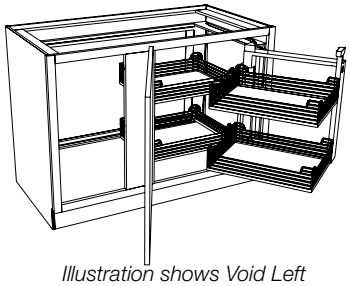

Illustration shows Void Left

Void Left	Void Right
BMC51VL	**BMC51VR**

DESIGN CONSIDERATIONS

34½" High - 24" Deep

- Shelves are wood with chrome rails and have a non-skid surface
- You may not have full access if cabinet is installed next to a deeper cabinet or appliance.
- Cabinet is 42" wide and is designed for spaces 49½" - 52"
- There will be some space in the corner that will not be accessible
- The unit has two adjustable shelves that pull out and moves the back shelves into the opening. The back shelves then slide out into the opening.
- No modifications available

HOW TO ORDER

- Door is hinged on void side.
- Pricing P-155

© Copyright StarMark Cabinetry MARCH 2021

Block 3160 Blind Corner with Roll Out Trays and Door Shelf

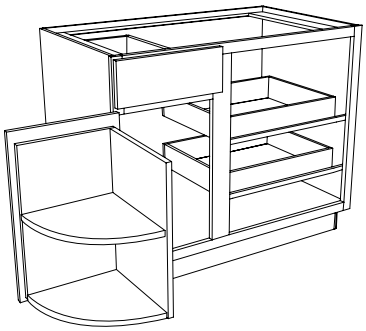

Illustration shows Void Right

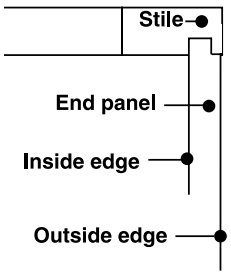

DESIGN CONSIDERATIONS

34½" High - 24" Deep

- Roll out trays roll sideways into door opening
- Wood door shelf kit
- Maximum pull is 3"
- Door must open 180 degrees
- **Door is hinged opposite void**
- You may not have full access if cabinet is installed next to a range or dishwasher
- End panels are shifted to outside frame edge, eliminating ¼" reveal. End panels are not flush. See detail.
- Not available with soft close

HOW TO ORDER

- Pricing P-155

Void Left	Void Right
BCDRT42VL	**BCDRT42VR**
BCDRT45VL	**BCDRT45VR**
BCDRT48VL	**BCDRT48VR**

Block 3162 Blind Corner with Revolving Slide Out Drawer Front

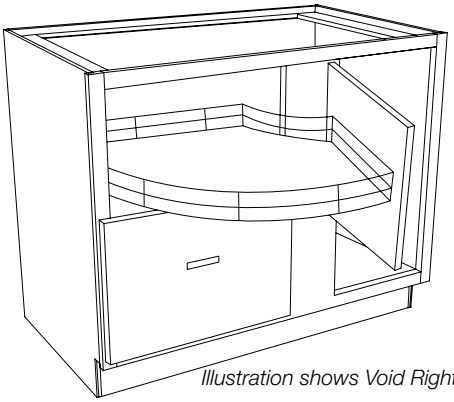

Illustration shows Void Right

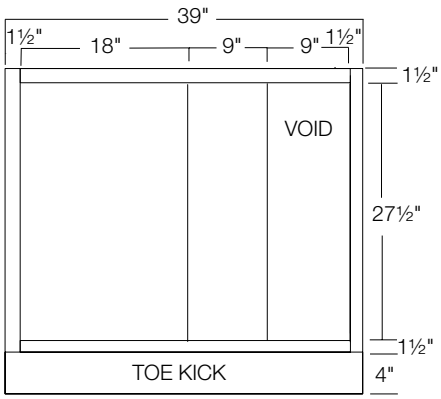

DESIGN CONSIDERATIONS

34½" High - 24" Deep

- Shelves are wood with chrome rails
- Individual shelves attached to drawer front
- There is no face frame rail between the drawer fronts
- Traditional overlay door styles will have a ¼" gap between drawer fronts
- Cabinet is 39" wide and needs to be pulled to 48" minimum, 51" maximum.

HOW TO ORDER

- Pricing P-155

Void Left	Void Right
BCRDF48VL	**BCRDF48VR**

Block 3170 Peninsula Blind Corner

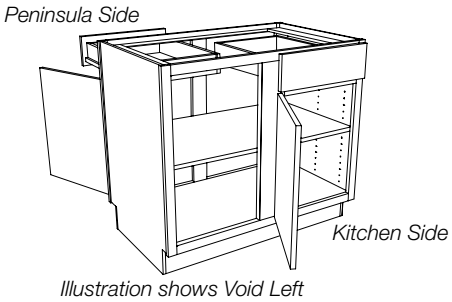

Illustration shows Void Left

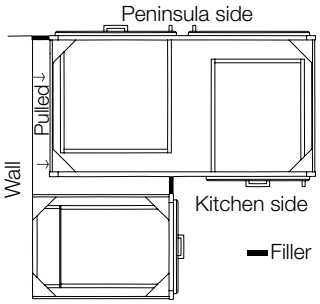

DESIGN CONSIDERATIONS

34½" High - 24" Deep

- 1 adjustable full depth shelf
- Maximum pull is 3"

HOW TO ORDER

- Door will be hinged on void side unless specified
- If pulled for clearance, must order extended stile or filler for peninsula side. See top view illustration.
- Pricing P-155

Void Left	Void Right
PBC39VL	**PBC39VR**
PBC42VL	**PBC42VR**
PBC45VL	**PBC45VR**
PBC48VL	**PBC48VR**

© Copyright StarMark Cabinetry MARCH 2021

Block 3200 Island Peninsula Corner Base

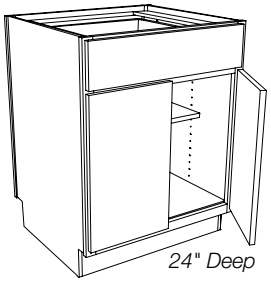

Butt Doors
2IPB27

DESIGN CONSIDERATIONS

34½" High - 24" Deep
- ⅔ depth shelf
- 1 full width drawer
- Cabinet has panel over back void
- Illustration shows peninsula side

HOW TO ORDER

- Pricing P-156

INSTALLATION TIP

- For use with peninsula bases
- 3¾" face frame on back eliminates need for filler

Block 3210 Island Peninsula Corner Base with Wide Bottom Rail and Full Shelf

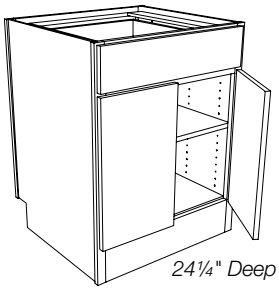

Butt Doors
2IPBW27FS

DESIGN CONSIDERATIONS

34½" High - 24¼" Deep
- 1 adjustable full depth shelf
- 5½" wide bottom rail
- Full height door option - specify **FHD** in special information
- 1 full width drawer
- Cabinet has panel over back void
- Illustration shows peninsula side

HOW TO ORDER

- Specify **FHD** if you want a full height door
- Pricing P-156

INSTALLATION TIP

- For use with standard bases and ¼" back panel
- 3¾" face frame on back eliminates need for filler
- If using an ADIP or FFD back panel, increase depth of cabinet to 24¾"

© Copyright StarMark Cabinetry MARCH 2021

LAZY SUSAN BASE/RECYCLE CENTER/SQUARE SUPER SUSAN/SQUARE BASE CORNER

For blocks
3220
3300
3301
3310
3320
3321
3323
3325
3330
3335

Dimensions apply to block 3220

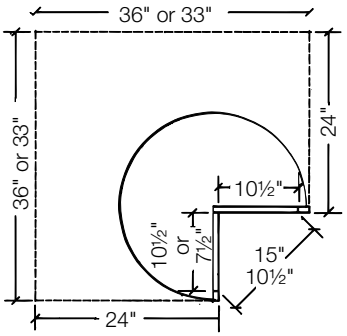

Dimensions apply to block 3300, 3310, 3320, 3323, 3325, 3330 and 3335

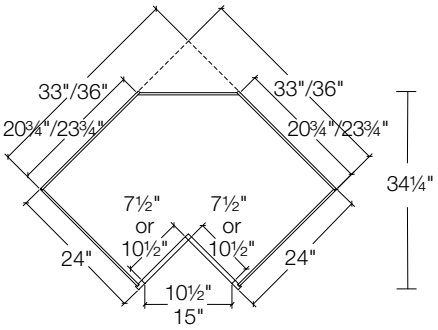

Block 3220 Lazy Susan Base

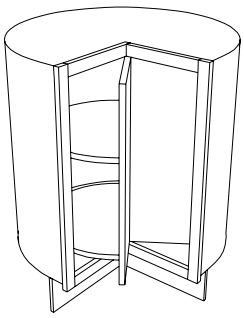

LSB33
LSB36

DESIGN CONSIDERATIONS

34½" High

- Doors attached to molded poly susan turntables
- 33" has 18" diameter susan turntables
- 36" has 28" diameter susan turntables
- Allow 33" or 36" of wall space for installation.
- If you are specifying the Arlington, Bell Gardens, Ellington, Glendale, Peabody, Prescott, Redcliff, Syracuse, Venice or Verona door style, please note that LSB33 will be built with a flat panel door.
- If you are specifying the Melbourne door style, please note that LSB33 will be built with 2¼" stiles to maintain the raised center panel.
- If you are specifying a Traditional overlay door style, note that the doors on the LSB33 will be built with 1⅞" stiles.
- Soft close hinges are not available on this cabinet.

HOW TO ORDER

- Pricing P-156

INSTALLATION TIP

We recommend BEP (block 11380) or LSBEP (block 11840) when placing this cabinet next to an appliance

Block 3300 Square Base Corner with Full Shelf

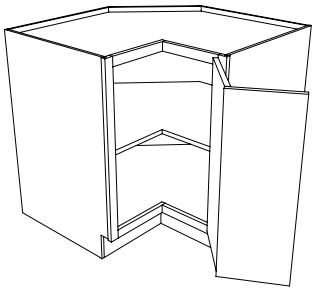

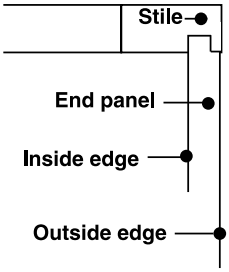

SBC33FS
SBC36FS

DESIGN CONSIDERATIONS

34½" High - 24" Deep

- 1 fixed full depth shelf
- Allow 33" or 36" of wall space for installation
- If you are specifying the Arlington, Bell Gardens, Ellington, Glendale, Peabody, Prescott, Redcliff, Syracuse, Venice or Verona door style, please note that SBC33 will be built with a flat panel door.
- If you are specifying the Melbourne door style, please note that SBC33 will be built with 2¼" stiles to maintain the raised center panel.
- If you are specifying a Traditional overlay door style, note that the doors on the SBC33FS will be built with 1⅞" stiles.
- End panels are shifted to outside frame edge, eliminating ¼" reveal. End panels are not flush. See detail.
- Soft close hinges are not available on this cabinet.

HOW TO ORDER

- Specify **L** or **R** hinging
- Pricing P-156

© Copyright StarMark Cabinetry MARCH 2021

Block 3301 Asymmetrical Base with Full Shelf

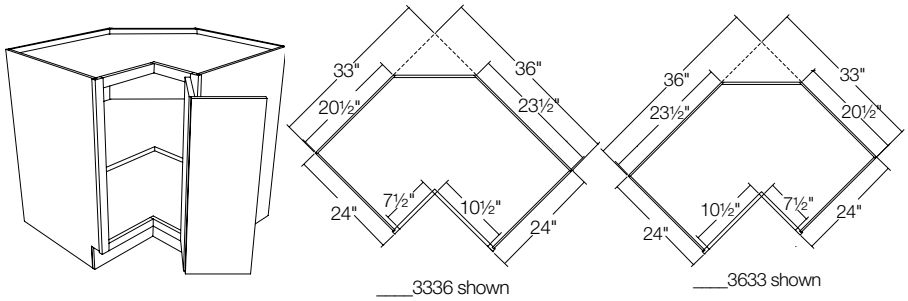

ASBC3336FS
ASBC3633FS

DESIGN CONSIDERATIONS

34½" High - 24" Deep

- 1 fixed full depth shelf
- Allow 33" or 36" of wall space for installation
- If you are specifying the Arlington, Bell Gardens, Ellington, Glendale, Peabody, Prescott, Redcliff, Syracuse, Venice or Verona door style, please note that ASBC__FS will be built with a flat panel door.
- If you are specifying the Melbourne door style, please note that ASBC__FS will be built with 2¼" stiles to maintain the raised center panel.
- If you are specifying a Traditional overlay door style, note that the smaller door will be built with 1⅞" stiles.
- Nomenclature reads left width, then right. ASBC3336FS is 33" wide on the left side and 36" wide on the right.
- End panels are shifted to outside frame edge, eliminating ¼" reveal. End panels are not flush. See detail.
- Soft close hinges are not available on this cabinet.

HOW TO ORDER

- Specify **L** or **R** hinging
- Pricing P-156

Block 3310 Square Super Susan

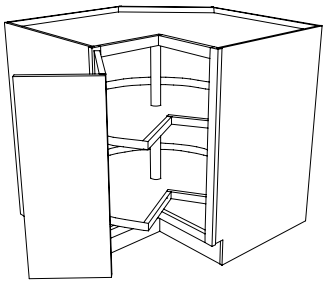

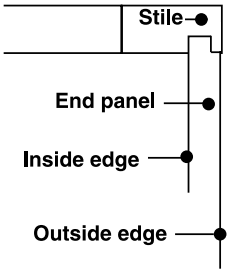

SSS36

DESIGN CONSIDERATIONS

34½" High - 24" Deep

- Two 32" diameter poly susan turntables
- Allow 36" of wall space for installation
- End panels are shifted to outside frame edge, eliminating ¼" reveal. End panels are not flush. See detail.
- Soft close hinges are not available on this cabinet.

HOW TO ORDER

- Specify **L** or **R** hinging
- Pricing P-156

Block 3320 Square Super Susan with Wood Turntables

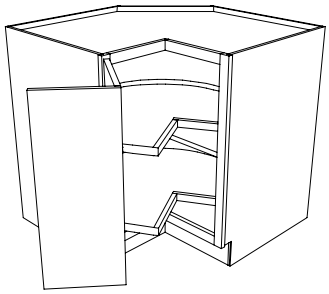

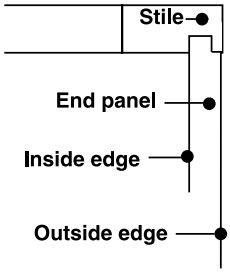

SSSW33
SSSW36

DESIGN CONSIDERATIONS

34½" High - 24" Deep

- Two 28" diameter wood turntables for the 33" cabinet
- Two 32" diameter wood turntables for the 36" cabinet
- Allow 33" or 36" of wall space for installation
- If you are specifying the Arlington, Bell Gardens, Ellington, Glendale, Peabody, Prescott, Redcliff, Syracuse, Venice or Verona door style, please note that SSSW33 will be built with a flat panel door.
- If you are specifying the Melbourne door style, please note that SSSW33 will be built with 2¼" stiles to maintain the raised center panel.
- If you are specifying a Traditional overlay door style, note that the doors on the SSSW33 will be built with 1⅞" stiles.
- Wood turntables have a plywood core with ¾" thick solid wood edging
- End panels are shifted to outside frame edge, eliminating ¼" reveal. End panels are not flush. See detail.
- Soft close hinges are not available on this cabinet.

HOW TO ORDER

- Specify **L** or **R** hinging
- Pricing P-157

© Copyright StarMark Cabinetry MARCH 2021

LAZY SUSAN BASE/RECYCLE CENTER/SQUARE SUPER SUSAN/SQUARE BASE CORNER

For blocks
3220
3300
3301
3310
3320
3321
3323
3325
3330
3335

Dimensions apply to block 3220

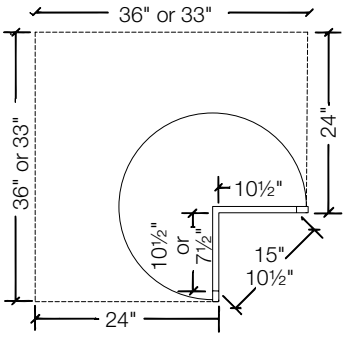

Dimensions apply to block 3300, 3310, 3320, 3323, 3325, 3330 and 3335

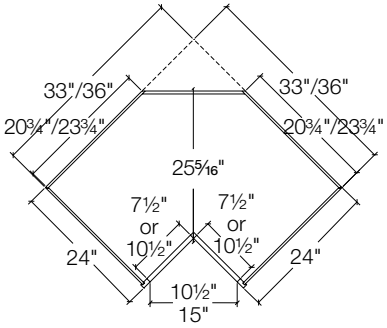

Top View for Blocks 3301, 3310, 3320 3321, 3323, 3325, and 3330

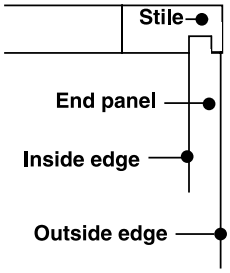

Block 3321 Asymmetrical Square Super Susan with Wood Turntables

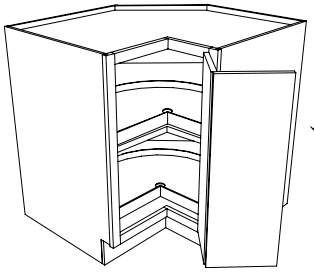

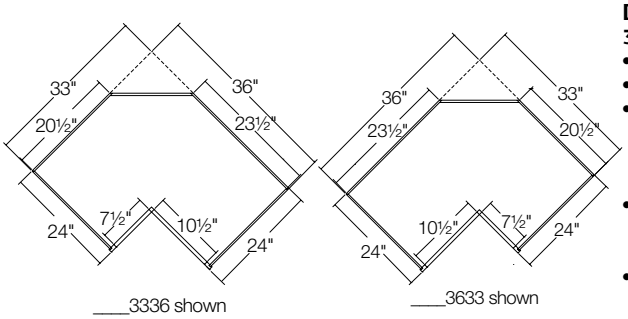

____3336 shown ____3633 shown

ASSSW3336
ASSSW3633

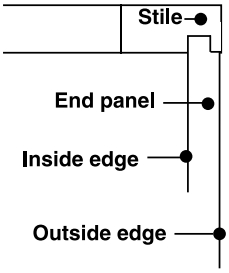

DESIGN CONSIDERATIONS

34½" High - 24" Deep

- Two 28" diameter wood turntables, offset to one side
- Allow 33" or 36" of wall space for installation
- If you are specifying the Arlington, Bell Gardens, Ellington, Glendale, Peabody, Prescott, Redcliff, Syracuse, Venice or Verona door style, please note that ASSSW will be built with a flat panel door.
- If you are specifying the Melbourne door style, please note that ASSSW will be built with 2¼" stiles to maintain the raised center panel.
- If you are specifying a Traditional overlay door style, note that the smaller door will be built with 1⅞" stiles.
- Wood turntables have a plywood core with ½" thick edging
- Nomenclature reads left width, then right. ASSSW3336 is 33" wide on left side and 36" wide on the right.
- End panels are shifted to outside frame edge, eliminating ¼" reveal. End panels are not flush. See detail.
- Soft close hinges are not available on this cabinet.

HOW TO ORDER

- Specify **L** or **R** hinging
- Pricing P-157

Block 3323 Square Super Susan with Chrome/Wood Turntables

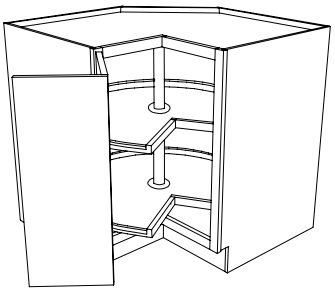

SSSCW36

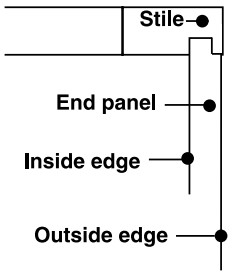

DESIGN CONSIDERATIONS

34½" High - 24" Deep

- Two 32" wood turntables have chrome railings and a non-skid surface
- Allow 36" of wall space for installation
- End panels are shifted to outside frame edge, eliminating ¼" reveal. End panels are not flush. See detail.
- Soft close hinges are not available on this cabinet.

HOW TO ORDER

- Specify **L** or **R** hinging
- Pricing P-157

NOTES/CAUTION

- Inset concealed hinges not available.

© Copyright StarMark Cabinetry MARCH 2021

Block 3325 Square Lazy Susan Base

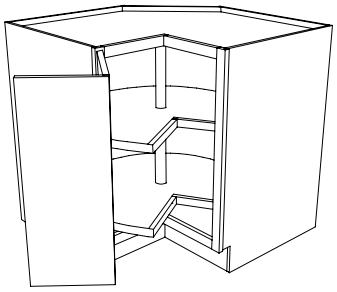

SLSB33

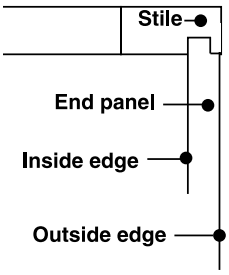

DESIGN CONSIDERATIONS

34½" High - 24" Deep

- Two 24" diameter poly susan turntables
- Allow 33" of wall space for installation
- If you are specifying the Arlington, Bell Gardens, Ellington, Glendale, Peabody, Prescott, Redcliff, Syracuse, Venice or Verona door style, please note that this cabinet will be built with a flat panel door.
- If you are specifying the Melbourne door style, please note that SLSB33will be built with 2¼" stiles to maintain the raised center panel.
- If you are specifying a Traditional overlay door style, note that the doors on the SLSB33 will be built with 1⅞" stiles.
- End panels are shifted to outside frame edge, eliminating ¼" reveal. End panels are not flush. See detail.
- Soft close hinges are not available on this cabinet.

HOW TO ORDER

- Specify **L** or **R** hinging
- Pricing P-157

Block 3335 Square Base Corner with Revolving Slide Shelf

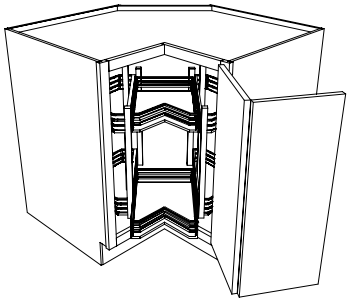

SBC36RSS

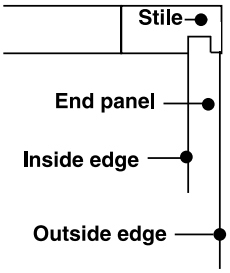

DESIGN CONSIDERATIONS

34½" High - 24" Deep

- Two wood/chrome shelves pull out for easy access
- Unit rotates side to side to access 4 adjustable side mount baskets
- Allow 36" of wall space for installation
- No modifications allowed
- End panels are shifted to outside frame edge, eliminating ¼" reveal. End panels are not flush. See detail.
- Soft close hinges are not available on this cabinet.

HOW TO ORDER

- Specify **L** or **R** hinging
- Pricing P-157

NOTES/CAUTION

- Inset concealed hinges not available.

Block 3337 Square Base Corner with Drawers

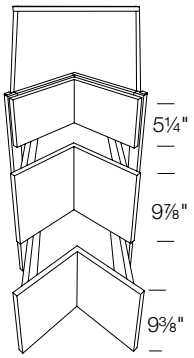

SBC33DRW3
SBC36DRW3
SBC39DRW3
SBC42DRW3

DESIGN CONSIDERATIONS

34½" High

- Drawers are 27" deep
- Allow 33", 36", 39" or 42" of wall space for installation
- Drawer reveal on all overlay door styles is ¾"
- No modifications allowed
- Designed for a 24" deep installation
- Do not install next to an appliance or an increased depth cabinet
- No end panel modifications available, including Finished Ends.

HOW TO ORDER

- Pricing P-157

Cabinet Width	Drawer Width
33"	10⅛"
36"	14⅜"
39"	18⅝"
42"	22⅞"

© Copyright StarMark Cabinetry MARCH 2021

Block 3340 Diagonal Corner with Full Shelf

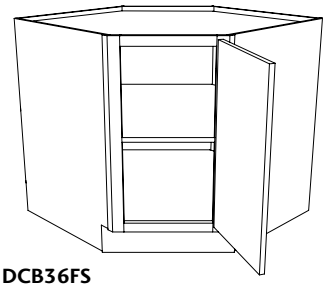

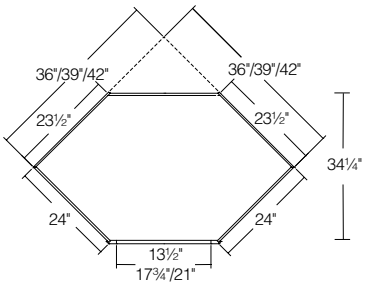

DCB36FS
DCB39FS
DCB42FS

DESIGN CONSIDERATIONS

34½" High - 24" Deep
- Full height door
- 1 fixed full depth shelf
- Allow 36", 39" or 42" of wall space for installation

HOW TO ORDER

- Specify **L** or **R** hinging
- Pricing P-158

Block 3345 Diagonal Corner Lazy Susan

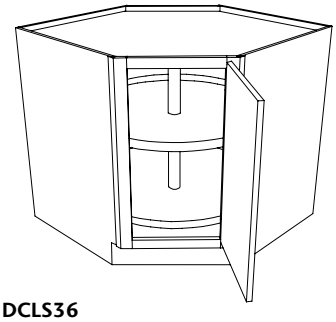

DCLS36

DESIGN CONSIDERATIONS

34½" High - 24" Deep
- Full height door
- Two 28" diameter poly susan turntables
- Allow 36" of wall space for installation

HOW TO ORDER

- Specify **L** or **R** hinging
- Pricing P-158

Block 3346 Diagonal Corner Lazy Susan with Wood Trays

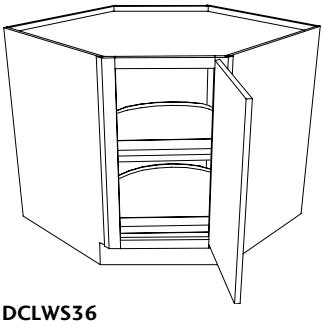

DCLWS36

DESIGN CONSIDERATIONS

34½" High - 24" Deep
- Full height door
- One 31" "D" shaped wood turntable on fixed shelf and one on floor of cabinet.
- Allow 36" of wall space for installation

HOW TO ORDER

- Specify **L** or **R** hinging
- Pricing P-158

Block 3347 Diagonal Lazy Susan with Chrome/Wood Turntables

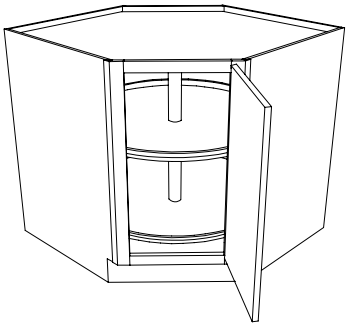

DCLSCW36

DESIGN CONSIDERATIONS

34½" High - 24" Deep
- Full height door
- Two 29" round wood turntables have chrome railings and a non-skid surface
- Allow 36" of wall space for installation

HOW TO ORDER

- Specify **L** or **R** hinging
- Pricing P-158

NOTES/CAUTION

- Inset concealed hinges not available.

© Copyright StarMark Cabinetry MARCH 2021

Block 3360* Curved In Base with Full Shelf

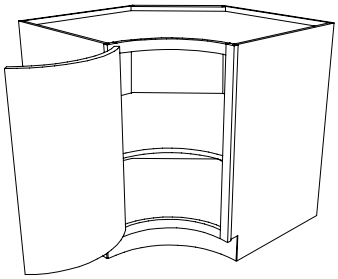

CIB36FS

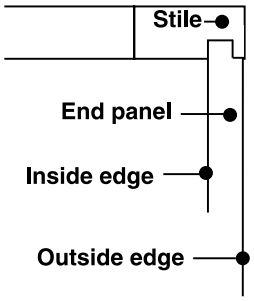

DESIGN CONSIDERATIONS

34½" High - 12" Radius

- 1 fixed full depth shelf
- No modifications allowed
- End panels are shifted to outside frame edge, eliminating ¼" reveal. End panels are not flush. See detail.
- Curved toe kick. See block 12200 for CTBT.

HOW TO ORDER

- Specify **L** or **R** hinging
- Must order and field apply ⅛" toe trim. See block 12200.
- Available in Accord, Aero, Alite, Breckenridge, Georgetown, Monroe, Tempo and Tudor
- Not available in Alder or Rustic Alder
- Pricing P-158

* On Select Door Styles Only

Block 3370* Curved In Base with Lazy Susan

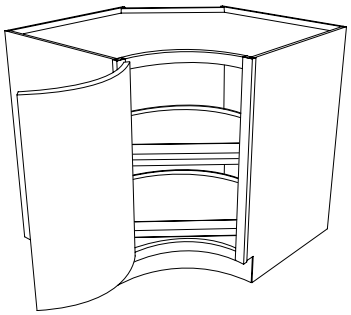

CIBLS36

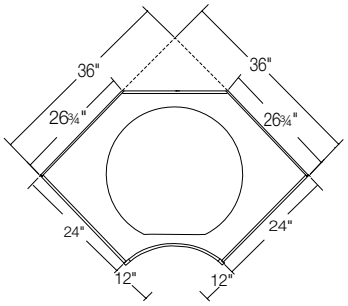

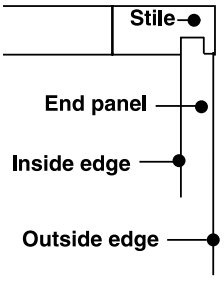

DESIGN CONSIDERATIONS

12" Radius

- One 31" "D" shaped wood turntable on fixed shelf and one on floor of cabinet.
- No modifications allowed
- End panels are shifted to outside frame edge, eliminating ¼" reveal. End panels are not flush. See detail.
- Curved toe kick. See block 12200 for CTBT.

HOW TO ORDER

- Specify **L** or **R** hinging
- Must order and field apply ⅛" toe trim. See block 12200.
- Available in Accord, Aero, Alite, Breckenridge, Georgetown, Monroe, Tempo and Tudor
- Not available in Alder or Rustic Alder
- Pricing P-159

* On Select Door Styles Only

Block 3380 Base One Drawer

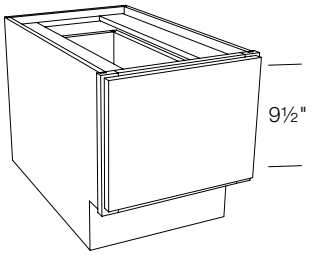

B1D12
B1D135
B1D15
B1D165
B1D18
B1D195
B1D21
B1D225
B1D24
B1D27
B1D30
B1D33
B1D36
B1D39
B1D42

DESIGN CONSIDERATIONS

16½" High - 24" Deep

- Toe kick will align with other base cabinets
- Deep drawer storage

HOW TO ORDER

- B1D135, B1D165, B1D195, and B1D225 are half sizes. For example B1D135 is 13½" wide.
- Pricing P-159

© Copyright StarMark Cabinetry MARCH 2021

Block 3390 Two Drawer Base

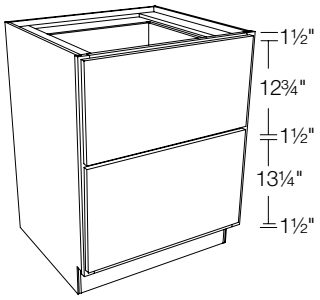

2DB12
2DB135
2DB15
2DB165
2DB18
2DB195
2DB21
2DB225
2DB24
2DB27
2DB30
2DB33
2DB36
2DB39
2DB42

DESIGN CONSIDERATIONS

34½" High - 24" Deep

- Use this cabinet for storing cookware sets in deep drawers.

HOW TO ORDER

- 2DB135, 2DB165, 2DB195, and 2DB225 are half sizes. For example 2DB135 is 13½" wide.
- Pricing P-159

Block 3391 Two Drawer Base with Roll Out Tray

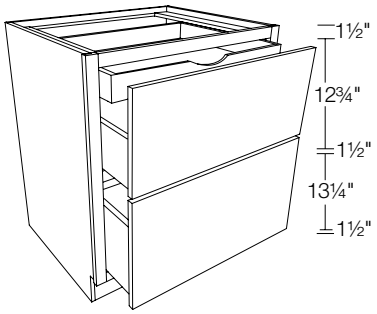

2DB12RT
2DB135RT
2DB15RT
2DB165RT
2DB18RT
2DB195RT
2DB21RT
2DB225RT
2DB24RT
2DB27RT
2DB30RT
2DB33RT
2DB36RT
2DB39RT
2DB42RT

DESIGN CONSIDERATIONS

34½" High - 24" Deep

- Use this cabinet for storing cookware sets in deep drawers.
- Roll tray allows small items to stay visible and accessible
- Slide roll tray back to view contents of drawer
- Bottom drawer works well for storing cookware sets
- Top drawer has 6¼" storage height below roll tray.

HOW TO ORDER

- 2DB135RT, 2DB165RT, 2DB195RT, and 2DB225RT are half sizes. For example 2DB135RT is 13½" wide.
- Pricing P-160

Block 3392 Two Drawer Base with Vegetable Drawer

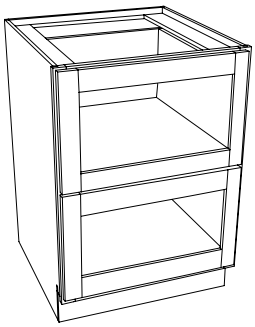

2DB15VG
2DB18VG
2DB21VG
2DB24VG
2DB27VG
2DB30VG

DESIGN CONSIDERATIONS

34½" High - 24" Deep

- Drawer front has five-piece construction with mortise and tenon detail. This construction does not match mitered door styles.
- Drawer partitions are shipped loose

HOW TO ORDER

- Inserts are sold separately. See blocks 9590-9645
- Pricing P-160

© Copyright StarMark Cabinetry MARCH 2021

Block 3393 Double Wide Drawer Base for Window Seat

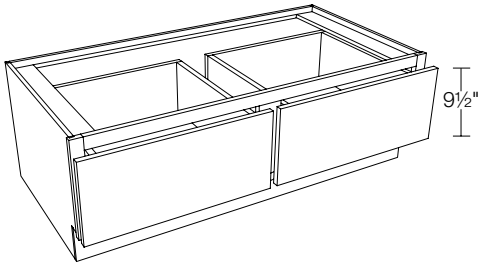

2DB48
2DB51
2DB54
2DB57
2DB60
2DB63
2DB66
2DB69
2DB72

DESIGN CONSIDERATIONS
16½" High - 24" Deep

HOW TO ORDER
- Pricing P-160

Block 3400 Three Drawer Base

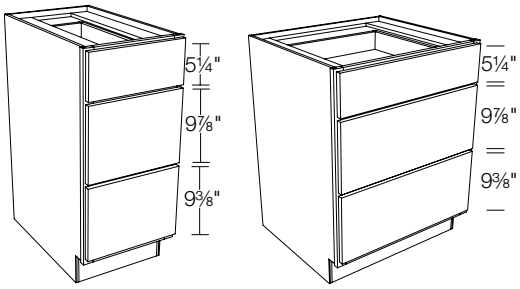

3DB12
3DB135
3DB15
3DB165
3DB18
3DB195
3DB21
3DB225
3DB24
3DB27
3DB30
3DB33
3DB36
3DB39
3DB42

DESIGN CONSIDERATIONS
34½" High - 24" Deep

HOW TO ORDER
- 3DB135, 3DB165, 3DB195, and 3DB225 are half sizes. For example 3DB135 is 13½" wide.
- Pricing P-161

Block 3410 Three Drawer Base with Bread Board

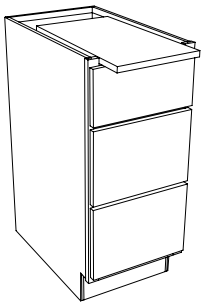

3DB12BB
3DB15BB
3DB18BB
3DB21BB
3DB24BB

DESIGN CONSIDERATIONS
34½" High - 24" Deep
- Top drawer opening aligns with 5¼" high openings.
- Bread board does not align with header width on Traditional or Modern overlay cabinets

HOW TO ORDER
- Pricing P-161

© Copyright StarMark Cabinetry MARCH 2021

Block 3418 Three Drawer Base with Partitions and Cutlery Divider

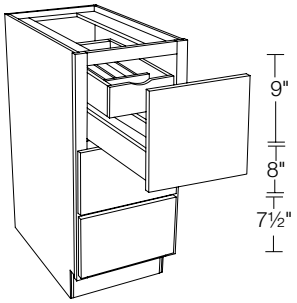

3DB15DPCD
3DB18DPCD
3DB21DPCD
3DB24DPCD

DESIGN CONSIDERATIONS

34½" High - 24" Deep

- Top drawer opens to reveal roll out tray with cutlery divider (CWR)
- Top drawer includes partitions that run the depth of the drawer. See chart.
- Slide roll tray back to view contents of drawer

HOW TO ORDER

- Pricing P-161

Cabinet width	Number of partitions
15"	1
18"	2
21"	3
24"	4

Block 3420 Three Drawer Base with Chopping Block

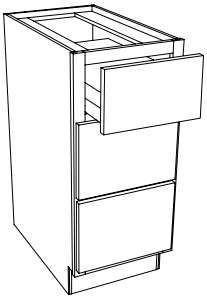

3DB15CB
3DB18CB
3DB21CB
3DB24CB

DESIGN CONSIDERATIONS

34½" High - 24" Deep

- Top drawer pulls open to access wood chopping block
- Drawer sides are reduced to accommodate chopping block.
- Chopping block is removable and is shipped separately

HOW TO ORDER

- Pricing P-162

Block 3421 Three Drawer Base with Warming Drawer

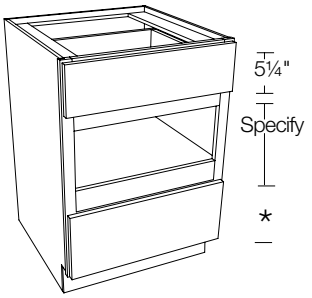

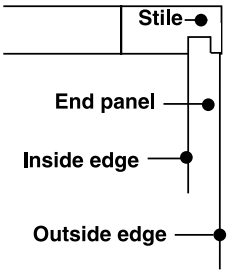

3DBWAR24
3DBWAR27
3DBWAR30
3DBWAR33
3DBWAR36
3DBWAR39
3DBWAR42

DESIGN CONSIDERATIONS

34½" High - 24" Deep

- End panels are shifted to outside frame edge, eliminating ¼" reveal. End panels are not flush. See detail.
- Floor below warming drawer opening

HOW TO ORDER

✪ To order this item, you must fill out and send an Appliance Template with the order.

- Pricing P-162

© Copyright StarMark Cabinetry MARCH 2021

Block 3422 Three Deep Drawer Base

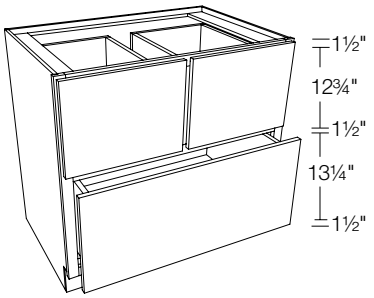

3DDB24
3DDB27
3DDB30
3DDB33
3DDB36
3DDB39
3DDB42

DESIGN CONSIDERATIONS

34½" High - 24" Deep

- Top drawer opening is 12¾" high.
- Deep drawer storage

HOW TO ORDER

- Pricing P-162

Block 3423 Four Deep Drawer Base

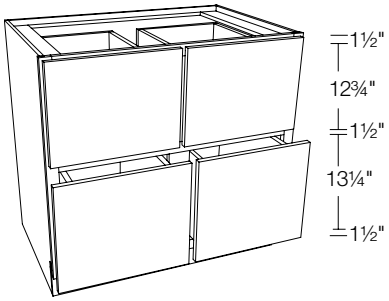

4DDB24
4DDB27
4DDB30
4DDB33
4DDB36
4DDB39
4DDB42

DESIGN CONSIDERATIONS

34½" High - 24" Deep

- Top drawer opening is 12¾" high.
- Deep drawer storage

HOW TO ORDER

- Pricing P-162

Block 3430 Drawer Base

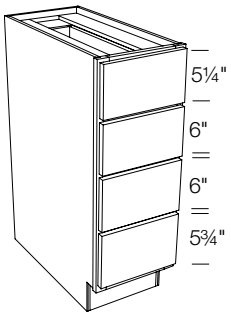

DB12
DB135
DB15
DB165
DB18
DB195
DB21
DB225
DB24
DB27

DESIGN CONSIDERATIONS

34½" High - 24" Deep

HOW TO ORDER

- DB135, DB165, DB195, and DB225 are half sizes. For example DB135 is 13½" wide.
- Pricing P-163

© Copyright StarMark Cabinetry MARCH 2021

Block 3435 Drawer Base

I

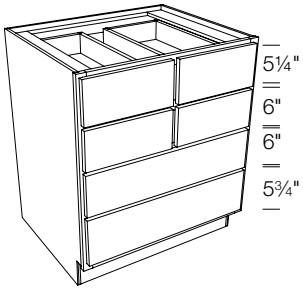

DB30
DB33
DB36
DB39
DB42

DESIGN CONSIDERATIONS

34½" High - 24" Deep

HOW TO ORDER

- Pricing P-163

Block 3440 Drawer Base with Bread Board

I

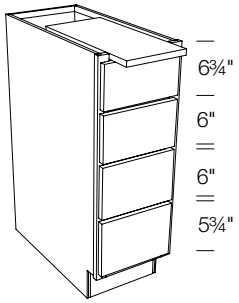

DB12BB
DB15BB
DB18BB
DB21BB
DB24BB

DESIGN CONSIDERATIONS

34½" High - 24" Deep

- Bread board does not align with header width on Traditional or Modern overlay cabinets.

HOW TO ORDER

- Pricing P-163

Block 3442 Drawer Base with Bread Liner in Top

I

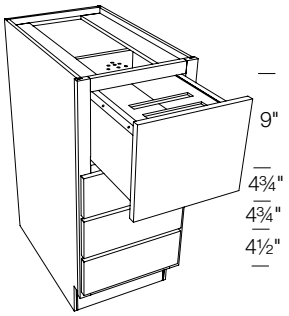

DBIF15BL
DBIF18BL
DBIF21BL
DBIF24BL

DESIGN CONSIDERATIONS

34½" High - 24" Deep

- Top drawer opening is 9" high
- The top drawer on this cabinet will not align with drawers on adjacent cabinets.
- Translucent polymer bread liner in top drawer.

HOW TO ORDER

- Pricing P-163

© Copyright StarMark Cabinetry MARCH 2021

Block 3450 Drawer Base with Chopping Block

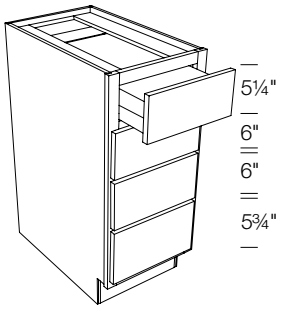

DB15CB
DB18CB
DB21CB
DB24CB

DESIGN CONSIDERATIONS

34½" High - 24" Deep

- Top drawer pulls open to access wood chopping block
- Drawer sides are reduced to accommodate chopping block
- Chopping block is removable and is shipped separately

HOW TO ORDER

- Pricing P-164

Block 3462 Five Drawer Base

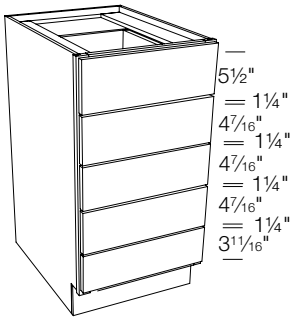

5DB12
5DB135
5DB15
5DB165
5DB18
5DB195
5DB21
5DB225
5DB24
5DB27
5DB30
5DB33
5DB36
5DB39
5DB42

DESIGN CONSIDERATIONS

34½" High - 24" Deep

- For shallow storage needs
- Top drawer header is 7¼" high to align with other Modern headers.
- Bottom four drawer headers are 5 7/16" high in all overlays with ¼" reveal in between all drawer headers.

HOW TO ORDER

- 5DB135, 5DB165, 5DB195, and 5DB225 are half sizes. For example 5DB135 is 13½" wide.
- Pricing P-164

Block 3464 Base Tall Three Drawer

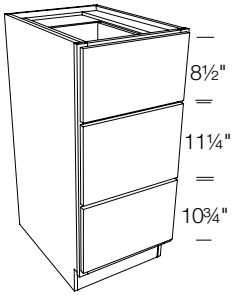

BT3D12
BT3D135
BT3D15
BT3D165
BT3D18
BT3D195
BT3D21
BT3D225
BT3D24
BT3D27
BT3D30
BT3D33
BT3D36

DESIGN CONSIDERATIONS

40½" High - 24" Deep

HOW TO ORDER

- BT3D135, BT3D165, BT3D195, and BT3D225 are half sizes. For example BT3D135 is 13½" wide.
- Pricing P-164

© Copyright StarMark Cabinetry MARCH 2021

Block 3465 Base Tall Four Drawer

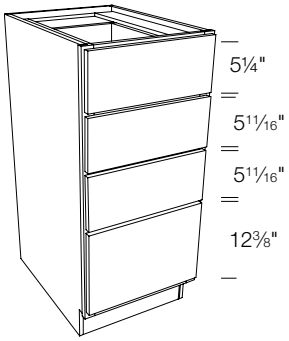

DESIGN CONSIDERATIONS
40½" High - 24" Deep

HOW TO ORDER
- BT4D135, BT4D165, BT4D195, and BT4D225 are half sizes. For example BT4D135 is 13½" wide.
- Pricing P-165

BT4D12
BT4D135
BT4D15
BT4D165
BT4D18
BT4D195
BT4D21
BT4D225
BT4D24
BT4D27
BT4D30
BT4D33
BT4D36

Block 3466 Base Tall Five Drawer

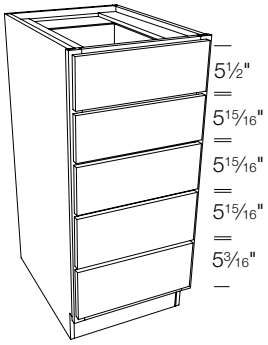

DESIGN CONSIDERATIONS
40½" High - 24" Deep

HOW TO ORDER
- BT5D135, BT5D165, BT5D195, and BT5D225 are half sizes. For example BT5D135 is 13½" wide.
- Pricing P-165

BT5D12
BT5D135
BT5D15
BT5D165
BT5D18
BT5D195
BT5D21
BT5D225
BT5D24
BT5D27
BT5D30
BT5D33
BT5D36

Block 3800 Base with Bread Board

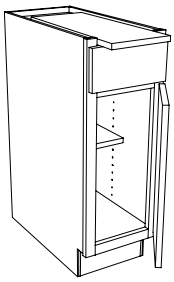

Single Door
B12BB
B15BB
B18BB
B21BB
B24BB

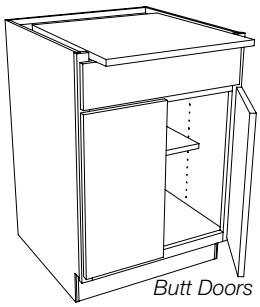

Butt Doors
2B24BB

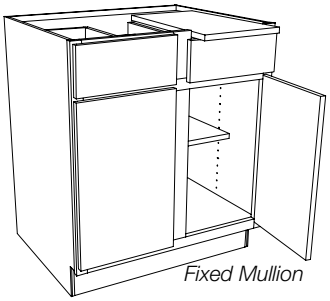

Fixed Mullion
B30BB
B36BB

DESIGN CONSIDERATIONS
34½" High - 24" Deep
- 1 adjustable ⅔ depth shelf
- Bread board does not align with header width on Traditional or Modern overlay cabinets

HOW TO ORDER
- Specify **L** or **R** hinging on Single Door cabinet
- Must specify bread board left (**BBL**) or bread board right (**BBR**) on fixed mullion cabinets.
- Pricing P-166

© Copyright StarMark Cabinetry MARCH 2021

Block 3820 Base with Chopping Block

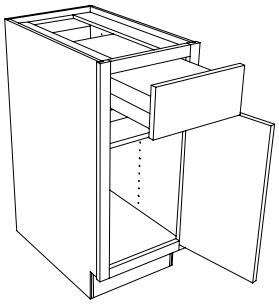

B15CB
B18CB
B21CB
B24CB

DESIGN CONSIDERATIONS

34½" High - 24" Deep

- 1 adjustable ⅔ depth shelf
- Top drawer pulls open to access wood chopping block
- Chopping block is removable and is shipped separately
- Drawer sides are reduced to accommodate chopping block

HOW TO ORDER

- Specify **L** or **R** hinging
- Pricing P-166

Block 3970 Base Pantry

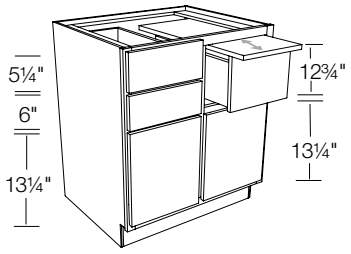

BPT30
BPT36
BPT42

DESIGN CONSIDERATIONS

34½" High - 24" Deep

- Includes a cutlery divider (which will fit into either shallow drawer), and a polymer bread liner in the deep drawer.
- Bread board does not align with header width on Traditional or Modern overlay cabinets

HOW TO ORDER

- Bread board is on the right unless your order specifies left
- Pricing P-166

Block 3980 Base Canned Good Storage

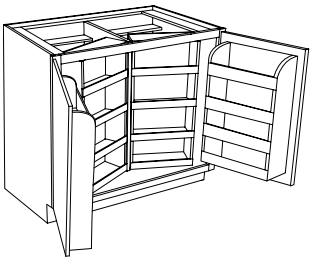

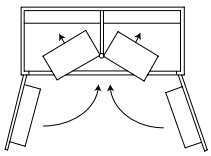

2BCS36

DESIGN CONSIDERATIONS

34½" High - 24" Deep

- All wood storage racks
- Two door racks
- 4 fixed shelves (½" thick, 5" deep) in the back of cabinet
- Two swinging shelf racks in center of cabinet
- Proper operation of pantry requires 106 degree door swing
- Dimensional modifications not available

HOW TO ORDER

- Pricing P-166

INSTALLATION TIP

If placed next to wall use FB3 or extended stile of 3" for proper function. May need to allow more than 3" if using decorative hardware

NOTES/CAUTION

- Inset concealed hinges not available.

© Copyright StarMark Cabinetry MARCH 2021

Block 3985 Base with Pullouts and Roll Trays

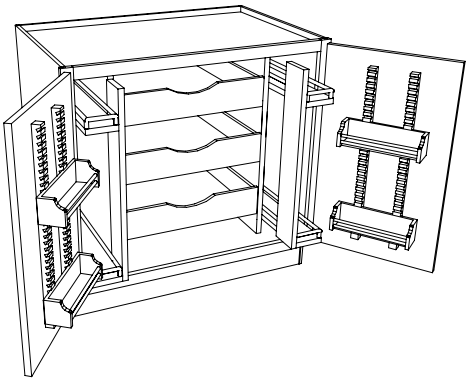

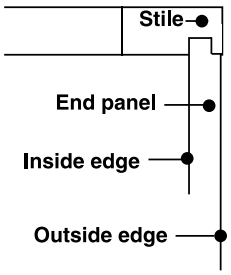

Butt Doors
2BSP36

DESIGN CONSIDERATIONS

34½" High - 24" Deep

- Three adjustable roll out trays
- Two units with 2 adjustable wood baskets (4 total) with chrome railings and a non-skid surface
- End panels are shifted to outside frame edge, eliminating ¼" reveal. End panels are not flush. See detail.
- Two spice racks per door (4 total)
- Spice racks are 3" deep. Inside capacity is 2¼"
- Spice racks are adjustable up and down
- Partition and roll tray area are 21" deep
- Dimensional modifications not available
- You may not have full access if cabinet is installed next to a range, dishwasher or wall.
- 165° hinges are standard with this cabinet
- Soft close hinges are not available on this cabinet.

HOW TO ORDER

- Pricing P-167

NOTES/CAUTION

- Inset concealed hinges not available.

Block 3990 Base with Mini Pantry

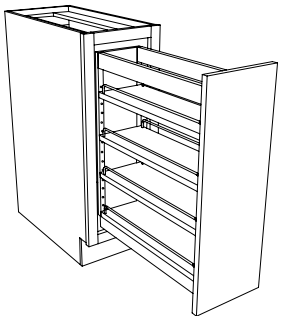

BFP09
BFP12
BFP15
BFP18

DESIGN CONSIDERATIONS

34½" High - 24" Deep

- Pull out pantry attached to door
- Wood pantry with chrome railing with one fixed shelf and three adjustable shelves
- Dimensional modifications not available

HOW TO ORDER

- See block 10150 for optional spice rack for top of pantry
- Pricing P-167

NOTES/CAUTION

- 9" wide cabinets not available in inset.

Block 3991 Pull Out Pantry with Soft Close

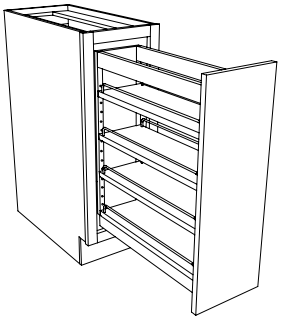

BFPSC09
BFPSC12
BFPSC15

DESIGN CONSIDERATIONS

34½" High - 24" Deep

- Pull out pantry attached to door
- Wood pantry with chrome railing with one fixed shelf and three adjustable shelves
- Dimensional modifications not available
- Includes soft close

HOW TO ORDER

- See block 10150 for optional spice rack for top of pantry.
- Pricing P-167

NOTES/CAUTION

- 9" wide cabinets not available in Inset

© Copyright StarMark Cabinetry MARCH 2021

Block 3992 Base Full Height Pantry with Motion Drive Opening

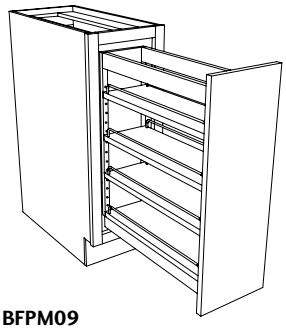

BFPM09
BFPM12

DESIGN CONSIDERATIONS

34½" High - 24" Deep

- Pull out pantry attached to door
- Touch the cabinet door to activate the motion drive
- Outlet needs to be installed near unit, not directly behind
- Wood pantry with chrome railing with one fixed shelf and three adjustable shelves
- Dimensional modifications not available

HOW TO ORDER

- See block 10150 for optional spice rack for top of pantry.
- Pricing P-167

INSTALLATION TIP

- Partial wiring needs to be completed on job site.
- Installer will need to drill access hole in rear of cabinet for wiring.

Block 3993 Base Pull Out Knife Block and Utensil Storage

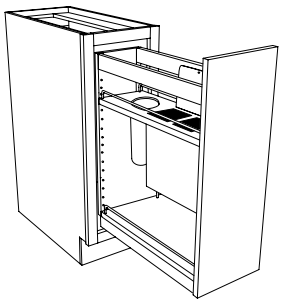

BPKBU12

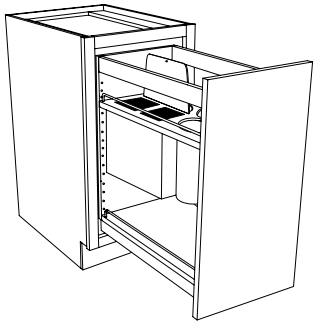

BPKBU15

DESIGN CONSIDERATIONS

34½" High - 24" Deep

- Pull out unit attached to door
- Round stainless steel bin for utensils
- 12" has one stainless steel bin
- 15" has four stainless steel bins
- Two square openings with unique bristle knife storage
- One wood shelf with chrome railing
- Includes a slot for four thin cutting board mats (included)
- Dimensional modifications not available
- Includes soft close

HOW TO ORDER

- Pricing P-167

Block 3994 Base Pull Out Pantry Utensil Storage

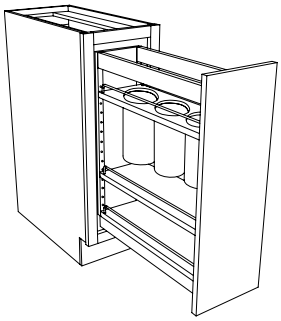

BPU09

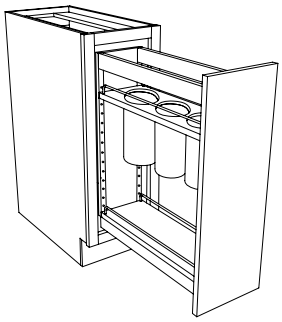

BPU12

DESIGN CONSIDERATIONS

34½" High - 24" Deep

- Pull out pantry attached to door
- Shelves are wood with chrome railing
- One adjustable shelf with three round stainless steel bins for utensils.
- One fixed shelf
- BPU09 includes one additional adjustable shelf
- Includes soft close
- Dimensional modifications not available

HOW TO ORDER

- Pricing P-168

NOTES/CAUTION

- 9" wide cabinets not available in Inset

© Copyright StarMark Cabinetry MARCH 2021

Block 3995 Base Pantry with Chrome/Wood Shelves and Baskets

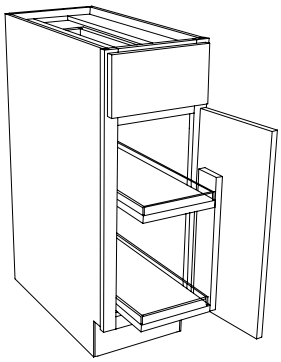

BPTY09
BPTY12
BPTY15
BPTY18
BPTY21

DESIGN CONSIDERATIONS

34½" High, 24" Deep

- 2 adjustable wood baskets with chrome railings and a non-skid surface
- Basket track is on the same side as door hinge
- No modifications available
- Frame rated for a 53 pound load capacity
- 9" wide cabinets specified in a Traditional overlay door style with a 5-piece drawer header will receive a slab drawer header

HOW TO ORDER

- Specify L or R hinging
- Pricing P-168

Width of cabinet	Width of baskets
9"	4"
12"	6"
15"	9"
18"	12"
21"	15"

NOTES/CAUTION

- 9" wide cabinets not available in inset.
- Inset concealed hinges not available.

Block 3996 Base Full Height Chrome Pantry with Soft Close

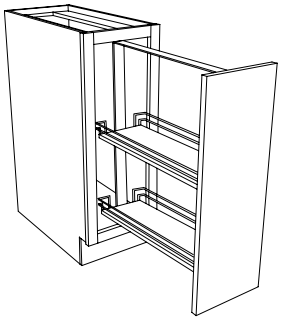

BFCPTYSC09
BFCPTYSC12
BFCPTYSC15
BFCPTYSC18
BFCPTYSC21

DESIGN CONSIDERATIONS

34½" High - 24" Deep

- Two adjustable wood trays with chrome railings and a non-skid surface.
- Pull out pantry attached to door
- Includes soft close
- Dimensional modifications not available

HOW TO ORDER

- Pricing P-168

NOTES/CAUTION

- 9" wide cabinets not available in Inset

Width of cabinet	Width of Trays
9"	5"
12"	8"
15"	11"
18"	14"
21"	17"

Block 3997 Base Pantry with OXO Storage

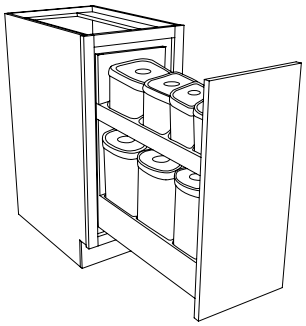

BPOXO12

DESIGN CONSIDERATIONS

34½" High - 24" Deep

- Pull out pantry attached to door
- Includes soft close
- Wood unit with adjustable shelves
- Upper shelf includes four small OXO containers
- Lower shelf includes 3 large OXO containers
- OXO is a well known, high quality storage and organization brand
- Width modifications or reduced height modifications are not available.

HOW TO ORDER

- Pricing P-168

© Copyright StarMark Cabinetry MARCH 2021

Block 4000 Base Full Height Door with Tall Roll Out Trays

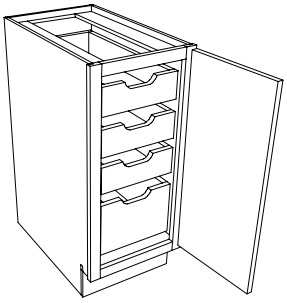

BF135RTT
BF15RTT
BF165RTT
BF18RTT

BF195RTT
BF21RTT
BF225RTT
BF24RTT

DESIGN CONSIDERATIONS

34 ½" High - 24" Deep

- 4 roll out trays
- Top 3 trays are 4⅜" high
- Bottom tray is 7⅞" high

HOW TO ORDER

- Specify **L** or **R** hinging
- BF135RTT, BF165RTT, BF195RTT, and BF225RTT are half sizes. For example BF135RTT is 13½" wide.
- Pricing P-169

Block 4010 Base with Roll Out Trays

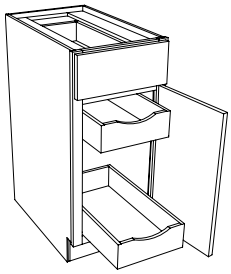

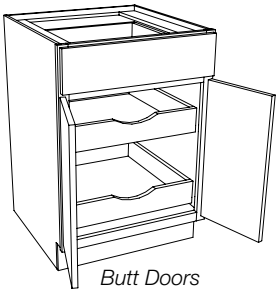

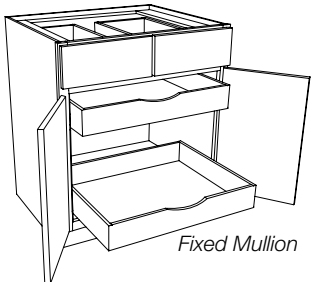

Single Door
B135RT
B15RT
B165RT
B18RT
B195RT
B21RT
B225RT
B24RT

Butt Doors
2B24RT
2B27RT
2B30RT
2B33RT
2B36RT
2B39RT
2B42RT

Fixed Mullion
B30RT
B33RT
B36RT
B39RT
B42RT

DESIGN CONSIDERATIONS

34½" High - 24" Deep

- 2 adjustable roll out trays
- Mullion attached to left door on Traditional overlay styles.
- Modern style doors will be butt doors.
- On Fixed Mullion cabinets, Modern door styles will have butt drawer headers.

HOW TO ORDER

- Specify **L** or **R** hinging on Single Door cabinet
- B135RT, B165RT, B195RT, and B225RT are half sizes. For example B135RT is 13½" wide.
- Pricing P-169

Block 4020 Base with Roll Out Tray Divider

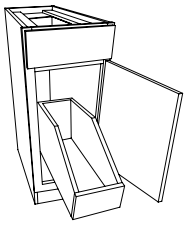

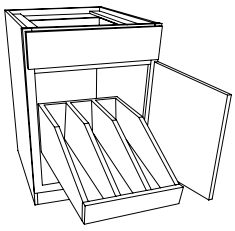

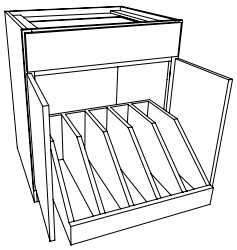

Single Door
BRTTD12

Single Door
BRTTD15
BRTTD18
BRTTD21
BRTTD24

Butt Doors
2BRTTD24
2BRTTD27
2BRTTD30
2BRTTD33
2BRTTD36

DESIGN CONSIDERATIONS

34½" High - 24" Deep

- Roll out tray with dividers
- Number of sections based on cabinet width. See chart.
- Floor mounted full extension glides

HOW TO ORDER

- Specify **L** or **R** hinging on Single Door cabinet
- Pricing P-170

Cabinet Width	Roll tray sections
12"	1
15", 18", 21", 24"	3
27", 30", 33", 36"	5

© Copyright StarMark Cabinetry MARCH 2021

Block 4030 Range Base Reverse

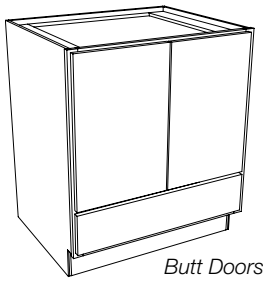

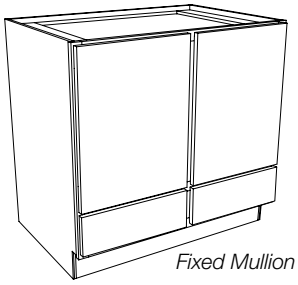

Butt Doors
2RBR30
2RBR33
2RBR36
2RBR39
2RBR42

Fixed Mullion
RBR36
RBR39
RBR42
RBR45
RBR48

DESIGN CONSIDERATIONS

34½" High - 24" Deep

- No shelf

HOW TO ORDER

- Pricing P-170

Block 4035 Two Drawer Base with Wide Top Rail

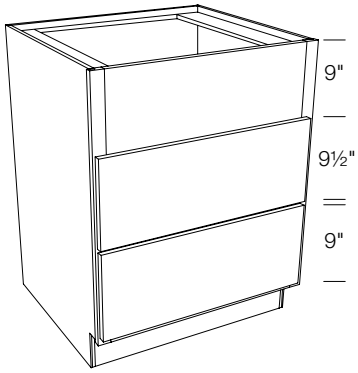

2DBWT27
2DBWT30
2DBWT33
2DBWT36
2DBWT39
2DBWT42

DESIGN CONSIDERATIONS

34½" High - 24" Deep

- Use this base cabinet to accommodate special cook-tops
- 8½" reveal on wide top rail above drawers

HOW TO ORDER

- Pricing P-170

INSTALLATION TIP

- Trim the wide top rail on the jobsite

Block 4037 Four Drawer Base with Wide Top Rail

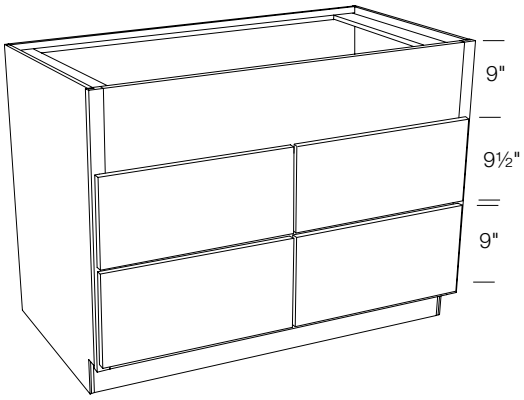

4DBWT45
4DBWT48
4DBWT51
4DBWT54

DESIGN CONSIDERATIONS

34½" High - 24" Deep

- Use this base cabinet to accommodate special wide cooktops
- 8½" reveal on wide top rail above drawers
- Deep drawer storage

HOW TO ORDER

- Pricing P-171

INSTALLATION TIP

- Trim the wide top rail on the jobsite

© Copyright StarMark Cabinetry MARCH 2021

Block 4040 Range Base Reverse with Roll Out Trays

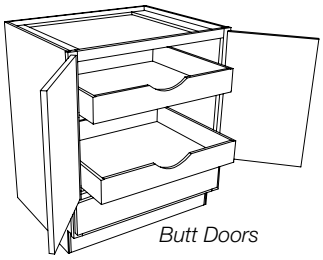

Butt Doors
2RBR30RT
2RBR33RT
2RBR36RT

DESIGN CONSIDERATIONS

34½" High - 24" Deep

- 2 adjustable wood roll out trays

HOW TO ORDER

- Pricing P-171

Block 4050 Down Draft Range Base

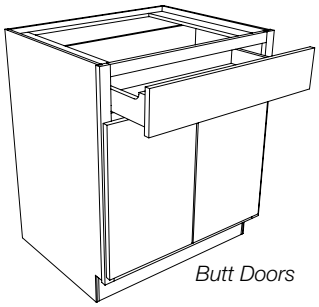

Butt Doors
2DDRB30
2DDRB36

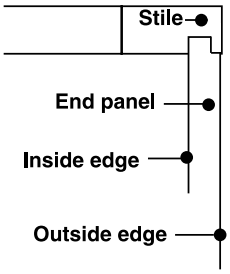

DESIGN CONSIDERATIONS

34½" High - 24" Deep

- Scooped drawer reduced in depth to allow for false back to accommodate cooktop venting
- False back at 15" deep
- End panels are shifted to outside frame edge, eliminating ¼" reveal. End panels are not flush. See detail.

HOW TO ORDER

- Pricing P-171

Block 4051 Base Oven Cabinet

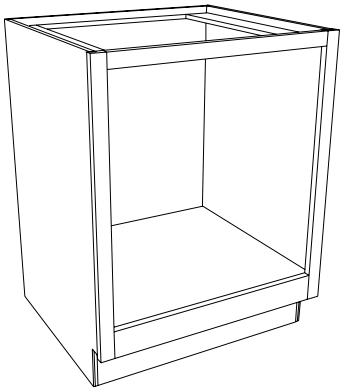

BOC27
BOC30
BOC31
BOC33
BOC36

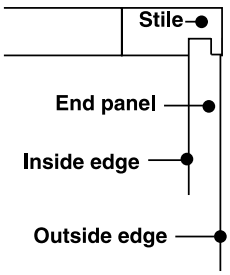

DESIGN CONSIDERATIONS

34½" High - 24" Deep

- Standard melamine interior
- ¾" floor in oven opening
- ✪ Specify, using an Appliance Template, the dimensions of the cutout. Keep in mind:
  - The maximum width of the cutout is 2" less than the overall cabinet width
  - The top rail must be a minimum of 1"
  - The bottom rail must be a minimum of 2"
- End panels are shifted to outside frame edge, eliminating ¼" reveal. End panels are not flush. See detail.

HOW TO ORDER

✪ To order this item, you must fill out and send an Appliance Template with the order.

- Pricing P-171

NOTES/CAUTION

- On beaded inset face frames, the appliance opening has a flush face frame unless specified otherwise by a drawing.

© Copyright StarMark Cabinetry MARCH 2021

Block 4052 Base Oven/Microwave Cabinet with Drawer

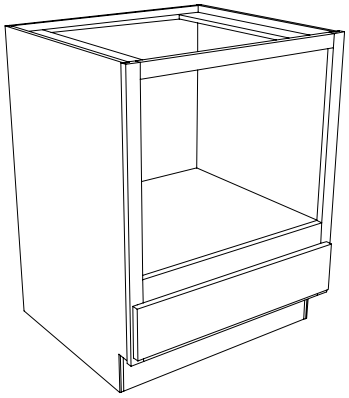

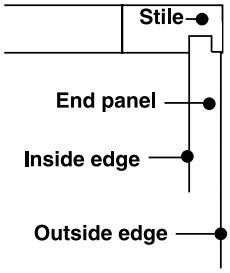

2BOCD24
2BOCD27
2BOCD30
2BOCD31
2BOCD33
2BOCD36

DESIGN CONSIDERATIONS

34½" High - 24" Deep

- ¾" floor in opening
- Standard melamine interior
- 3" rail between drawer and cutout
- ✪ Specify, using an Appliance Template, the dimensions of the cutout. Keep in mind:
  - The maximum width of the cutout is 2" less than the overall cabinet width
  - The top rail must be a minimum of 1"
  - The center rail must be a minimum of 2"
- End panels are shifted to outside frame edge, eliminating ¼" reveal. End panels are not flush. See detail.

HOW TO ORDER

- ✪ To order this item, you must fill out and send an Appliance Template with the order.
- Pricing P-172

NOTES/CAUTION

- On beaded inset face frames, the appliance opening has a flush face frame unless specified otherwise by a drawing.

Block 4053 Base Dishwasher

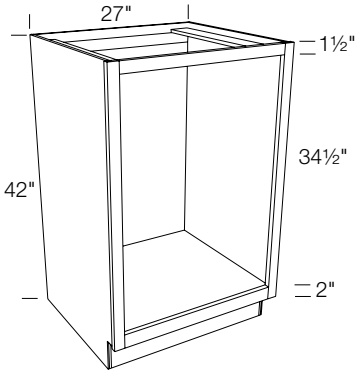

BODW2742

DESIGN CONSIDERATIONS

42" High - 24" Deep

- ¾" thick floor in dishwasher opening
- Standard melamine interior

HOW TO ORDER

- Order a false drawer front (block 11020) to cover the toe kick area of the dishwasher
- Pricing P-172

NOTES/CAUTION

- On beaded inset face frames, the appliance opening has a flush face frame unless specified otherwise by a drawing.

Block 4054 Base Dishwasher with Drawer

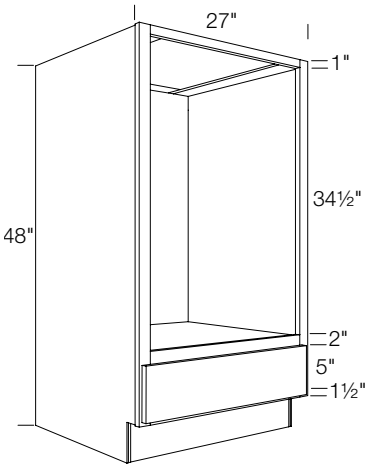

BODWD2748

DESIGN CONSIDERATIONS

48" High - 24" Deep

- ¾" thick floor in dishwasher opening
- Standard melamine interior

HOW TO ORDER

- Order a false drawer front (block 11020) to cover the toe kick area of the dishwasher
- Pricing P-172

NOTES/CAUTION

- On beaded inset face frames, the appliance opening has a flush face frame unless specified otherwise by a drawing.

© Copyright StarMark Cabinetry MARCH 2021

Block 4057 Flush Oven Cabinet with Drawer

NEW!

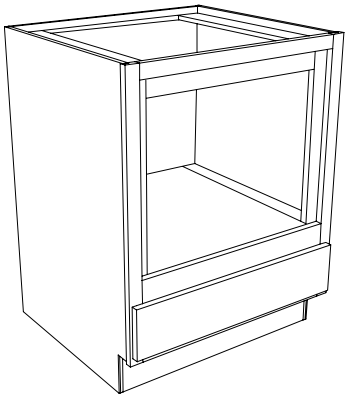

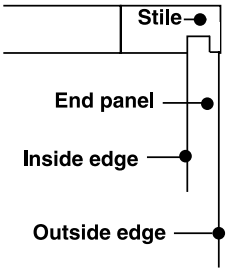

2BOCD24FL
2BOCD27FL
2BOCD30FL
2BOCD31FL
2BOCD33FL
2BOCD36FL

DESIGN CONSIDERATIONS

34½" High - 24" Deep

- ¾" floor in opening
- Finished Veneer interior
- 3" rail between drawer and cutout
- Drawer opening may be affected by cutout
- ✪ Specify, using an Appliance Template, the dimensions of the cutout. Keep in mind:
  - The maximum width of the cutout is 2" less than the overall cabinet width
  - The top rail must be a minimum of 1"
  - The center rail must be a minimum of 2"
- End panels are shifted to outside frame edge, eliminating ¼" reveal. End panels are not flush. See detail.
- Specifically designed for inset ovens
- Secondary frame for oven to set flush with the main cabinet frame.

HOW TO ORDER

✪ To order this item, you must fill out and send an Appliance Template with the order.

- Pricing P-172

NOTES/CAUTION

- On beaded inset face frames, the appliance opening has a flush face frame unless specified otherwise by a drawing.

Block 4058 Base Microwave Tall

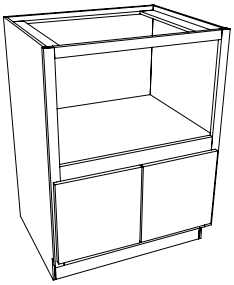

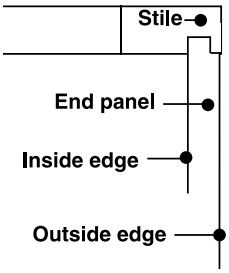

Butt Doors
2BMWT27
2BMWT30
2BMWT33
2BMWT36

DESIGN CONSIDERATIONS

40½" High - 24" Deep

- No shelf
- Standard melamine interior
- End panels are shifted to outside frame edge, eliminating ¼" reveal. End panels are not flush. See detail.

HOW TO ORDER

✪ To order this item, you must fill out and send an Appliance Template with the order.

- Pricing P-173

NOTES/CAUTION

- On beaded inset face frames, the appliance opening has a flush face frame unless specified otherwise by a drawing.

Block 4060 Range Mate

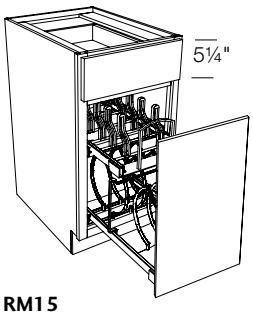

RM15
RM24

DESIGN CONSIDERATIONS

34½" High - 24" Deep

- Two-tier chrome plated wire rack
- RM15 top rack holds up to seven lids
- RM24 top rack holds up to 12 lids
- Bottom rack is adjustable to hold pots and pans in many sizes
- Full extension glides
- The rack is mounted to the cabinet floor. The door and the range mate are attached and slide out as one unit.
- Dimensional modifications not available

HOW TO ORDER

- Pricing P-173

© Copyright StarMark Cabinetry MARCH 2021

Block 4065 Base Mixer Shelf

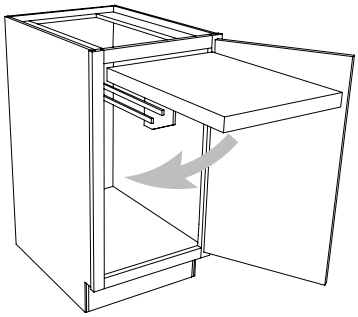

BMXS18

DESIGN CONSIDERATIONS

34½" High - 24" Deep

- This cabinet accommodates most standup mixers, including the KitchenAid professional series mixer.
- The mixer will be easy to access and can stay off the counter, reducing clutter.
- The mixer shelf is a 1½" thick chopping block that holds up to 50 lbs. Some mixers can be secured right to the shelf.
- The depth of the mixer will determine the height of the space for the mixer.
- Dimensional modifications not available
- Cannot accommodate a floor-mount roll tray.

HOW TO ORDER

- Specify **L** or **R** hinging
- Pricing P-173

NOTES/CAUTION

- Inset concealed hinges not available.

Block 4067 Base Plastic Ware Storage

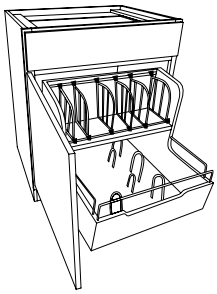

BPS18
BPS24

DESIGN CONSIDERATIONS

34½" High - 24" Deep

- Wood storage unit with chrome dividers
- Storage unit pulls out of cabinet opening
- Upper area holds lids for plastic containers
- Lower area holds plastic containers
- Pull out storage unit includes soft close
- Chrome dividers in lid area are adjustable
- Width modifications, reduced height modifications and reduced depth modifications are not available.

HOW TO ORDER

- Specify **L** or **R** hinging
- Pricing P-173

NOTES/CAUTION

- Inset concealed hinges not available
- Storage unit is attached to the door in inset.

Block 4095 Base with Wicker Basket Storage

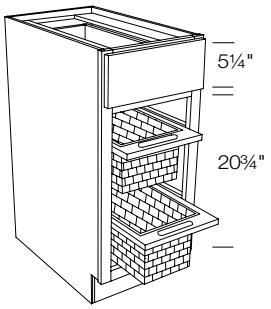

B15WK
B18WK

DESIGN CONSIDERATIONS

34½" High - 24" Deep

- 2 wicker baskets in wood carrier
- Baskets and wood carrier have a natural finish.
- Basket Sizes:
  B15WK – 11 5/16" x 21¼" x 7⅞"
  B18WK – 14 5/16" x 21¼" x 7⅞"
- Dimensional modifications not available
- Finished veneer interior

HOW TO ORDER

- Pricing P-173

© Copyright StarMark Cabinetry MARCH 2021

Block 4100 Kitchen Waste Basket

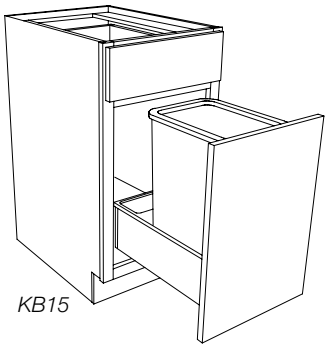

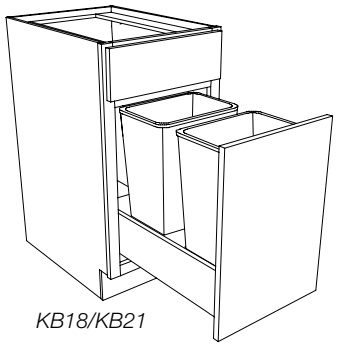

KB15
KB18
KB21

DESIGN CONSIDERATIONS

34½" High - 24" Deep

- Dovetailed wood bottom-mount basket attached to door
- KB15 has one 35 qt. gray colored plastic basket and a small bin for trash bag storage
- KB18 and KB21 have two 35 qt. gray colored plastic baskets
- Soft open and soft close mechanism
- Dimensional modifications not available

HOW TO ORDER

- Pricing P-174

Block 4102 Kitchen Basket Large

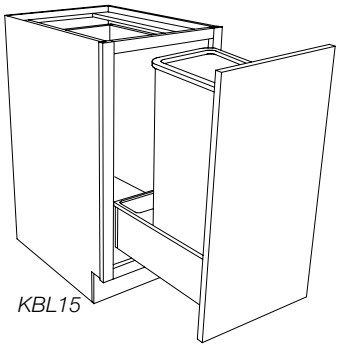

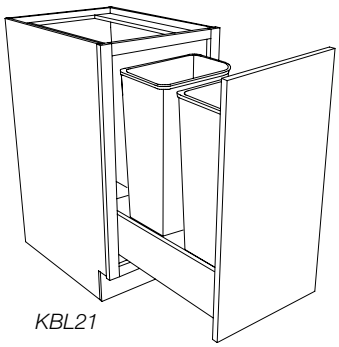

KBL15
KBL21

DESIGN CONSIDERATIONS

34½" High - 24" Deep

- Dovetailed wood bottom-mount basket attached to door
- Soft close mechanism
- KBL15 has one 50 qt. gray colored plastic basket and a small bin for trash bag storage
- KBL21 has two 50 qt. gray colored plastic baskets
- Front basket must be removed before rear basket can be removed.
- Dimensional modifications not available

HOW TO ORDER

- Pricing P-174

Block 4106 Kitchen Basket with Motion Drive Opening

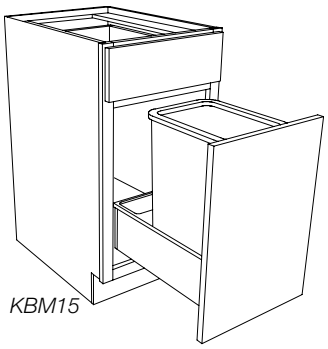

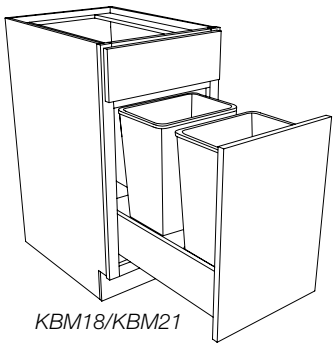

KBM15
KBM18
KBM21

DESIGN CONSIDERATIONS

34½" High - 24" Deep

- Touch the cabinet door to activate motion drive
- Outlet needs to be installed near unit, not directly behind.
- Dovetailed wood bottom-mount basket attached to door
- Dimensional modifications not available
- KBM15 has one 35 qt. gray colored plastic basket and a small bin for trash bag storage.
- KBM18 and KBM21 have two 35 qt. gray colored plastic baskets
- Front basket includes a lid
- Front basket must be removed before rear basket can be removed.

HOW TO ORDER

- Pricing P-174

INSTALLATION TIP

- Partial wiring needs to be completed on jobsite.
- Installer will need to drill access hole in rear of cabinet for wiring.

© Copyright StarMark Cabinetry MARCH 2021

Block 4108 Kitchen Basket Large with Motion Drive Opening

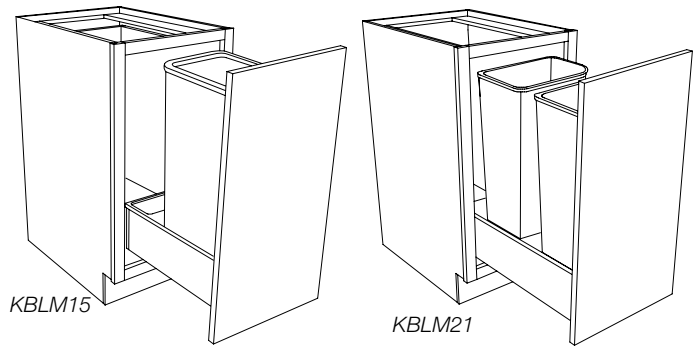

KBLM15
KBLM21

DESIGN CONSIDERATIONS

34½" High - 24" Deep

- Touch the cabinet door to activate motion drive
- Outlet needs to be installed near unit, not directly behind.
- Dovetailed wood bottom-mount basket attached to door
- Dimensional modifications not available
- KBLM15 has one 50 qt. gray colored plastic basket and a small bin for trash bag storage.
- KBLM21 has two 50 qt. gray colored plastic baskets
- Front basket includes a lid
- Front basket must be removed before rear basket can be removed.

HOW TO ORDER

- Pricing P-174

INSTALLATION TIP

- Partial wiring needs to be completed on jobsite.
- Installer will need to drill access hole in rear of cabinet for wiring.

Block 4110 Kitchen Waste Basket with Chopping Block

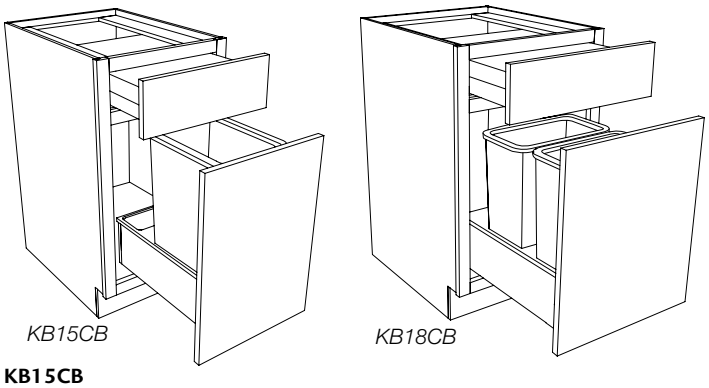

KB15CB
KB18CB

DESIGN CONSIDERATIONS

34½" High - 24" Deep

- Dovetailed wood bottom-mount baskets attached to door
- Chopping block is removable and is shipped separately
- Top drawer pulls open to access wood chopping block
- Drawer sides are reduced to accommodate chopping block
- KB15CB has one 35 qt. gray colored plastic basket and a small bin for trash bag storage
- KB18CB has two 35 qt. gray colored plastic baskets
- Soft open and soft close mechanism
- Dimensional modifications not available
- Soft close hinges are not available on this cabinet.

HOW TO ORDER

- Pricing P-174

Block 4112 Kitchen Basket with Motion Drive Opening and Chopping Block

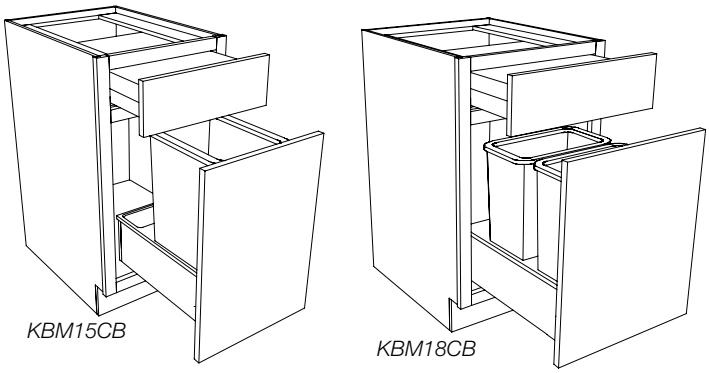

KBM15CB
KBM18CB

DESIGN CONSIDERATIONS

34½" High - 24" Deep

- Touch the cabinet door to activate motion drive
- Outlet needs to be installed near unit, not directly behind.
- Dovetailed wood bottom-mount basket attached to door
- Dimensional modifications not available
- Top drawer pulls open to access wood chopping block
- Chopping block is removable and is shipped separately.
- KBM15CB has one 35 qt. gray colored plastic basket and a small bin for trash bag storage.
- KBM18CB has two 35 qt. gray colored plastic baskets
- Front basket includes a lid
- Front basket must be removed before rear basket can be removed.

HOW TO ORDER

- Pricing P-175

INSTALLATION TIP

- Partial wiring needs to be completed on jobsite.
- Installer will need to drill access hole in rear of cabinet for wiring.

© Copyright StarMark Cabinetry MARCH 2021

Block 4130 Recycle Base

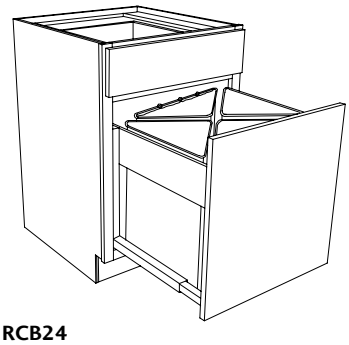

RCB24

DESIGN CONSIDERATIONS

34½" High - 24" Deep

- Pull out recycle center attached to door
- Separate removable bins - 3 poly bins, 1 canvas bin
- Poly bin = 25 qt.
- Canvas bin = 18 qt.
- Dimensional modifications not available
- Soft close mechanism.

HOW TO ORDER

- Pricing P-175

Block 4140 Bar Maid

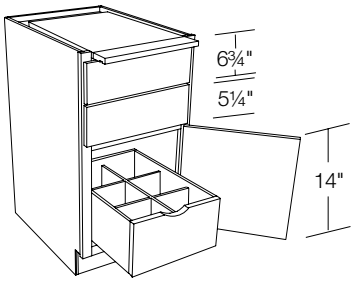

BM18

DESIGN CONSIDERATIONS

34½" High - 24" Deep

- Wood bread board and wood cutlery divider
- Wood bar box holds 6 one liter bottles

HOW TO ORDER

- Specify **L** or **R** hinging
- Pricing P-175

NOTES/CAUTION

- Inset concealed hinges not available.

© Copyright StarMark Cabinetry **MARCH 2021**

Block 4300 Accessible Base with Drawer

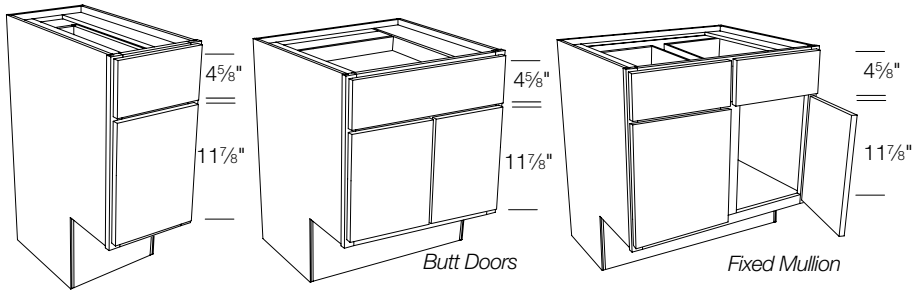

DESIGN CONSIDERATIONS

31½" High - 24" Deep
- 10½" toe space height
- 9" toe space depth
- See block 12200 for toe board trim

HOW TO ORDER
- Specify **L** or **R** hinging for single door cabinet
- Pricing P-175

Single Door	Butt Doors	Fixed Mullion
HCBD12	**2HCBD24**	**HCBD30**
HCBD15	**2HCBD27**	**HCBD33**
HCBD18	**2HCBD30**	**HCBD36**
HCBD21	**2HCBD33**	**HCBD39**
HCBD24	**2HCBD36**	**HCBD42**
	2HCBD39	**HCBD45**
	2HCBD42	**HCBD48**

Block 4310 Accessible Base

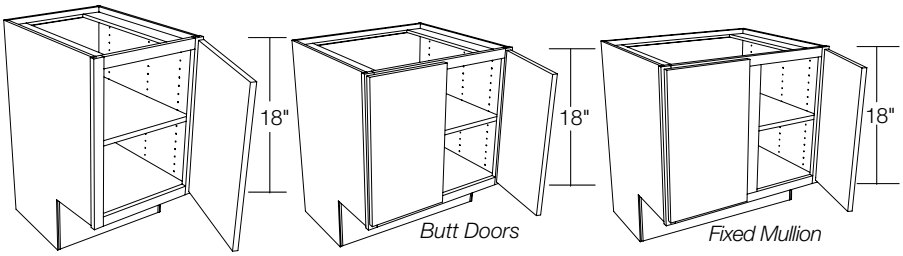

DESIGN CONSIDERATIONS

31½" High - 24" Deep
- Full depth shelf
- 10½" toe space height
- 9" toe space depth
- See block 12200 for toe board trim

HOW TO ORDER
- Specify **L** or **R** hinging for single door cabinet
- Pricing P-176

Single Door	Butt Doors	Fixed Mullion
HCB12	**2HCB24**	**HCB30**
HCB15	**2HCB27**	**HCB33**
HCB18	**2HCB30**	**HCB36**
HCB21	**2HCB33**	**HCB39**
HCB24	**2HCB36**	**HCB42**
	2HCB39	**HCB45**
	2HCB42	**HCB48**

Block 4312 Accessible Sink/Range Base

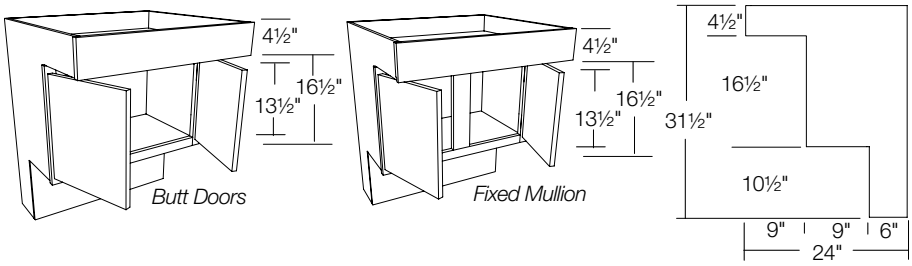

DESIGN CONSIDERATIONS

31½" High - 24" Deep
- No shelf
- 10½" toe space height
- 9" toe space depth
- See block 12200 for toe board trim
- Solid face frame valance as top rail of cabinet
- Shallow sink must be used with this cabinet.
- Furniture Ends (block 9030) are not available on this cabinet.

HOW TO ORDER
- Pricing P-176

Butt Doors	Fixed Mullion
2HCSRB30	**HCSRB39**
2HCSRB33	**HCSRB42**
2HCSRB36	**HCSRB45**
	HCSRB48

© Copyright StarMark Cabinetry MARCH 2021

Block 4315 Accessible Deep Drawer Base

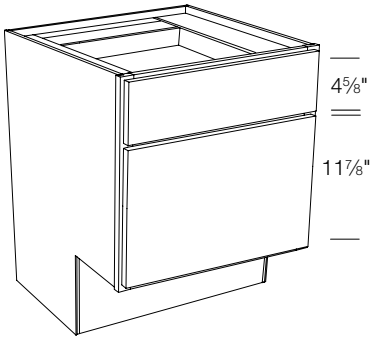

HCDDB12
HCDDB15
HCDDB18
HCDDB21
HCDDB24
HCDDB27
HCDDB30
HCDDB33
HCDDB36
HCDDB39
HCDDB42

DESIGN CONSIDERATIONS

31½" High - 24" Deep
- 10½" toe space height
- 9" toe space depth
- See block 12200 for toe board trim

HOW TO ORDER

- Pricing P-177

Block 4320 Accessible Drawer Base

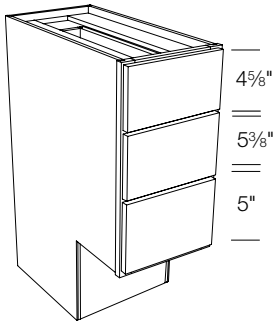

HC3DB12
HC3DB15
HC3DB18
HC3DB21
HC3DB24
HC3DB27
HC3DB30
HC3DB33
HC3DB36
HC3DB39
HC3DB42

DESIGN CONSIDERATIONS

31½" High - 24" Deep
- 10½" toe space height
- 9" toe space depth
- See block 12200 for toe board trim

HOW TO ORDER

- Pricing P-177

NOTES/CAUTION

- Five piece drawer headers not available in inset.

Block 4322 Accessible Square Super Susan

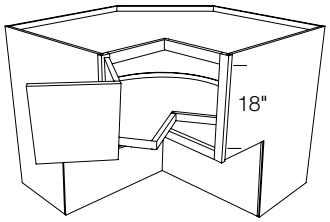

HCSSSW33
HCSSSW36

DESIGN CONSIDERATIONS

31½" High - 24" Deep
- One 28" diameter wood turntable for the 33" cabinet
- One 32" diameter wood turntable for the 36" cabinet
- 10½" toe space height
- 9" toe space depth
- See block 12200 for toe board trim

HOW TO ORDER

- Specify **L** or **R** hinging
- Pricing P-177

© Copyright StarMark Cabinetry MARCH 2021

Block 4399 Base with Wine Rack Below Drawer

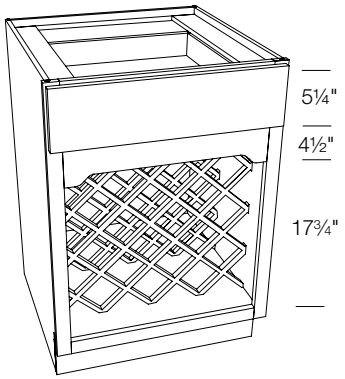

Full Width Drawer
BXX24
2BXX27
2BXX30
2BXX33
2BXX36

DESIGN CONSIDERATIONS

34½" High - 24" Deep

- Ogee edge on frame opening
- Finished veneer interior
- Arch valance is standard
- Front wine rack is 4" behind frame. Rear wine rack is 11" behind frame.

HOW TO ORDER

- Other valances are available. See block 9170 for Valance Top Rail options.
- Ogee edge on frame may be modified when certain valances are specified. See HelpZone for information.
- Pricing P-178

Cabinet Width	Bottle Capacity
24"	12
27"	17
30"	17
33"	22
36"	22

Block 4400 Wall Base Criss Cross Wine Rack

I

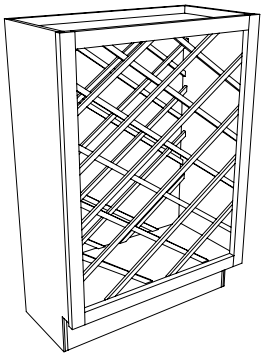

WBXXW1534
WBXXW1834
WBXXW2134

WBXXW2434
WBXXW2734
WBXXW3034
WBXXW3334
WBXXW3634

DESIGN CONSIDERATIONS

34½" High - 12" Deep

- Ogee edge on frame opening
- Finished veneer interior

HOW TO ORDER

- Pricing P-178

Cabinet Width	Bottle Capacity
15"	10
18"	10
21"	17
24"	17
27"	24
30"	24
33"	31
36"	32

Block 4402 Wall Base with Wine Rack Below Open Shelf

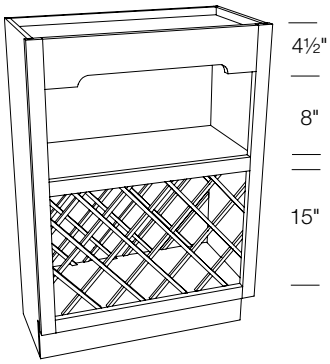

WBXWX2434
WBXWX2734
WBXWX3034
WBXWX3334
WBXWX3634

DESIGN CONSIDERATIONS

34½" High - 12" Deep

- Ogee edge on frame opening
- Finished veneer interior
- Arch valance is standard

HOW TO ORDER

- Other valances are available. See block 9170 for Valance Top Rail options.
- Ogee edge on frame may be modified when certain valances are specified. See HelpZone for information.
- Pricing P-178

Cabinet Width	Bottle Capacity
24"	7
27"	10
30"	10
33"	13
36"	13

© Copyright StarMark Cabinetry MARCH 2021

Block 4405 Wall Base Wine Rack

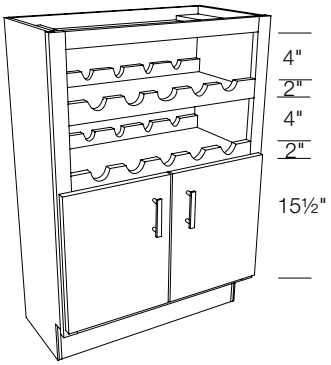

Butt Doors
2WB2W2434
2WB2W3034
2WB2W3634

DESIGN CONSIDERATIONS

34½" High - 12" Deep
- Ogee edge on frame opening
- Finished veneer interior
- No shelf

HOW TO ORDER

- Pricing P-178

Cabinet Width	Bottle Capacity
24"	8
30"	10
36"	12

Block 4408 Wall Base Wine Cubes

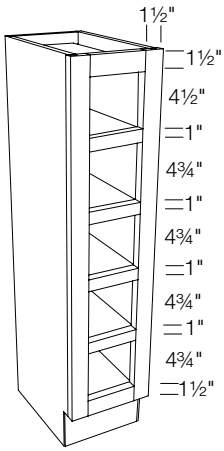

WB0734CUB5

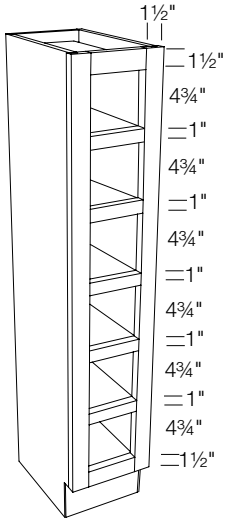

WBT0740CUB6

DESIGN CONSIDERATIONS

34½", 40½" High - 12" Deep
- Finished veneer interior
- Cube openings sizes cannot be modified.
- 1" frame rails between cube openings.

HOW TO ORDER

- Pricing P-179

Block 4411 Base Wine Diagonal

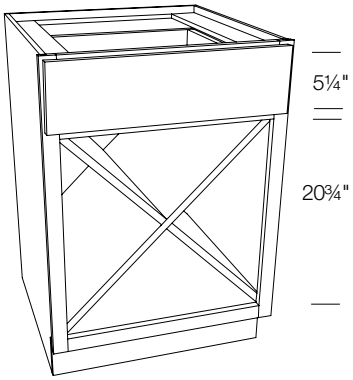

BWWDIA24

DESIGN CONSIDERATIONS

34½" High - 24" Deep
- Ogee edge on frame opening
- ¾" thick cross members
- Finished veneer interior
- Dimensional modifications not available

HOW TO ORDER

- Pricing P-179

© Copyright StarMark Cabinetry MARCH 2021

Block 4420 Butcher Block Top

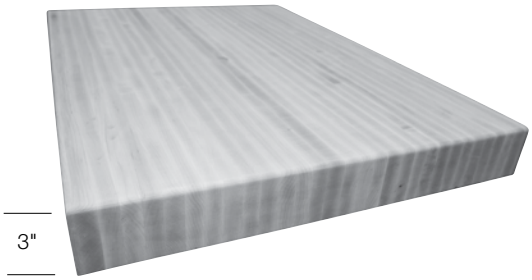

BBTOP per square foot

DESIGN CONSIDERATIONS

- 3" thick solid maple
- Maximum depth is 30"
- Maximum width is 72"
- Oil finish; receives three oil treatments before it's shipped.
- Use this counter top for blocks 4425-4430
- Grain direction will follow the width of the top
- Care instructions are posted on OneTouch, in Installation and Care.

HOW TO ORDER

- Square foot pricing
- Specify size as depth by width
- Cannot be placed on rush schedule
- Pricing P-179

ISLAND OPTIONS

For blocks
4425
4430
4435

LEG	VALANCE
Tapered	Eyebrow (EYE)
Plain	Straight (SVL)
Fluted	
Rope	

Onlays can be field applied to these locations:

- the side, whether it's a slab drawer front or valance. A pair of onlays can be applied to each end, or one large onlay can be applied to the center.
- the valances, if they are EYE or SVL. A pair of onlays can be applied to each end, or one large onlay can be applied to the center.
- all four styles of legs.

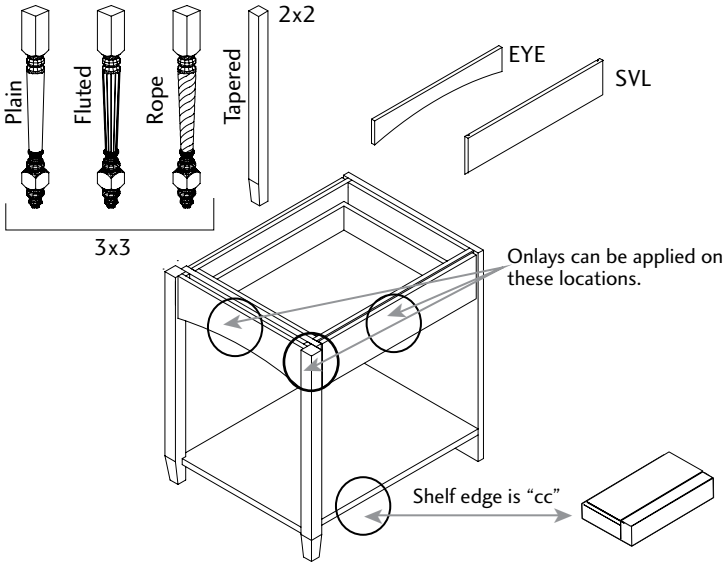

Block 4425 Base Island Unit

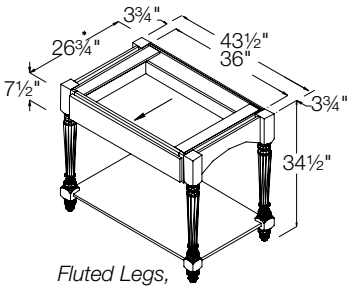

Fluted Legs, Eyebrow Valance

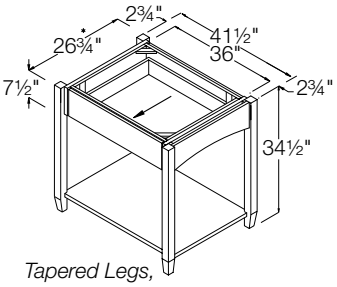

Tapered Legs, Eyebrow Valance

BIU36-EYE
BIU36-SVL

* Tapered legs will be oak on hickory island.

DESIGN CONSIDERATIONS

34½" High - 26¾" Deep

- This is a stand-alone unit
- One functional drawer
- A false drawer front is standard on the peninsula side
- A shelf is attached at toe height between legs. The edge on the shelf is "cc".
- Four leg options and three valance options are available. See list and illustrations above.
- Plain, Fluted and Rope legs are styled with a bun foot.
- Onlays are available. They are field applied. On this island unit, there are two sides, two valances and four legs which can accept onlays.
- Available in Cherry, Hickory*, Maple and Oak.

HOW TO ORDER

- Specify **LEG** in the Special Information column. **TP** for Plain Turned Post, **TPR** for Rope Turned Post, **TPF** for Fluted Turned Post. To specify a Tapered Leg, DO NOT add a suffix.
- Pricing P-179

© Copyright StarMark Cabinetry MARCH 2021

Block 4427 Base Island Unit - Style B

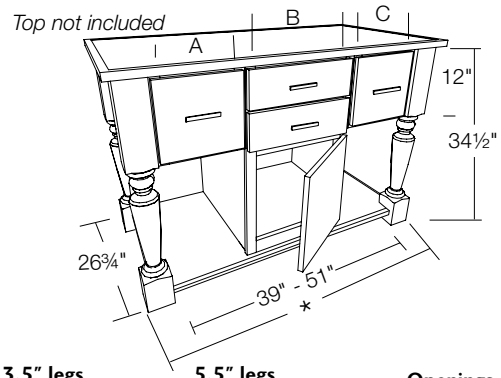

* Overall dimensions including posts:
5½" posts add 11" to width (48" wide = 59")
3½" posts add 7" to width (48" wide = 55")

3.5" legs	5.5" legs
BIUB3935	BIUB3955
BIUB4235	BIUB4255
BIUB4535	BIUB4555
BIUB4835	BIUB4855
BIUB5135	BIUB5155

Openings A	B	C
9"	12"	9"
12"	9"	12"
12"	12"	12"
12"	15"	12"
12"	18"	12"

BLOCK 14000

Posts	Legs
GP86334	GL53334
GP86534	GL53534
GP87334	GL05334SQR
GP87534	GL06334SQR
GP88334	
GP88534	

DESIGN CONSIDERATIONS

34½" High - 26¾" Deep

- This is a stand-alone unit
- 47½" - 63½" overall width range
- Four functional drawers
- False drawer fronts are standard on the peninsula side
- A shelf is attached at toe height between legs. The edge on the shelf is "cc".
- Onlays are available. On this island unit, there are two sides, two valances and four legs which can accept onlays.
- Choose from the posts and legs in chart on the left, from block 14000
- Hardware shown in illustration not included.
- 12" eyebrow valance on both ends

HOW TO ORDER

- Specify leg/post option. **BIUB__** then style option. If plain do not specify style option. Example: BIUB-GP86534-FLUTS
- Pricing P-180

Block 4428 Base Island Unit - Style C

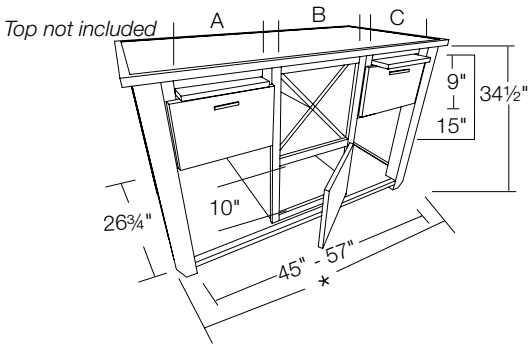

* Overall dimensions including posts:
5½" posts add 11" to width (48" wide = 59")
3½" posts add 7" to width (48" wide = 55")

3.5" legs	5.5" legs
BIUC4535	BIUC4555
BIUC4835	BIUC4855
BIUC5135	BIUC5155
BIUC5435	BIUC5455
BIUC5735	BIUC5755

Openings A	B	C
10.5"	15"	10.5"
12"	15"	12"
13.5"	15"	13.5"
15"	15"	15"
16.5"	15"	16.5"

BLOCK 14000

Posts	Legs
GP86334	GL53334
GP86534	GL53534
GP87334	GL05334SQR
GP87534	GL06334SQR
GP88334	
GP88534	

DESIGN CONSIDERATIONS

34½" High - 26¾" Deep

- This is a stand-alone unit
- 53½" - 69½" overall width range
- Two functional drawers
- False drawer fronts are standard on the peninsula side
- A shelf is attached at toe height between legs. The edge on the shelf is "cc".
- ¾" thick cross members in wine storage area
- Two bread boards
- Bread board does not align with header width on Traditional or Modern overlay cabinets.
- Can hold up to 20 bottles, depending on their size
- Onlays are available. On this island unit, there are two sides, two valances and four legs which can accept onlays.
- Choose from the posts and legs in chart on the left, from block 14000
- 12" eyebrow valance on both ends

HOW TO ORDER

- Specify leg/post option. **BIUC__** then style option. If plain do not specify style option. Example: BIUC-GP86534-FLUTS
- Pricing P-180

Block 4429 Base Island Unit - Style D

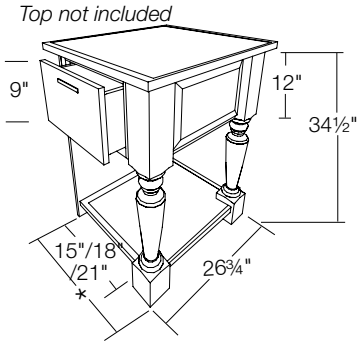

* Overall dimensions including posts:
5½" posts add 8" to width (18" wide = 26")
3½" posts add 6" to width (18" wide = 24")

3.5" legs	5.5" legs
BIUD1835	BIUD1855
BIUD2135	BIUD2155
BIUD2435	BIUD2455

Opening
15"
18"
21"

BLOCK 14000

Posts	Legs
GP86334	GL53334
GP86534	GL53534
GP87334	GL05334SQR
GP87534	GL06334SQR
GP88334	
GP88534	

DESIGN CONSIDERATIONS

34½" High - 26¾" Deep

- 26½" - 36½" overall width range
- One functional drawer
- False drawer fronts are standard on the peninsula side and end
- A shelf is attached at toe height between legs. The edge on the shelf is "cc".
- Choose from the posts and legs in chart on the left, from block 14000

HOW TO ORDER

- Specify leg/post option. **BIUD__** then style option. If plain do not specify style option. Example: BIUD-GP86534-FLUTS
- Specify which side of the cabinet is the peninsula side. Illustration shows right.
- Pricing P-180

© Copyright StarMark Cabinetry MARCH 2021

ISLAND OPTIONS

For blocks
4425
4430
4435

LEG	VALANCE
Tapered	Eyebrow (EYE)
Plain	Straight (SVL)
Fluted	
Rope	

Onlays can be field applied to these locations:

- the side, whether it's a slab drawer front or valance. A pair of onlays can be applied to each end, or one large onlay can be applied to the center.
- the valances, if they are EYE or SVL. A pair of onlays can be applied to each end, or one large onlay can be applied to the center.
- all four styles of legs.

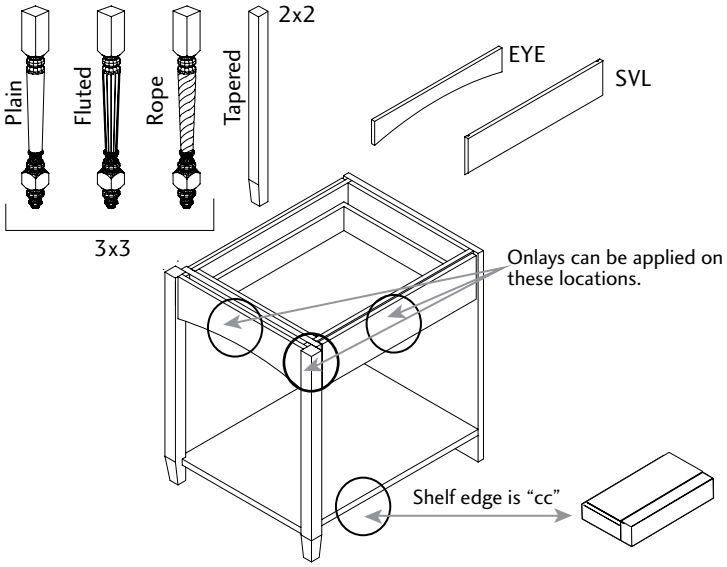

Block 4430 Base Island Assembly - Style A

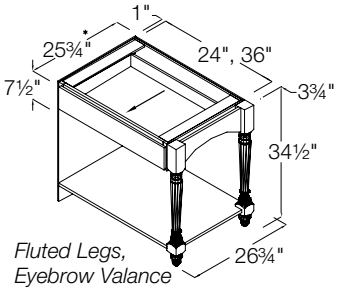

Fluted Legs, Eyebrow Valance

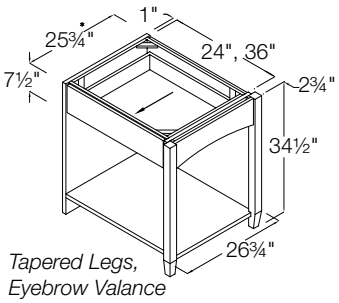

Tapered Legs, Eyebrow Valance

Cherry, Hickory*, Maple, Oak
BIA24-EYE
BIA24-SVL

BIA36-EYE
BIA36-SVL

* Tapered legs will be oak on hickory island.

DESIGN CONSIDERATIONS

•34½" High - 25¾" Deep

- This is designed for the end of a peninsula or island, and to be adjacent to another cabinet.
- One functional drawer
- A false drawer front is standard on the peninsula side
- A peninsula end panel is attached on the end opposite the valance. The panel is finished on one end only.
- A shelf is attached at toe height between legs and panel. The edge on the shelf is "cc".
- Four leg options and three valance options are available. See list and illustrations on page C-188.
- Plain, Fluted and Rope legs are styled with a bun foot.
- Onlays are available. They are field applied. On this island unit, there are two sides, one valance and two legs which can accept onlays.

HOW TO ORDER

- Specify **LEG** in the Special Information column. **TP** for Plain Turned Post, **TPR** for Rope Turned Post, **TPF** for Fluted Turned Post. To specify a Tapered Leg, DO NOT add a suffix.
- Specify **VALANCE PLACEMENT.** Specify **LEFT** or **RIGHT** in the Special information column. Illustrations show Right.
- Specify which side of the cabinet is the peninsula side. Illustration shows right.
- Pricing P-181

© Copyright StarMark Cabinetry MARCH 2021

Block 4435 Base Island Assembly - Style B

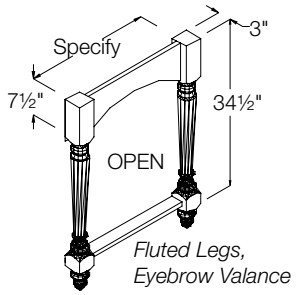

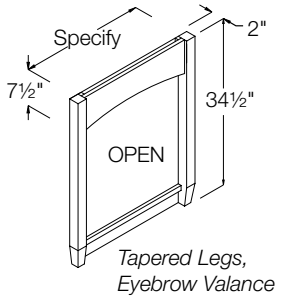

Cherry, Hickory*, Maple, Oak
BIB

* Tapered legs will be oak on hickory island.

DESIGN CONSIDERATIONS

34½" High

- This is a decorative treatment for an end-of-run, or to be applied to both ends of a base cabinet to create a stand-alone island. In both cases, order a finished end(s) for the cabinet.
- Legs are joined with a valance and a rail
- Maximum width is 36"
- Four leg options and three valance options are available. See list and illustrations on page C-188.
- Plain, Fluted and Rope legs are styled with a bun foot.
- Onlays are available. They are field applied. On this island unit, there is one valance and two legs which can accept onlays.

HOW TO ORDER

- Specify **LEG**. Suffix **BIB___** with **TP** for Plain Turned Post, **TPR** for Rope Turned Post, **TPF** for Fluted Turned Post. To specify a Tapered Leg, DO NOT add a suffix.
- Specify **VALANCE** in the Special Information column: **EYE** or **SVL.**
- Pricing P-181

Block 4437 Base Island Assembly - Style C

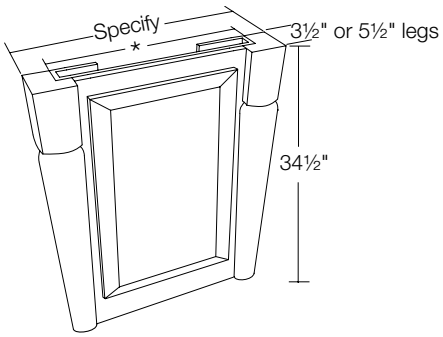

Alder, Cherry, Hickory, Maple, Oak
BIC35
BIC55

DESIGN CONSIDERATIONS

34½" High

- This is a decorative treatment for an end-of-run, or to be applied to both ends of a base cabinet to create a stand-alone island.
- Maximum width is 38¾"
- Under 31⅝" wide receives one MDP
- 31⅝" and wider receives two MDP's
- Designed to match up with the front of the doors of a peninsula cabinet or a 12" and 24" deep cabinet backed up to each other.
- Multiple leg options are available. See block 14000.
- The legs will be notched to fit around panel box.
- MDP (built as FFD in Inset) will match the doors on the rest of the order
- Onlays are available. They are field applied.

HOW TO ORDER

- Specify Leg/Post option. **BIC___** then style option. If plain do not specify style option
  Example: **BIC-GL15534-FLUTS**
- Recommend ordering width so it is equal to cabinet depth and door dimension i.e. 24" cabinet, ⅞" door, ¾" panel, order 25⅝" width **BIC__**.
- Pricing P-181

NOTES/CAUTION

- Built as a Face Frame and Door on end (fixed).

© Copyright StarMark Cabinetry MARCH 2021

Block 4439 Base Island Assembly - Style E

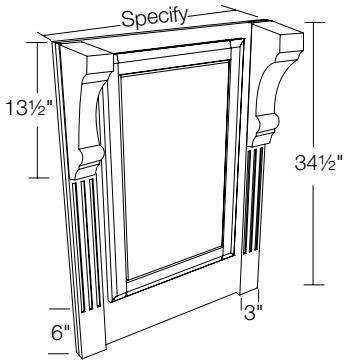

Cherry, Maple, Oak
BIE

DESIGN CONSIDERATIONS

- This is a decorative treatment for an end-of-run, or to be applied to both ends of a base cabinet to create a stand-alone island.
- 1" Peninsula End panel with fluted filler caps, large corbels and MDP applied to panel.
- Maximum width is 38¾"
- Under 30⅛" wide receives one MDP
- 30⅛" and wider receives two MDP's
- Designed to match up with the front of the doors of a peninsula cabinet or a 12" and 24" deep cabinet backed up to each other.
- Flutes stop 13½ " from top and 6" from bottom unless noted otherwise
- MDP (built as FFD in Inset) will match the doors on the rest of the order
- Works with AECBLBRC2 or AECBLNOL1 in block 15100.

HOW TO ORDER

- Specify large corbels. **BIE___** then corbel option. Example: **BIE-AECBLBRC2**
- Recommend ordering width so it is equal to cabinet depth and door dimension i.e. 24" cabinet, ⅞" door, ¾" panel, order 25⅝" width **BIE__**.
- Pricing P-181

Block 4439 Base Island Assembly - Style F

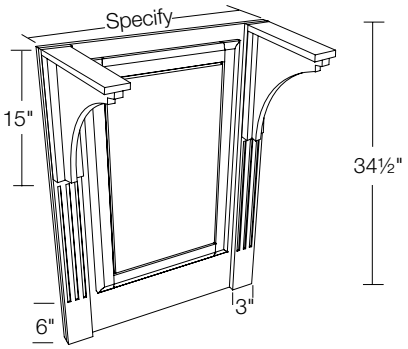

Cherry, Maple, Oak
BIF

DESIGN CONSIDERATIONS

- This is a decorative treatment for an end-of-run, or to be applied to both ends of a base cabinet to create a stand-alone island.
- 1" Peninsula End panel with fluted filler caps, large corbels/brackets and MDP applied to panel.
- Maximum width is 38¾"
- Under 30⅛" wide receives one MDP
- 30⅛" and wider receives two MDP's
- Designed to match up with the front of the doors of a peninsula cabinet or a 12" and 24" deep cabinet backed up to each other.
- Flutes stop 15 " from top and 6" from bottom unless noted otherwise
- MDP (built as FFD in Inset) will match the doors on the rest of the order
- Works with corbels/brackets in blocks 13241, 13251, 13380, 13450

HOW TO ORDER

- Specify corbels/brackets. **BIF___** then corbel option. Example: **BIF-ACANTIS**
- Recommend ordering width so it is equal to cabinet depth and door dimension i.e. 24" cabinet, ⅞" door, ¾" panel, order 25⅝" width **BIF__**.
- Pricing P-181

© Copyright StarMark Cabinetry MARCH 2021

Block 4440 Farmhouse X End Panel

NEW! I

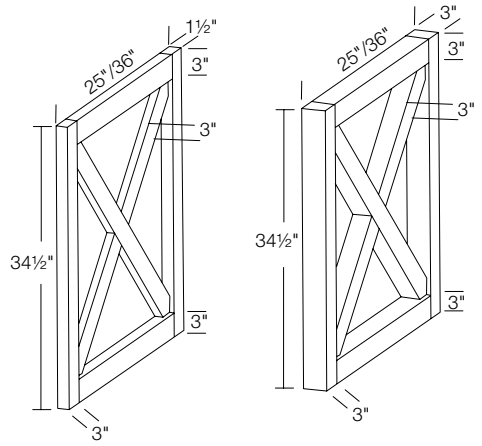

Alder, Cherry, Maple, Oak, Walnut
XPNL1525
XPNL1536
XPNL3025
XPNL3036

DESIGN CONSIDERATIONS

34½" High - 1½", 3" Deep

- 3" WBR
- This is a decorative treatment for an end-of-run or ends of an island
- Solid wood
- No modifications
- X cross members are set back ½" from face of end panel
- X portion is open between cross members and the end panel of the adjacent cabinet will be visible. Order the adjacent cabinet with a Furniture End (Block 9030) or a Flush End (Block 9040).

HOW TO ORDER

- Cannot be placed on rush schedule
- Pricing P-182

Block 4441 Farmhouse X End Panel with Wide Bottom Rail (WBR)

NEW! I

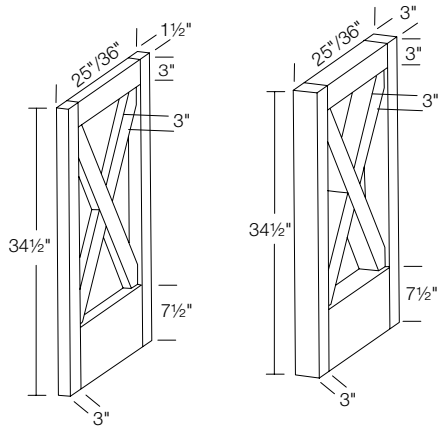

Alder, Cherry, Maple, Oak, Walnut
XPL1525WBR
XPL1536WBR
XPL3025WBR
XPL3036WBR

DESIGN CONSIDERATIONS

34½" High - 1½", 3" Deep

- 7½" WBR
- This is a decorative treatment for an end-of-run or ends of an island
- Solid wood
- No modifications
- X cross members are set back ½" from face of end panel
- X portion is open between cross members and the end panel of the adjacent cabinet will be visible. Order the adjacent cabinet with a Furniture End (Block 9030) or a Flush End (Block 9040).

HOW TO ORDER

- Cannot be placed on rush schedule
- Pricing P-182

© Copyright StarMark Cabinetry MARCH 2021

Block 4450 Base Vertical Apothecary Drawer

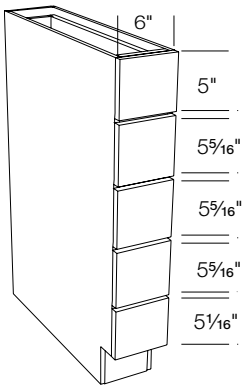

BVAD06

DESIGN CONSIDERATIONS

34½" High - 24" Deep

- Built with ½" end panels
- 5 friction fit ½" hardwood drawers with overlay headers
- Edge banded plywood construction
- If putting this item on the end of a run, always use a base end panel or panel box
- Slab headers with all door styles
- Top drawer header is 5¾" high
- Bottom four drawer headers are 5 13/16" high
- The only end panel modifications available on this cabinet are Stained Ends. See block 9010.

HOW TO ORDER

- Pricing P-182

Block 4460 Base Vertical Wine Rack

I

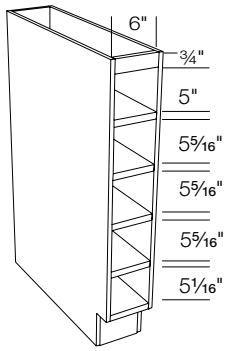

BVWR06

DESIGN CONSIDERATIONS

34½" High - 24" Deep

- Built with ½" end panels
- Edge banded plywood construction
- Finished veneer interior
- If putting this item on the end of a run, always use a base end panel or panel box
- Openings are 5" wide
- The only end panel modifications available on this cabinet are Stained Ends. See block 9010.

HOW TO ORDER

- Pricing P-182

Block 4550 Angled Inside Base

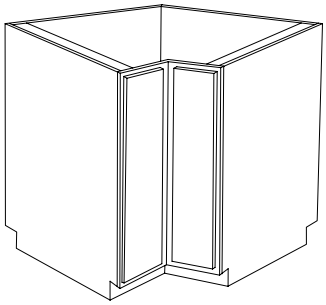

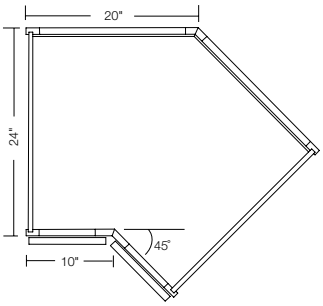

AIBC10

DESIGN CONSIDERATIONS

- 1 adjustable full depth shelf
- Allow 10" from inside corner for installation
- 135˚angle for 45˚ cabinet installation

HOW TO ORDER

- Pricing P-182

© Copyright StarMark Cabinetry MARCH 2021

Block 4555 Angled Outside Base

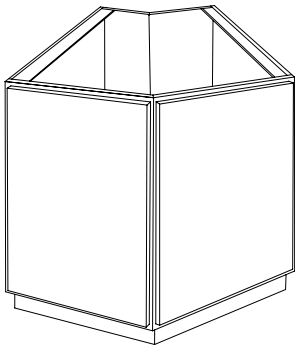

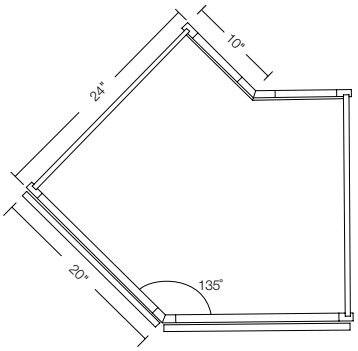

AOBC20

DESIGN CONSIDERATIONS

- 1 adjustable full depth shelf
- Allow 20" on both sides of the angle for installation
- 135°angle for 45° cabinet installation

HOW TO ORDER

- Pricing P-183

Block 4560 Angle End Base

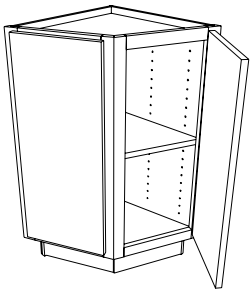

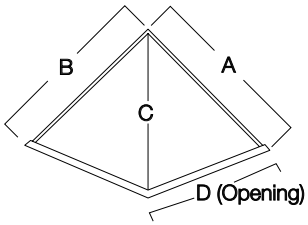

AEB18
AEB21
AEB24

DESIGN CONSIDERATIONS

34½" High - 24" Deep

- 1 adjustable full depth shelf
- Allow 18", 21" or 24" of wall space for installation
- Dimensions A and B must be the same when modifying
- Back panels are ½" veneer core plywood

HOW TO ORDER

- Pricing P-183

	A	B	C	D
AEB18	18"	18"	17¾"	10½"
AEB21	21"	21"	20¾"	12"
AEB24	24"	24"	23¾"	15"

NOTES/CAUTION

- Inset concealed hinges not available.

Block 4570 Angle Base

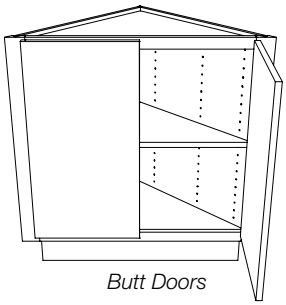

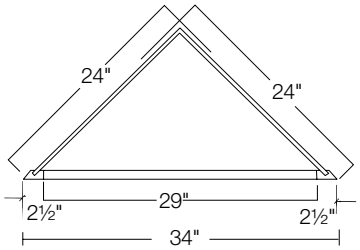

Butt Doors
2AB24

DESIGN CONSIDERATIONS

34½" High - 24" Deep

- 1 adjustable full depth shelf
- Corner dimensions must be the same when modifying
- Allow 24" of wall space for installation
- Back panels are ½" veneer core plywood

HOW TO ORDER

- Pricing P-183

NOTES/CAUTION

- Inset concealed hinges not available.

© Copyright StarMark Cabinetry MARCH 2021

Block 4575 Base Diagonal Wall

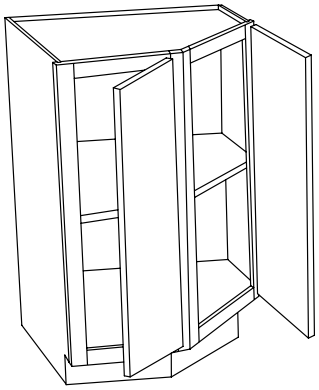

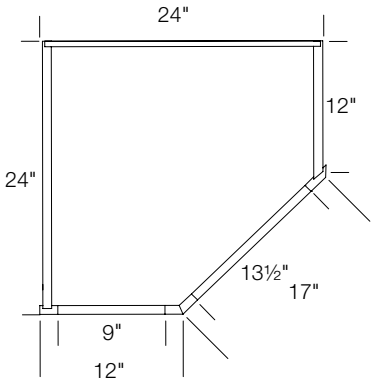

BDW24L
BDW24R

DESIGN CONSIDERATIONS

34½" High - 24" Deep

- 1 adjustable full depth shelf
- Allow 24" of wall space for installation
- Toe kick on same sides as doors

HOW TO ORDER

- Specify **L** or **R** hinging for both doors
- Nomenclature indicates end of run: L for Left, R for Right
- Illustration shows this cabinet at the right end of a run
- Pricing P-183

Block 4577 Base Angled Wall

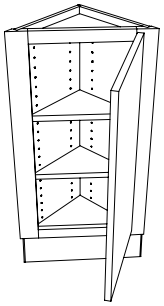

BAW1234

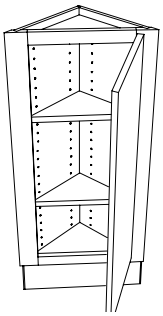

BTAW1240

DESIGN CONSIDERATIONS

34½", 40½" High - 12" Deep

- Two adjustable shelves
- Allow 12" of wall space for installation
- Back panels are ½" veneer core plywood

HOW TO ORDER

- Specify L or R hanging
- Pricing P-183

NOTES/CAUTION

- Inset concealed hinges not available.

Block 4578 Base Angled Corner

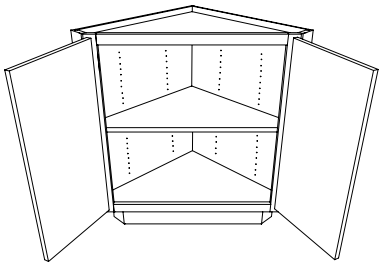

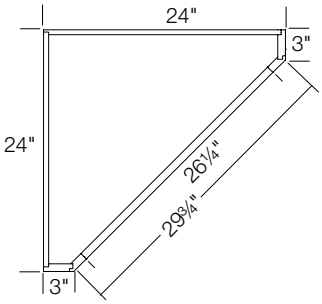

BAC24

DESIGN CONSIDERATIONS

34½" High - 24" Deep

- 1 adjustable full depth shelf
- Corner dimensions must be the same when modifying
- Allow 24" of wall space for installation
- Back panels are ½" veneer core plywood
- 3" end panels are flushed and finished

HOW TO ORDER

- Pricing P-184

© Copyright StarMark Cabinetry MARCH 2021

Block 4580 Base Angle Cabinet

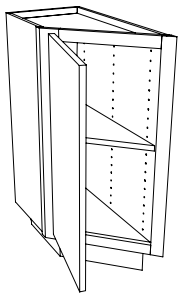

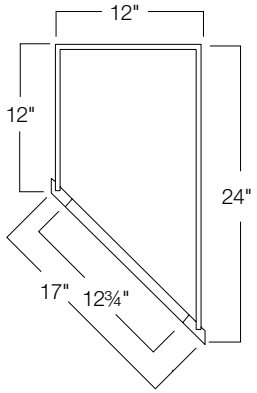

BAC12L
BAC12R

DESIGN CONSIDERATIONS

34½" High - 24" Deep

- 1 adjustable full depth shelf
- Toe kick on 12" deep side and front

HOW TO ORDER

- Specify **L** or **R** hinging
- Nomenclature indicates end of run: L for Left, R for Right
- Illustration shows this cabinet at the left end of a run
- Pricing P-184

Block 4595 Base Z Door

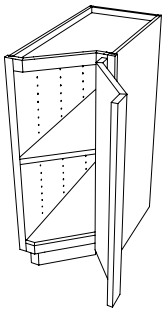

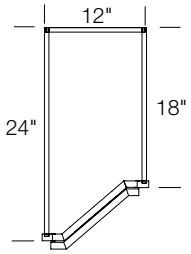

BZ12L
BZ12R

DESIGN CONSIDERATIONS

34½" High - 24" Deep

- 1 adjustable full depth shelf
- No modifications allowed
- Not available with Finger Routes or Bevel Pulls
- Not available with any Mullion or Insert door modifications.

HOW TO ORDER

- Nomenclature indicates end of run: L for Left, R for Right
- Left end of run is hinged left, right end of run is hinged right
- Illustration shows this cabinet at the right end of a run
- Not available in Tabor door styles
- Pricing P-184

Block 4600* Curved Out Base

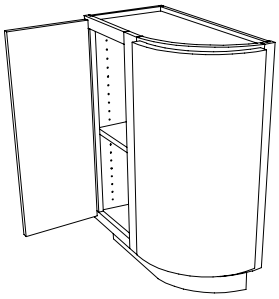

COB12L
COB12R

DESIGN CONSIDERATIONS

34½" High - 12" Wide - 12" Radius

- 1 adjustable full depth shelf
- Curved toe kick. See block 12200 for CTBT.
- Dimensional modifications not available

HOW TO ORDER

- Available in Accord, Aero, Alite, Breckenridge, Georgetown, Monroe, Tempo and Tudor
- Not available in Alder and Rustic Alder
- Nomenclature indicates end of run: L for Left, R for Right
- Illustration shows this cabinet at the left end of a run
- Cannot be placed on rush order
- Pricing P-184

* On select door styles only

© Copyright StarMark Cabinetry MARCH 2021

Block 4610* Curved Out Base

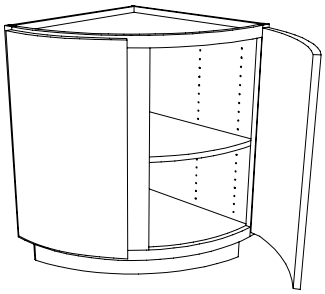

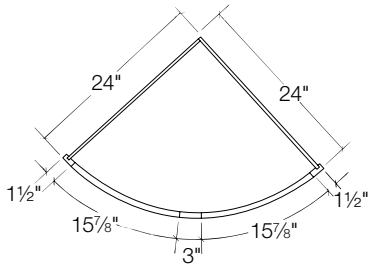

24" Radius
COB24

DESIGN CONSIDERATIONS

34½" High - 24" Radius

- 1 adjustable full depth shelf
- Curved toe kick. See block 12200 for CTBT.
- Dimensional modifications not available
- Back panels are ½" veneer core plywood

HOW TO ORDER

- Available in Accord, Aero, Alite, Breckenridge, Georgetown, Monroe, Tempo and Tudor
- Not available in Alder and Rustic Alder
- Cannot be placed on rush order
- Pricing P-184

* On select door styles only

Block 4620 Curved Out Base with Open Shelves

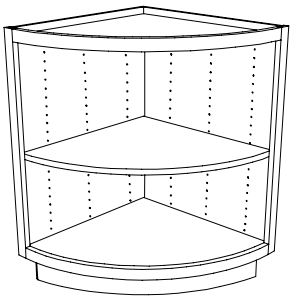

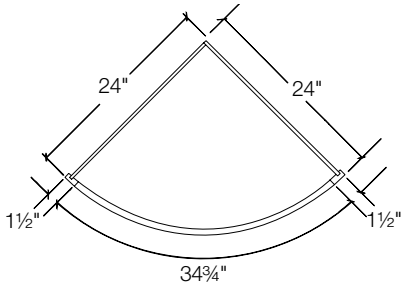

COXB24

DESIGN CONSIDERATIONS

34½" High - 24" Radius

- 1 adjustable full depth shelf
- Finished veneer interior
- Curved toe kick. See block 12200 for CTBT.
- Dimensional modifications not available
- Back panels are ½" veneer core plywood

HOW TO ORDER

- Cannot be placed on rush order
- Not available in Alder and Rustic Alder
- Pricing P-185

Block 4630 Open Shelf Wall Base

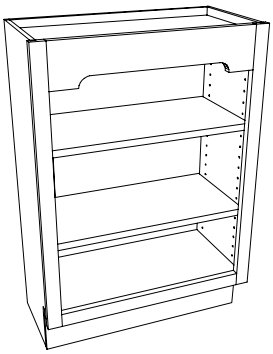

WBCF0934
WBCF1234
WBCF1534
WBCF1834
WBCF2134
WBCF2434
WBCF2734
WBCF3034
WBCF3334
WBCF3634

DESIGN CONSIDERATIONS

34½" High - 12" Deep

- Ogee edge on frame opening
- Finished veneer interior
- Arch valance is standard
- 2 adjustable full depth shelves

HOW TO ORDER

- Other valances are available. See block 9170 for Valance Top Rail options.
- Ogee edge on frame may be modified when certain Valances are specified. See HelpZone for information.
- Pricing P-185

© Copyright StarMark Cabinetry MARCH 2021

Block 4631 Open Shelf Wall Base with Beaded Back

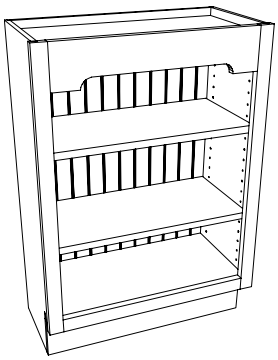

WBCF0934BB
WBCF1234BB
WBCF1534BB
WBCF1834BB
WBCF2134BB
WBCF2434BB
WBCF2734BB
WBCF3034BB
WBCF3334BB
WBCF3634BB

DESIGN CONSIDERATIONS

34½" High - 12" Deep

- Ogee edge on frame opening
- Finished veneer interior
- Arch valance is standard
- 2 adjustable full depth shelves
- Beaded Back

HOW TO ORDER

- Other valances are available. See block 9170 for Valance Top Rail options.
- Ogee edge on frame may be modified when certain Valances are specified. See HelpZone for information.
- Pricing P-185

Block 4700 Quarter Round Base End

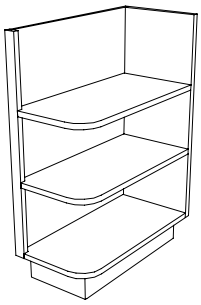

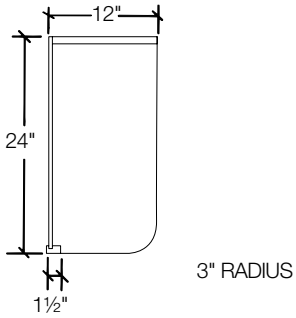

QRBEL
QRBER

DESIGN CONSIDERATIONS

34½" High

- To be used on end of cabinet run
- 3" radius shelf
- Uses 12" wall space
- Finished veneer interior

HOW TO ORDER

- Nomenclature indicates end of run: L for Left, R for Right
- Illustration shows this cabinet at the right end of a run
- Pricing P-186

Block 4710 Curved Round Base End

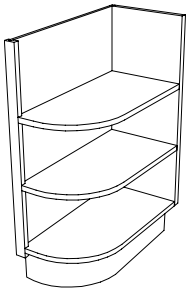

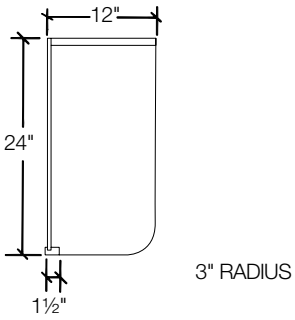

CRBEL
CRBER

DESIGN CONSIDERATIONS

34½" High

- 3" radius shelf
- Curved toe kick
- Finished toe kick is standard
- Uses 12" wall space
- Finished veneer interior

HOW TO ORDER

- Nomenclature indicates end of run: L for Left, R for Right
- Illustration shows this cabinet at the right end of a run
- Pricing P-186

© Copyright StarMark Cabinetry MARCH 2021

THIS PAGE INTENTIONALLY LEFT BLANK

© Copyright StarMark Cabinetry MARCH 2021

THIS PAGE INTENTIONALLY LEFT BLANK

© Copyright StarMark Cabinetry MARCH 2021

THIS PAGE INTENTIONALLY LEFT BLANK

© Copyright StarMark Cabinetry MARCH 2021

THIS PAGE INTENTIONALLY LEFT BLANK

© Copyright StarMark Cabinetry MARCH 2021

THIS PAGE INTENTIONALLY LEFT BLANK

© Copyright StarMark Cabinetry MARCH 2021

Index

Description	Nomenclature	Page
Angle End Utility	AEU	C-232
Broom Storage Base	BSB	C-213
Broom Storage Wall	BSW	C-211
Broom Storage Wall	BSW	C-212
Chef's Pantry with Drawers and Wood Turntables	CPDW	C-216
Chef's Pantry with Wood Turntables	CPW	C-215
Curved Out Utility	COU	C-232
Extra Wide Single Oven	OC	C-237
Extra Wide Single Oven Stacked	OCK	C-238
Flush Microwave and Single Oven	OCMFL	C-244
Flush Microwave and Single Oven with Warming Drawer	OCMWF	C-246
Flush Universal Oven	OCUFL	C-241
Microwave and Single Oven	OCSM	C-242
Microwave and Single Oven with Warming Drawer	OCSMW	C-243
Microwave and Single Oven Stacked	OSMK	C-245
Microwave Cook Center	MCC	C-247
Microwave Oven	OCM	C-247
Pantry Tall Walk Through	PTWT	C-229-231
Refrigerator Cabinet	RU	C-231
Single Oven	OCS	C-235
Single Oven Stacked	OCSK	C-236
Super Chef's Pantry with Drawers	SCPD	C-216
Super Chef's Pantry with Drawers and Wood Turntables	SCPDW	C-217
Super Chef's Pantry with Wood Turntables	SCPW	C-217
Tall Bookcase	CCFU	C-234
Universal Oven	OCU	C-239
Universal Oven Stacked	OCUK	C-240
Utility and Broom Combination	UBBS	C-214
Utility Base	UB	C-208
Utility Base Stacked	UBSK	C-209
Utility Base with Inverted Frame	UBIF	C-210
Utility Broom and Roll Tray Combination	URTBS	C-215
Utility Canned Goods Storage	UCS	C-220-221
Utility Diagonal Wall	UDW	C-233
Utility Pull Out Pantry	UPOP	C-224
Utility Pull Out Pantry with Soft Close	UPTYSC	C-222
Utility Stacked with Roll Out Trays	UKRT	C-219
Utility Wall	UW	C-205
Utility Wall Stacked	UWSK	C-206
Utility Wall with Inverted Frame	UWIF	C-207
Utility with Four Drawers	U4DB	C-228
Utility with One Drawer and Door Below Tall Door	U1DB	C-226
Utility with Roll Out Trays	UB__RT	C-218
Utility with Three Drawers	U3DB	C-227
Utility with Waste Bin	UKB	C-225
Wine Cube Utility	U__CUB	C-233

© Copyright StarMark Cabinetry MARCH 2021

Index

Description	Nomenclature	Page	Description	Nomenclature	Page

© Copyright StarMark Cabinetry MARCH 2021

Standards for Single Door Utility Cabinets

- ○ Depth is 12" for Utility Wall and 24" for Utility Base.
- ○ Vertical stiles on the cabinet frame are 1½" wide unless noted.
- ○ Horizontal rails on the cabinet frame are 1½" high and 3" high.
- ○ When arched door style is specified for order, arch on top doors only.
- ○ Toe kick height is 4".
- ○ Toe kick recess is 2⅝".
- ○ The opening of the top door varies for cabinets higher than 84".
- ○ The opening of the top door increases
  - 12" for 96" tall cabinet
  - 9" for 93" tall cabinet
  - 6" for 90" tall cabinet
  - 3" for 87" tall cabinet.
- ○ The opening decreases 3" for a 81" tall cabinet.
- ○ **Mortise and tenon doors greater than 42" high will have a center rail.**
- ○ Mitered doors that are 42" or higher will receive a single panel door.
- ○ To compute the door opening width on a **single door** utility cabinet, subtract 3" from cabinet width.

Standards for Double Door Utility Cabinets

- ○ Depth is 12" for Utility Wall and 24" for Utility Base.
- ○ Vertical stiles on the cabinet frame are 1½" wide unless noted.
- ○ Horizontal rails on the cabinet frame are 1½" high and 3" high.
- ○ Vertical center mullions are 3" wide.
- ○ Toe kick height is 4".
- ○ Toe kick recess is 2⅝".
- ○ The opening of the top door varies for cabinets higher than 84".
- ○ The opening of the top door increases
  - 12" for 96" tall cabinet
  - 9" for 93" tall cabinet
  - 6" for 90" tall cabinet
  - 3" for 87" tall cabinet.
- ○ The opening decreases 3" for a 81" tall cabinet.
- ○ A prefix of "2" denotes a cabinet built with butt doors. The cabinet is considered "full access" because there is no center mullion.
- ○ Butt doors are not available in cabinets that are wider than 36". Cabinets wider than 36" will have a fixed center mullion. A fixed center mullion is necessary for stability.
- ○ Butt door cabinets have full width drawers.
- ○ To compute the width of a door opening on a **Double Door** standard utility cabinet, subtract 6" from the individual width and divide by 2.
- ○ When arched door style is specified for order, arch on top doors only.
- ○ **Mortise and tenon doors greater than 42" high will have a center rail.**
- ○ Mitered doors that are 42" or higher will receive a single panel door.
- ○ To compute the width of a door opening on a **Butt Door** standard wall cabinet, subtract 3" from the individual width. Subtract 3" from the cabinet height to obtain the height opening.

Standards for Single Door Oven Cabinets

- ○ Depth is 24".
- ○ Vertical stiles on the cabinet frame are 1½" wide unless noted. They can be modified to 1" minimum in the cut-out area.
- ○ Horizontal rails on the cabinet frame are 1½" high or as noted.
- ○ Toe kick height is 4".
- ○ Toe kick recess is 2⅝".
- ○ See the specific oven cabinet section for additional information.
- ○ When arched door style is specified for order, arch on top doors only.
- ○ To compute the door/drawer opening width on a **single door** standard oven cabinet, subtract 3" from cabinet width.
- ✪ Appliance Templates <u>must</u> be filled out and sent with the order.

Standards for Double Door Oven Cabinets

- ○ Depth is 24".
- ○ Vertical stiles on the cabinet frame are 1½" wide unless noted. They can be modified to 1" minimum in the cut-out area.
- ○ Horizontal rails on the cabinet frame are 1½" high or as noted.
- ○ Vertical center mullions are 3" wide.
- ○ Toe kick height is 4".
- ○ Toe kick recess is 2⅝".
- ○ See the specific oven cabinet section for additional information.
- ○ A prefix of "2" denotes a cabinet built with butt doors. The cabinet is considered "full access" because there is no center mullion.
- ○ Butt doors are not available in cabinets that are wider than 36". Cabinets wider than 36" will have a fixed center mullion. A fixed center mullion is necessary for stability.
- ○ Butt door cabinets have full width drawers.
- ○ To compute the width of a door opening on a **Double Door** standard oven cabinet, subtract 6" from the individual width and divide by 2.
- ○ When arched door style is specified for order, arch on top doors only.
- ○ To compute the width of a door opening on a **Butt Door** standard wall cabinet, subtract 3" from the individual width. Subtract 3" from the cabinet height to obtain the height opening.
- ✪ Appliance Templates <u>must</u> be filled out and sent with the order.

© Copyright StarMark Cabinetry MARCH 2021

Utility/Oven Cabinet Frame Openings Alignment

This shows alignment for cabinets that are all 84" high. Alignment will vary when cabinets of these heights are used in an installation: 81", 87", 90", 93", and 96". Not all cabinets are available in all heights.

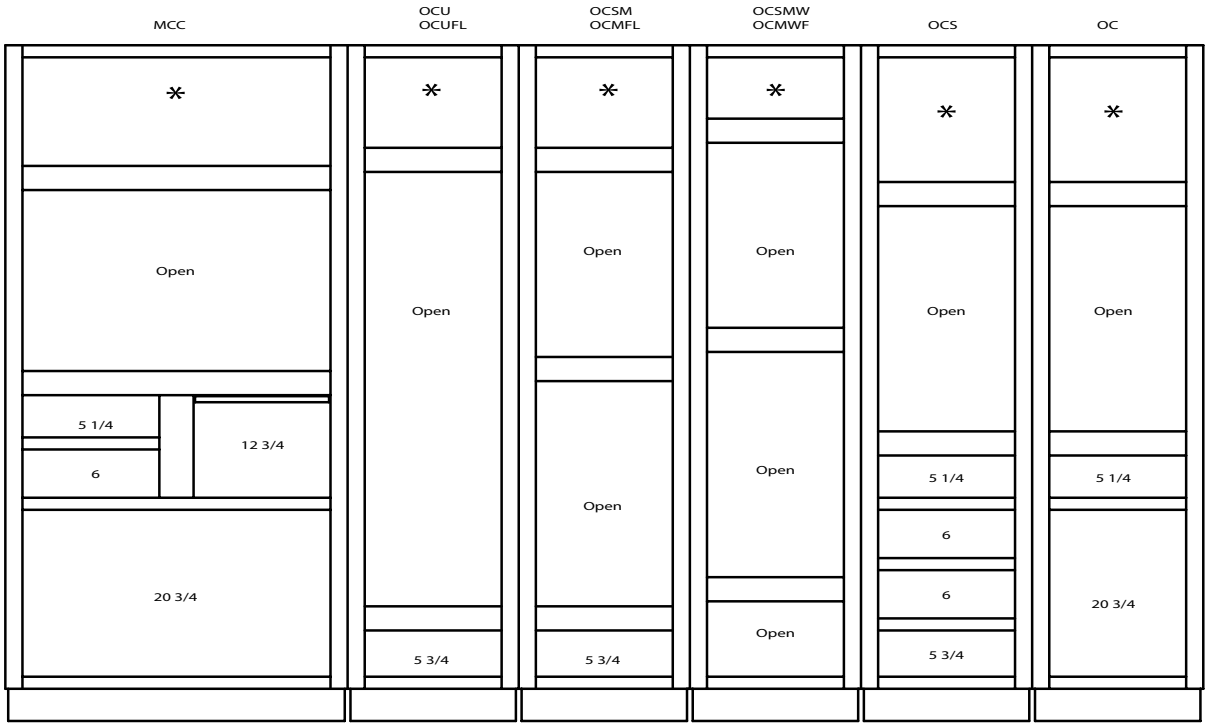

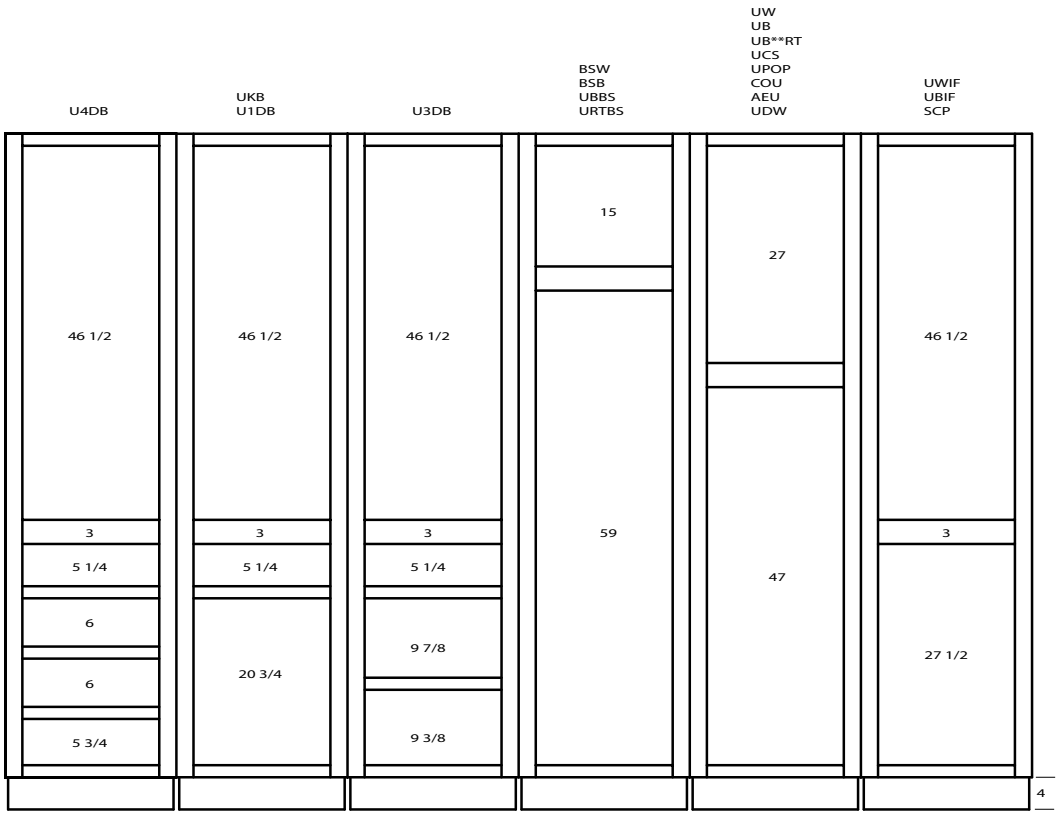

Maximum cutout width is 2" less than overall cabinet width

© Copyright StarMark Cabinetry MARCH 2021

Face Frame Dimensions for Utility Cabinets

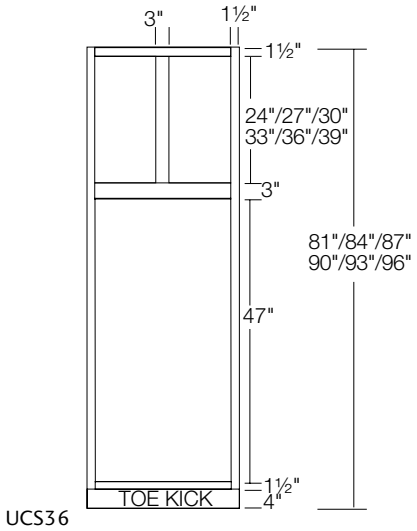

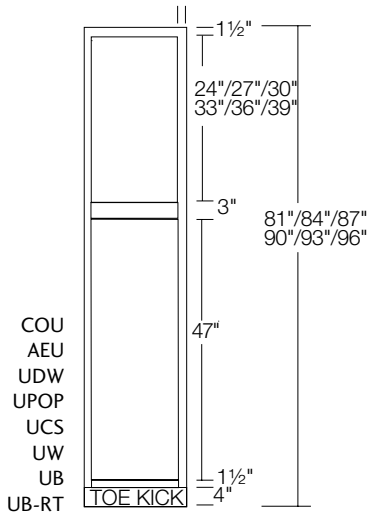

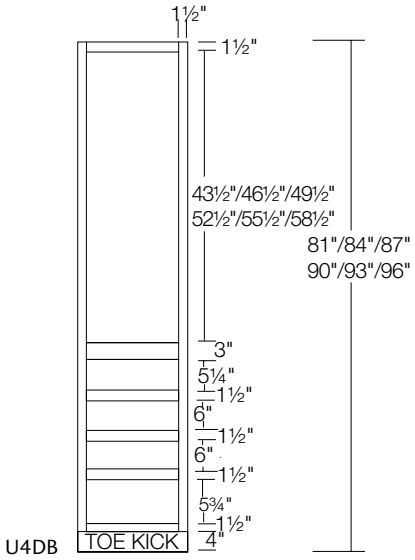

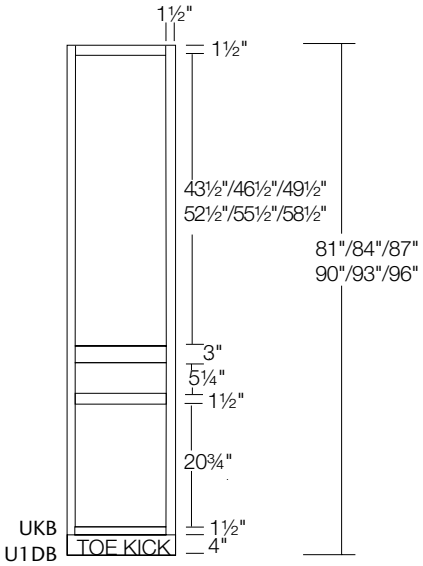

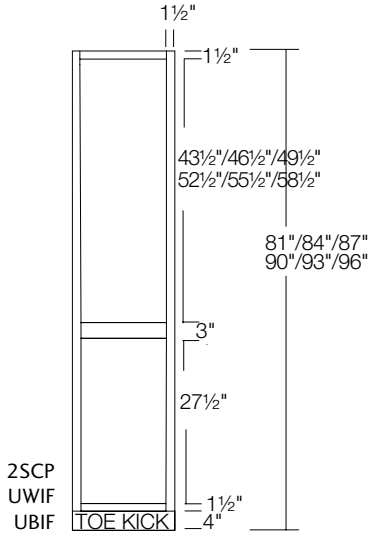

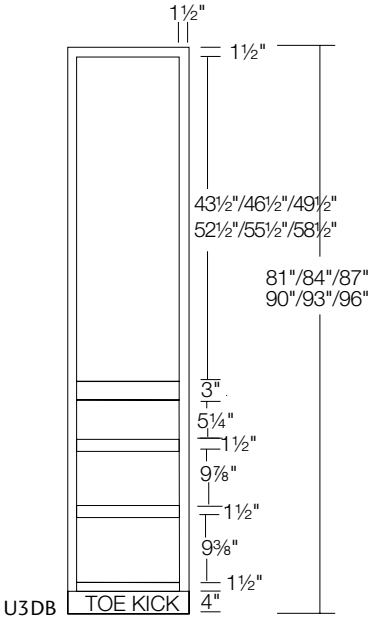

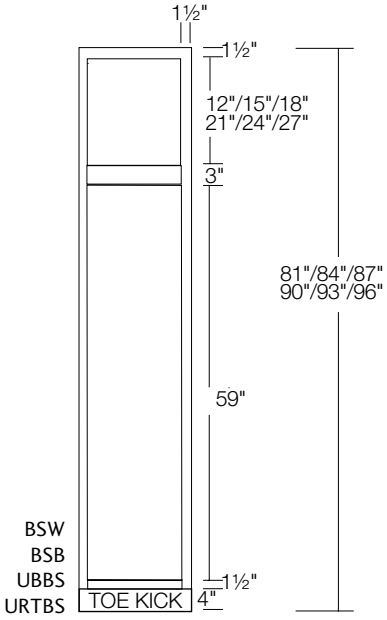

© Copyright StarMark Cabinetry MARCH 2021

Utility/Oven Stacked Cabinet Frame Openings Alignment

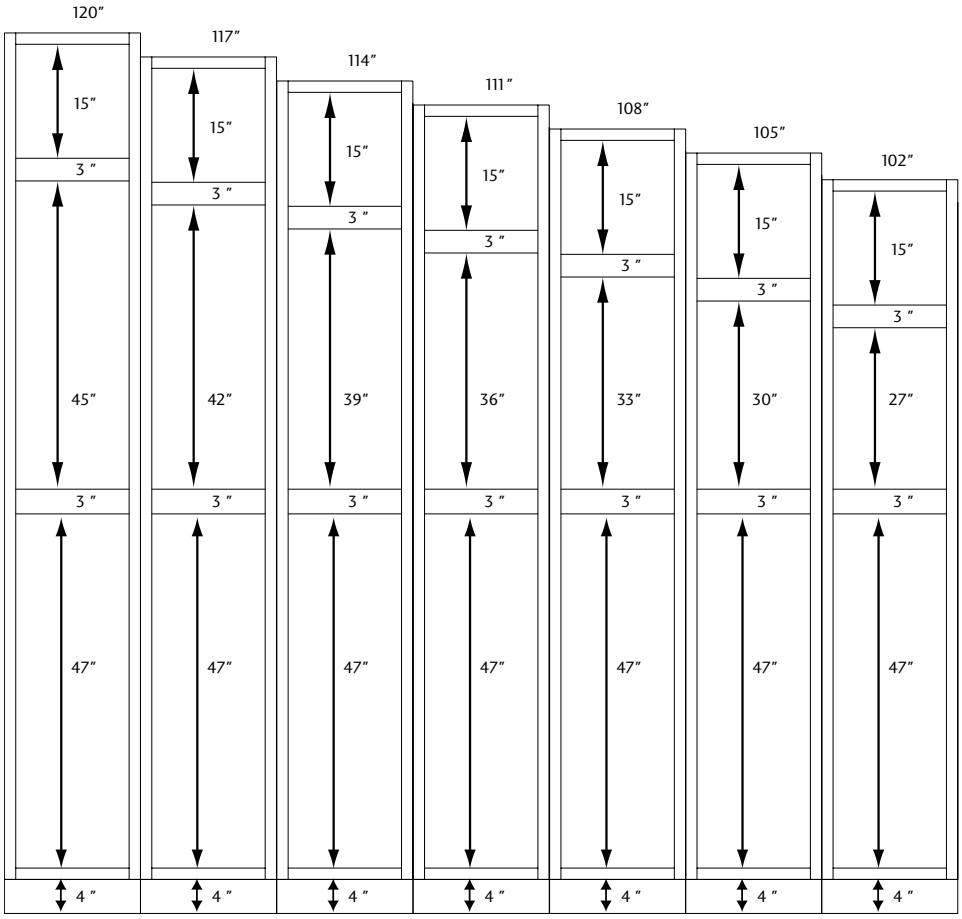

© Copyright StarMark Cabinetry MARCH 2021

Utility/Oven Cabinet Door and Drawer Alignment
Modern Overlay

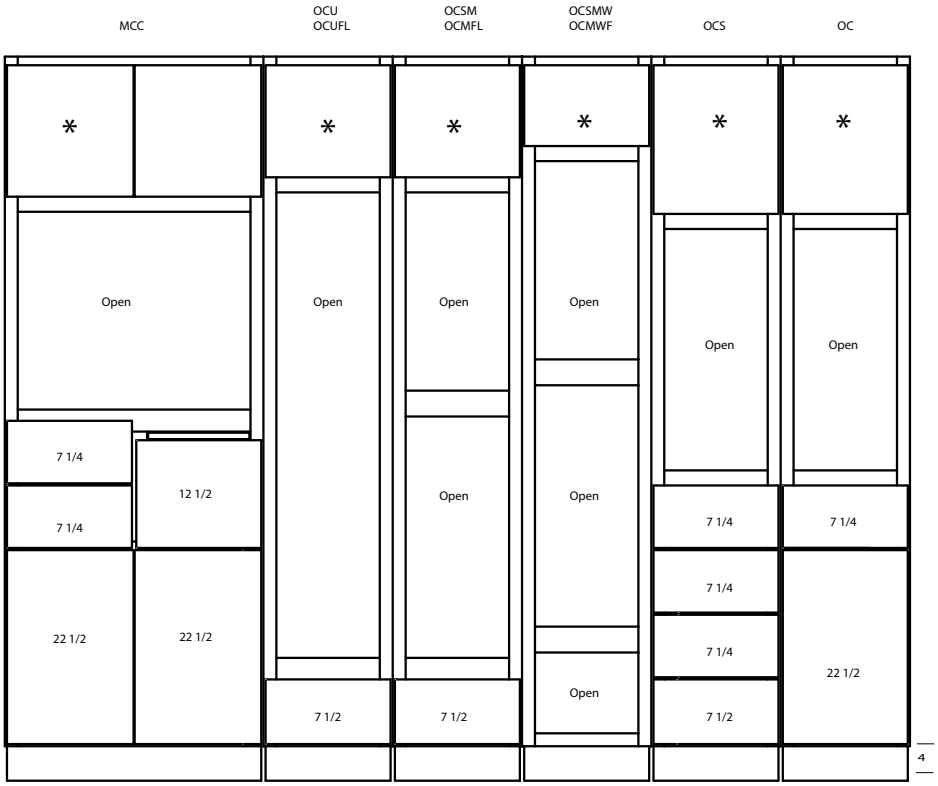

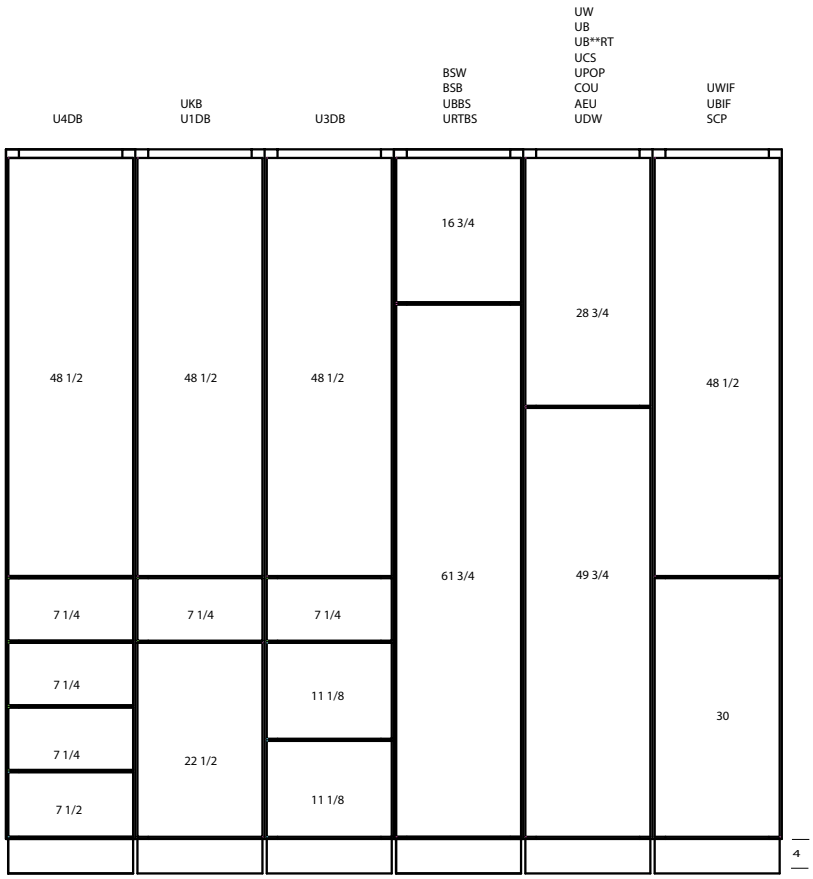

© Copyright StarMark Cabinetry MARCH 2021

Utility/Oven Cabinet Door and Drawer Alignment

Traditional Overlay

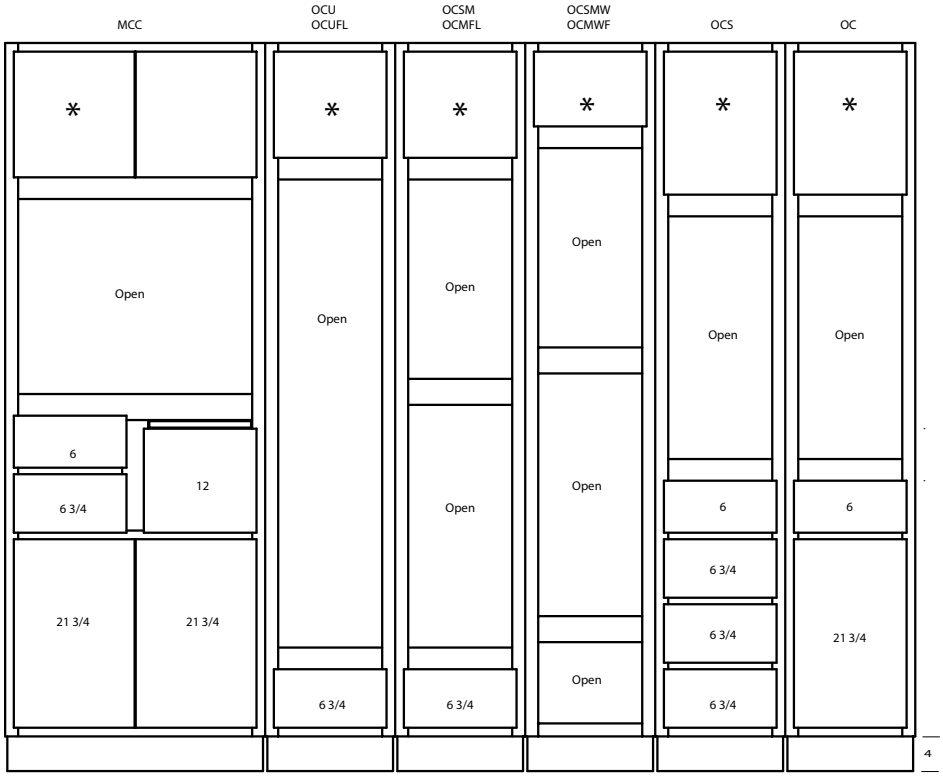

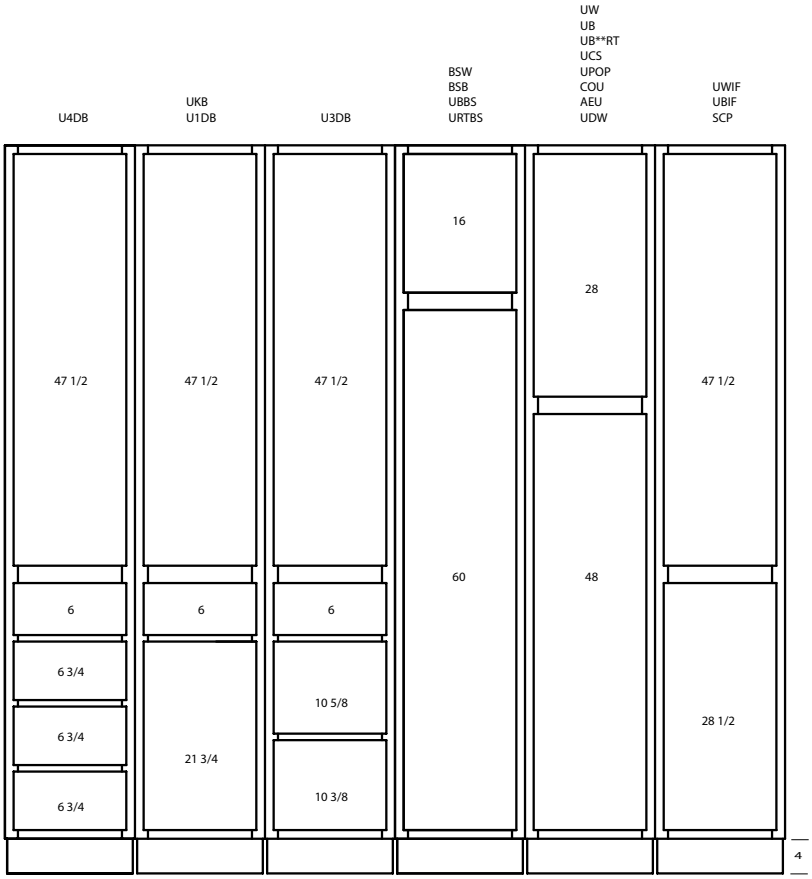

© Copyright StarMark Cabinetry MARCH 2021

Block 5000 Utility Wall

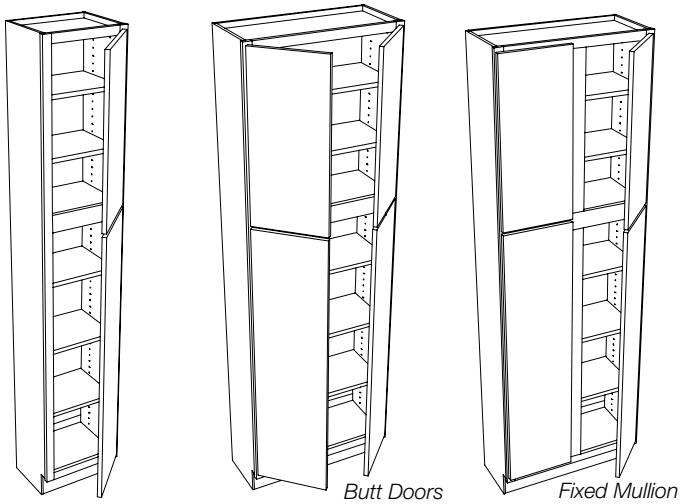

Single Door	Butt Doors	Fixed Mullion
UW1281	**2UW2481**	
UW1581	**2UW2781**	
UW1881	**2UW3081**	**UW3081**
UW2181	**2UW3381**	**UW3381**
UW2481	**2UW3681**	**UW3681**
UW1284	**2UW2484**	
UW1584	**2UW2784**	
UW1884	**2UW3084**	**UW3084**
UW2184	**2UW3384**	**UW3384**
UW2484	**2UW3684**	**UW3684**
UW1287	**2UW2487**	
UW1587	**2UW2787**	
UW1887	**2UW3087**	**UW3087**
UW2187	**2UW3387**	**UW3387**
UW2487	**2UW3687**	**UW3687**
UW1290	**2UW2490**	
UW1590	**2UW2790**	
UW1890	**2UW3090**	**UW3090**
UW2190	**2UW3390**	**UW3390**
UW2490	**2UW3690**	**UW3690**
UW1293	**2UW2493**	
UW1593	**2UW2793**	
UW1893	**2UW3093**	**UW3093**
UW2193	**2UW3393**	**UW3393**
UW2493	**2UW3693**	**UW3693**
UW1296	**2UW2496**	
UW1596	**2UW2796**	
UW1896	**2UW3096**	**UW3096**
UW2196	**2UW3396**	**UW3396**
UW2496	**2UW3696**	**UW3696**

DESIGN CONSIDERATIONS

81", 84", 87", 90", 93", 96" High - 12" Deep

- 47" lower opening has 3 adjustable shelves. The number of additional shelves supplied is based on cabinet height. See the chart below.
- The toe kick for 96" high cabinet is sent loose. Please specify in your order if you want the toe kick factory applied.
- Mortise and tenon doors greater than 42" high will have a center rail.

Cabinet Height*	Number of shelves**	Height of Upper Portion
81"	2	24"
84"	2	27"
87"	2	30"
90"	2	33"
93"	3	36"
96"	3	39"

* At all heights, this cabinet was designed to align with adjoining wall cabinets.

** These shelves are in addition to the 3 in the lower opening.

HOW TO ORDER

- Specify **L** or **R** hinging on Single Door cabinet
- Pricing P-189-190

INSTALLATION TIP

On 96" high units, stand unit up then slide toe kick in from the back and slide against the wall at the same time. Note that the toe kick will be narrower than the cabinet's overall width, allowing for a recessed toe on one side.

© Copyright StarMark Cabinetry MARCH 2021

Block 5001 Utility Wall Stacked

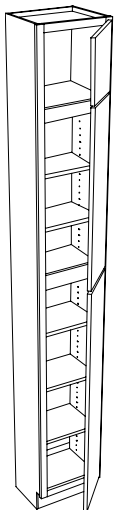

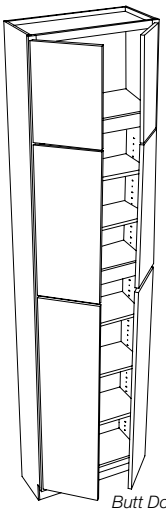

Butt Doors

Single Door	Butt Doors
UWSK12102	**2UWSK24102**
UWSK15102	**2UWSK27102**
UWSK18102	**2UWSK30102**
UWSK21102	**2UWSK33102**
UWSK24102	**2UWSK36102**
UWSK12105	**2UWSK24105**
UWSK15105	**2UWSK27105**
UWSK18105	**2UWSK30105**
UWSK21105	**2UWSK33105**
UWSK24105	**2UWSK36105**
UWSK12108	**2UWSK24108**
UWSK15108	**2UWSK27108**
UWSK18108	**2UWSK30108**
UWSK21108	**2UWSK33108**
UWSK24108	**2UWSK36108**
UWSK12111	**2UWSK24111**
UWSK15111	**2UWSK27111**
UWSK18111	**2UWSK30111**
UWSK21111	**2UWSK33111**
UWSK24111	**2UWSK36111**
UWSK12114	**2UWSK24114**
UWSK15114	**2UWSK27114**
UWSK18114	**2UWSK30114**
UWSK21114	**2UWSK33114**
UWSK24114	**2UWSK36114**
UWSK12117	**2UWSK24117**
UWSK15117	**2UWSK27117**
UWSK18117	**2UWSK30117**
UWSK21117	**2UWSK33117**
UWSK24117	**2UWSK36117**
UWSK12120	**2UWSK24120**
UWSK15120	**2UWSK27120**
UWSK18120	**2UWSK30120**
UWSK21120	**2UWSK33120**
UWSK24120	**2UWSK36120**

DESIGN CONSIDERATIONS

102", 105", 108", 111", 114", 117", 120" High - 12" Deep

- 47" lower opening has 3 adjustable shelves. The number of additional shelves supplied is based on cabinet height. See the chart below.
- The toe kick is sent loose. Please specify on your order if you want the toe kick factory applied.

Cabinet Height	Number of shelves	Height of Middle Portion
102"	2	27"
105"	2	30"
108"	2	33"
111"	3	36"
114"	3	39"
117"	3	42"
120"	3	45"

HOW TO ORDER

- Specify **L** or **R** hinging on Single Door cabinet
- Pricing P-191-192

© Copyright StarMark Cabinetry MARCH 2021

Block 5002 Utility Wall with Inverted Frame

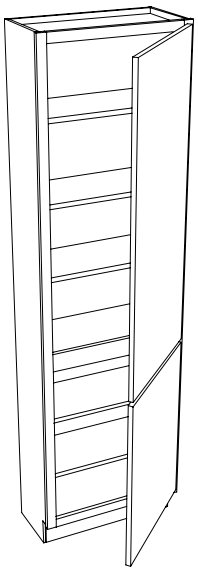

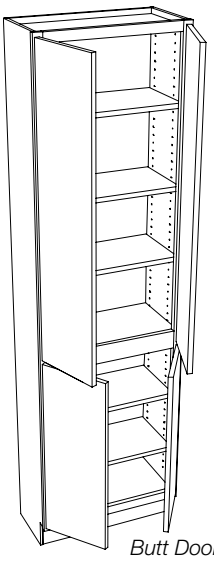

Butt Doors

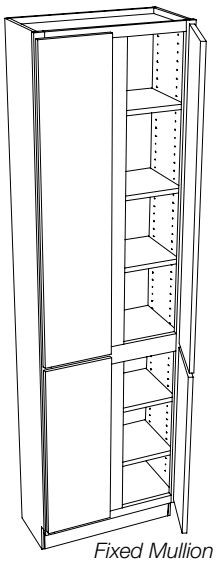

Fixed Mullion

Single Door	Butt Doors	Fixed Mullion
UWIF1281	**2UWIF2481**	
UWIF1581	**2UWIF2781**	
UWIF1881	**2UWIF3081**	**UWIF3081**
UWIF2181	**2UWIF3381**	**UWIF3381**
UWIF2481	**2UWIF3681**	**UWIF3681**
UWIF1284	**2UWIF2484**	
UWIF1584	**2UWIF2784**	
UWIF1884	**2UWIF3084**	**UWIF3084**
UWIF2184	**2UWIF3384**	**UWIF3384**
UWIF2484	**2UWIF3684**	**UWIF3684**
UWIF1287	**2UWIF2487**	
UWIF1587	**2UWIF2787**	
UWIF1887	**2UWIF3087**	**UWIF3087**
UWIF2187	**2UWIF3387**	**UWIF3387**
UWIF2487	**2UWIF3687**	**UWIF3687**
UWIF1290	**2UWIF2490**	
UWIF1590	**2UWIF2790**	
UWIF1890	**2UWIF3090**	**UWIF3090**
UWIF2190	**2UWIF3390**	**UWIF3390**
UWIF2490	**2UWIF3690**	**UWIF3690**
UWIF1293	**2UWIF2493**	
UWIF1593	**2UWIF2793**	
UWIF1893	**2UWIF3093**	**UWIF3093**
UWIF2193	**2UWIF3393**	**UWIF3393**
UWIF2493	**2UWIF3693**	**UWIF3693**
UWIF1296	**2UWIF2496**	
UWIF1596	**2UWIF2796**	
UWIF1896	**2UWIF3096**	**UWIF3096**
UWIF2196	**2UWIF3396**	**UWIF3396**
UWIF2496	**2UWIF3696**	**UWIF3696**

DESIGN CONSIDERATIONS

81", 84", 87", 90", 93", 96" High - 12" Deep

- 27½" lower opening has 2 adjustable shelves. The number of additional shelves supplied is based on cabinet height. See the chart below.
- The toe kick for 96" high cabinet is sent loose. Please specify in your order if you want the toe kick factory applied.
- Mortise and tenon doors greater than 42" high will have a center rail.

Cabinet Height	Number of shelves**	Height of Upper Portion
81"	3	43½"
84"	3	46½"
87"	4	49½"
90"	4	52½"
93"	4	55½"
96"	5	58½"

** These shelves are in addition to the 2 in the lower opening.

HOW TO ORDER

- Specify **L** or **R** hinging on Single Door cabinet
- Pricing P-193-194

INSTALLATION TIP

On 96" high units, stand unit up then slide toe kick in from the back and slide against the wall at the same time. Note that the toe kick will be narrower than the cabinet's overall width, allowing for a recessed toe on one side.

© Copyright StarMark Cabinetry MARCH 2021

Block 5010 Utility Base

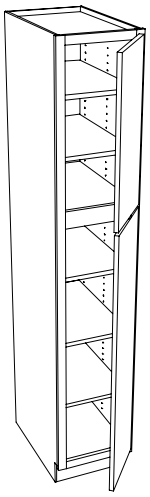

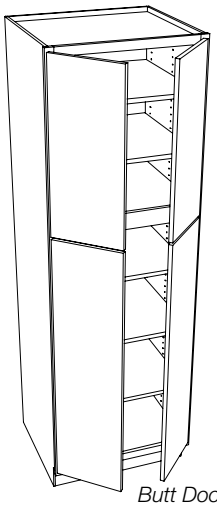

Butt Doors

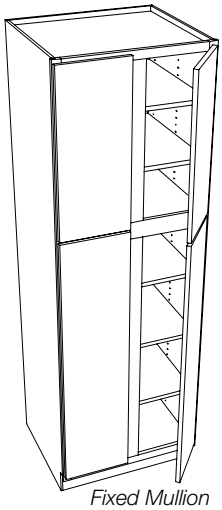

Fixed Mullion

Single Door	Butt Doors	Fixed Mullion
UB1281	**2UB2481**	
UB1581	**2UB2781**	
UB1881	**2UB3081**	**UB3081**
UB2181	**2UB3381**	**UB3381**
UB2481	**2UB3681**	**UB3681**
UB1284	**2UB2484**	
UB1584	**2UB2784**	
UB1884	**2UB3084**	**UB3084**
UB2184	**2UB3384**	**UB3384**
UB2484	**2UB3684**	**UB3684**
UB1287	**2UB2487**	
UB1587	**2UB2787**	
UB1887	**2UB3087**	**UB3087**
UB2187	**2UB3387**	**UB3387**
UB2487	**2UB3687**	**UB3687**
UB1290	**2UB2490**	
UB1590	**2UB2790**	
UB1890	**2UB3090**	**UB3090**
UB2190	**2UB3390**	**UB3390**
UB2490	**2UB3690**	**UB3690**
UB1293	**2UB2493**	
UB1593	**2UB2793**	
UB1893	**2UB3093**	**UB3093**
UB2193	**2UB3393**	**UB3393**
UB2493	**2UB3693**	**UB3693**
UB1296	**2UB2496**	
UB1596	**2UB2796**	
UB1896	**2UB3096**	**UB3096**
UB2196	**2UB3396**	**UB3396**
UB2496	**2UB3696**	**UB3696**

DESIGN CONSIDERATIONS

81", 84", 87", 90", 93", 96" High - 24" Deep

- 47" lower opening has 3 adjustable shelves. The number of additional shelves supplied is based on cabinet height. See the chart below.
- The toe kick for 96" high cabinet is sent loose. Please specify in your order if you want the toe kick factory applied.
- Mortise and tenon doors greater than 42" high will have a center rail.

Cabinet Height*	Number of shelves**	Height of Upper Portion
81"	2	24"
84"	2	27"
87"	2	30"
90"	2	33"
93"	3	36"
96"	3	39"

* At all heights, this cabinet was designed to align with adjoining wall cabinets.

** These shelves are in addition to the 3 in the lower opening.

HOW TO ORDER

- Specify **L** or **R** hinging on Single Door cabinet
- Pricing P-195-196

INSTALLATION TIP

On 96" high units, stand unit up then slide toe kick in from the back and slide against the wall at the same time. Note that the toe kick will be narrower than the cabinet's overall width, allowing for a recessed toe on one side.

© Copyright StarMark Cabinetry MARCH 2021

Block 5011 Utility Base Stacked

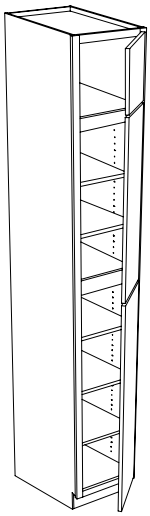

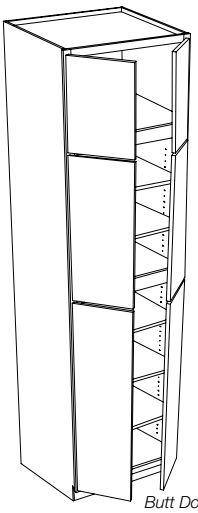

Butt Doors

Single Door	Butt Doors
UBSK12102	**2UBSK24102**
UBSK15102	**2UBSK27102**
UBSK18102	**2UBSK30102**
UBSK21102	**2UBSK33102**
UBSK24102	**2UBSK36102**
UBSK12105	**2UBSK24105**
UBSK15105	**2UBSK27105**
UBSK18105	**2UBSK30105**
UBSK21105	**2UBSK33105**
UBSK24105	**2UBSK36105**
UBSK12108	**2UBSK24108**
UBSK15108	**2UBSK27108**
UBSK18108	**2UBSK30108**
UBSK21108	**2UBSK33108**
UBSK24108	**2UBSK36108**
UBSK12111	**2UBSK24111**
UBSK15111	**2UBSK27111**
UBSK18111	**2UBSK30111**
UBSK21111	**2UBSK33111**
UBSK24111	**2UBSK36111**
UBSK12114	**2UBSK24114**
UBSK15114	**2UBSK27114**
UBSK18114	**2UBSK30114**
UBSK21114	**2UBSK33114**
UBSK24114	**2UBSK36114**
UBSK12117	**2UBSK24117**
UBSK15117	**2UBSK27117**
UBSK18117	**2UBSK30117**
UBSK21117	**2UBSK33117**
UBSK24117	**2UBSK36117**
UBSK12120	**2UBSK24120**
UBSK15120	**2UBSK27120**
UBSK18120	**2UBSK30120**
UBSK21120	**2UBSK33120**
UBSK24120	**2UBSK36120**

DESIGN CONSIDERATIONS

102", 105", 108", 111", 114", 117", 120" High - 24" Deep

- 47" lower opening has 3 adjustable shelves. The number of additional shelves supplied is based on cabinet height. See the chart below.
- The toe kick is sent loose. Please specify on your order if you want the toe kick factory applied.

Cabinet Height	Number of shelves	Height of Middle Portion
102"	2	27"
105"	2	30"
108"	2	33"
111"	3	36"
114"	3	39"
117"	3	42"
120"	3	45"

.

HOW TO ORDER

- Specify **L** or **R** hinging on Single Door cabinet
- Pricing P-197-198

© Copyright StarMark Cabinetry MARCH 2021

Block 5012 Utility Base with Inverted Frame

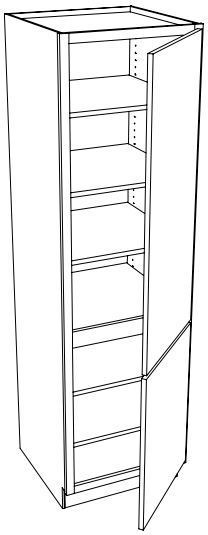

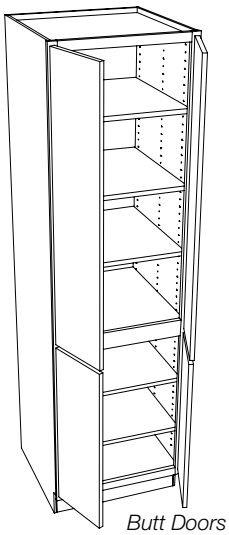

Butt Doors

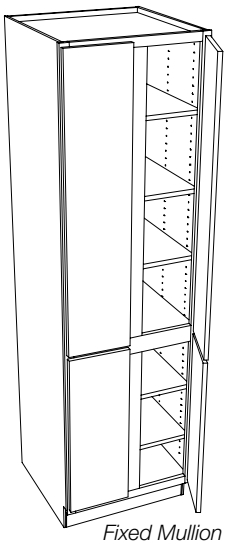

Fixed Mullion

Single Door	Butt Doors	Fixed Mullion
UBIF1281	**2UBIF2481**	
UBIF1581	**2UBIF2781**	
UBIF1881	**2UBIF3081**	**UBIF3081**
UBIF2181	**2UBIF3381**	**UBIF3381**
UBIF2481	**2UBIF3681**	**UBIF3681**
UBIF1284	**2UBIF2484**	
UBIF1584	**2UBIF2784**	
UBIF1884	**2UBIF3084**	**UBIF3084**
UBIF2184	**2UBIF3384**	**UBIF3384**
UBIF2484	**2UBIF3684**	**UBIF3684**
UBIF1287	**2UBIF2487**	
UBIF1587	**2UBIF2787**	
UBIF1887	**2UBIF3087**	**UBIF3087**
UBIF2187	**2UBIF3387**	**UBIF3387**
UBIF2487	**2UBIF3687**	**UBIF3687**
UBIF1290	**2UBIF2490**	
UBIF1590	**2UBIF2790**	
UBIF1890	**2UBIF3090**	**UBIF3090**
UBIF2190	**2UBIF3390**	**UBIF3390**
UBIF2490	**2UBIF3690**	**UBIF3690**
UBIF1293	**2UBIF2493**	
UBIF1593	**2UBIF2793**	
UBIF1893	**2UBIF3093**	**UBIF3093**
UBIF2193	**2UBIF3393**	**UBIF3393**
UBIF2493	**2UBIF3693**	**UBIF3693**
UBIF1296	**2UBIF2496**	
UBIF1596	**2UBIF2796**	
UBIF1896	**2UBIF3096**	**UBIF3096**
UBIF2196	**2UBIF3396**	**UBIF3396**
UBIF2496	**2UBIF3696**	**UBIF3696**

DESIGN CONSIDERATIONS

81", 84", 87", 90", 93", 96" High - 24" Deep

- 27½" lower opening has 2 adjustable shelves. The number of additional shelves supplied is based on cabinet height. See the chart below.
- The toe kick for 96" high cabinet is sent loose. Please specify in your order if you want the toe kick factory applied.
- Mortise and tenon doors greater than 42" high will have a center rail.

Cabinet Height	Number of shelves**	Height of Upper Portion
81"	3	43½"
84"	3	46½"
87"	4	49½"
90"	4	52½"
93"	4	55½"
96"	5	58½"

** These shelves are in addition to the 2 in the lower opening.

HOW TO ORDER

- Specify **L** or **R** hinging on Single Door cabinet
- Pricing P-199-200

INSTALLATION TIP

On 96" high units, stand unit up then slide toe kick in from the back and slide against the wall at the same time. Note that the toe kick will be narrower than the cabinet's overall width, allowing for a recessed toe on one side.

© Copyright StarMark Cabinetry MARCH 2021

Block 5018 Broom Storage Wall

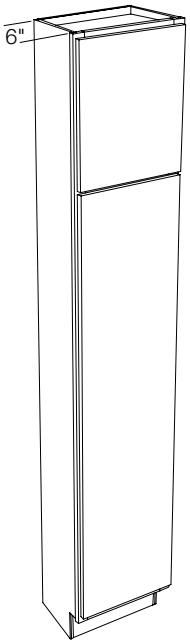

BSW158106	**BSW158706**	**BSW159306**
BSW188106	**BSW188706**	**BSW189306**
BSW218106	**BSW218706**	**BSW219306**
BSW248106	**BSW248706**	**BSW249306**
BSW158406	**BSW159006**	**BSW159606**
BSW188406	**BSW189006**	**BSW189606**
BSW218406	**BSW219006**	**BSW219606**
BSW248406	**BSW249006**	**BSW249606**

DESIGN CONSIDERATIONS

81", 84", 87", 90", 93", 96" High - 6" Deep

- Shelves not included - see block 10040
- 59" high lower opening
- The toe kick for 96" high cabinet is sent loose. Please specify in your order if you want the toe kick factory applied.
- Mortise and tenon doors greater than 42" high will have a center rail.

HOW TO ORDER

- Specify **L** or **R** hinging
- Pricing P-201

INSTALLATION TIP

On 96" high units, stand unit up then slide toe kick in from the back and slide against the wall at the same time. Note that the toe kick will be narrower than the cabinet's overall width, allowing for a recessed toe on one side.

© Copyright StarMark Cabinetry MARCH 2021

Block 5020 Broom Storage Wall

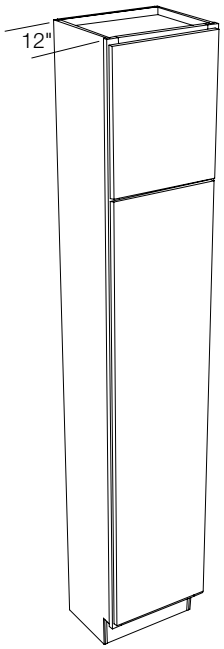

DESIGN CONSIDERATIONS

81", 84", 87", 90", 93", 96" High - 12" Deep

- Shelves not included - see block 10040
- 59" high lower opening
- The toe kick for 96" high cabinet is sent loose. Please specify in your order if you want the toe kick factory applied.
- Mortise and tenon doors greater than 42" high will have a center rail.

HOW TO ORDER

- Specify **L** or **R** hinging
- Pricing P-202

INSTALLATION TIP

On 96" high units, stand unit up then slide toe kick in from the back and slide against the wall at the same time. Note that the toe kick will be narrower than the cabinet's overall width, allowing for a recessed toe on one side.

BSW1281	**BSW1287**	**BSW1293**
BSW1581	**BSW1587**	**BSW1593**
BSW1881	**BSW1887**	**BSW1893**
BSW2181	**BSW2187**	**BSW2193**
BSW2481	**BSW2487**	**BSW2493**
BSW1284	**BSW1290**	**BSW1296**
BSW1584	**BSW1590**	**BSW1596**
BSW1884	**BSW1890**	**BSW1896**
BSW2184	**BSW2190**	**BSW2196**
BSW2484	**BSW2490**	**BSW2496**

© Copyright StarMark Cabinetry MARCH 2021

Block 5030 Broom Storage Base

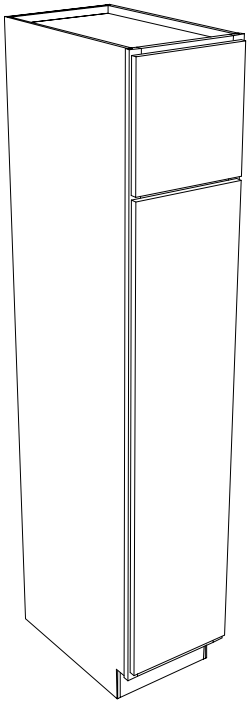

BSB1281	**BSB1290**
BSB1581	**BSB1590**
BSB1881	**BSB1890**
BSB2181	**BSB2190**
BSB2481	**BSB2490**
BSB1284	**BSB1293**
BSB1584	**BSB1593**
BSB1884	**BSB1893**
BSB2184	**BSB2193**
BSB2484	**BSB2493**
BSB1287	**BSB1296**
BSB1587	**BSB1596**
BSB1887	**BSB1896**
BSB2187	**BSB2196**
BSB2487	**BSB2496**

DESIGN CONSIDERATIONS

81", 84", 87", 90", 93", 96" High - 24" Deep

- Shelves not included - see block 10040
- 59" high lower opening
- The toe kick for 96" high cabinet is sent loose. Please specify in your order if you want the toe kick factory applied.
- Mortise and tenon doors greater than 42" high will have a center rail.

HOW TO ORDER

- Specify **L** or **R** hinging
- Pricing P-203

INSTALLATION TIP

On 96" high units, stand unit up then slide toe kick in from the back and slide against the wall at the same time. Note that the toe kick will be narrower than the cabinet's overall width, allowing for a recessed toe on one side.

© Copyright StarMark Cabinetry MARCH 2021

Block 5031 Utility and Broom Combination

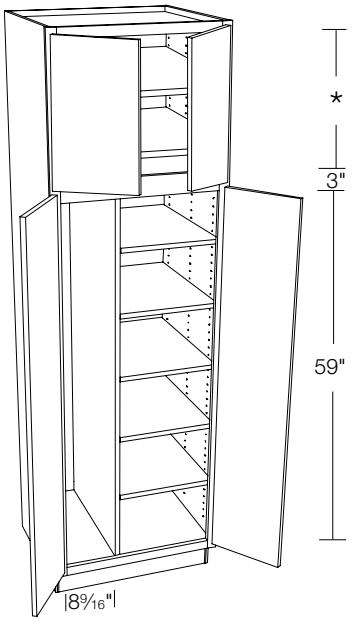

Butt Doors	Butt Doors
2UBBS3081	**2UBBS3090**
2UBBS3381	**2UBBS3390**
2UBBS3681	**2UBBS3690**
2UBBS3084	**2UBBS3093**
2UBBS3384	**2UBBS3393**
2UBBS3684	**2UBBS3693**
2UBBS3087	**2UBBS3096**
2UBBS3387	**2UBBS3396**
2UBBS3687	**2UBBS3696**

DESIGN CONSIDERATIONS

81", 84", 87", 90", 93", 96" High - 24" Deep

- No shelves or shelf holes in broom storage area
- 59" lower opening has 5 adjustable shelves. The number of additional shelves supplied is based on cabinet height. See chart.
- The toe kick for 96" high cabinet is sent loose. Please specify in your order if you want the toe kick factory applied.
- Mortise and tenon doors greater than 42" high will have a center rail.

HOW TO ORDER

- Broom storage is on left unless your order specifies right.
- Pricing P-204

INSTALLATION TIP

On 96" high units, stand unit up then slide toe kick in from the back and slide against the wall at the same time. Note that the toe kick will be narrower than the cabinet's overall width, allowing for a recessed toe on one side.

Cabinet Height	Number of shelves**	Height of Upper Portion*
81"	0	12"
84"	0	15"
87"	1	18"
90"	1	21"
93"	2	24"
96"	2	27"

** These shelves are in addition to the 5 in the lower opening.

© Copyright StarMark Cabinetry MARCH 2021

Block 5032 Utility Broom and Roll Tray Combination

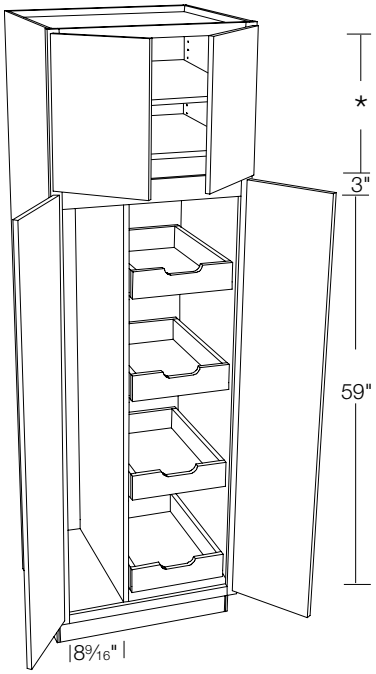

Butt Doors	Butt Doors
2URTBS3081	**2URTBS3090**
2URTBS3381	**2URTBS3390**
2URTBS3681	**2URTBS3690**
2URTBS3084	**2URTBS3093**
2URTBS3384	**2URTBS3393**
2URTBS3684	**2URTBS3693**
2URTBS3087	**2URTBS3096**
2URTBS3387	**2URTBS3396**
2URTBS3687	**2URTBS3696**

DESIGN CONSIDERATIONS

81", 84", 87", 90", 93", 96" High - 24" Deep

- No shelves or shelf holes in broom storage area
- Four adjustable roll out trays
- 59" high lower opening
- The toe kick for 96" high cabinet is sent loose. Please specify in your order if you want the toe kick factory applied.
- Adjustable shelves in upper area. See chart.
- Mortise and tenon doors greater than 42" high will have a center rail.

HOW TO ORDER

- Broom storage is on left unless your order specifies right.
- Pricing P-205

INSTALLATION TIP

On 96" high units, stand unit up then slide toe kick in from the back and slide against the wall at the same time. Note that the toe kick will be narrower than the cabinet's overall width, allowing for a recessed toe on one side.

Cabinet Height	Number of shelves	Height of Upper Portion*
81"	0	12"
84"	0	15"
87"	1	18"
90"	1	21"
93"	2	24"
96"	2	27"

Block 5101 Chef's Pantry with Wood Turntables

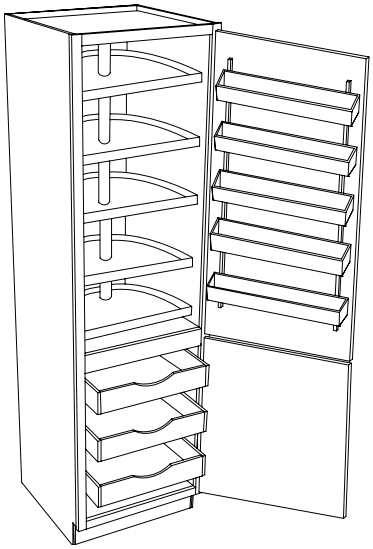

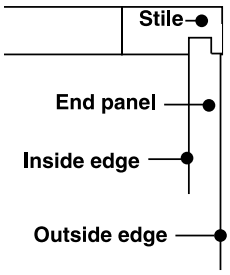

CPW2481	**CPW2490**
CPW2484	**CPW2493**
CPW2487	**CPW2496**

DESIGN CONSIDERATIONS

81", 84", 87", 90", 93", 96" High - 24" Deep

- Five 20" diameter wood turntables
- 5 adjustable wood door shelves
- Door shelves are field installed
- Door shelves are 20" wide
- 3 adjustable roll out trays
- The toe kick for 96" high cabinet is sent loose. Please specify in your order if you want the toe kick factory applied.
- Cabinet cannot be reduced in depth or width
- Cabinets greater than 90" in height receive a fixed shelf in the upper opening. The opening below the fixed shelf is 47".
- End panels are shifted to outside frame edge, eliminating ¼" reveal. End panels are not flush. See detail.
- Mortise and tenon doors greater than 42" high will have a center rail.

HOW TO ORDER

- Specify **L** or **R** hinging
- Pricing P-205

INSTALLATION TIP

- On 96" high units, stand unit up then slide toe kick in from the back and slide against the wall at the same time. Note that the toe kick will be narrower than the cabinet's overall width,
  allowing for a recessed toe on one side.
- If using decorative hardware, allow extra clearance when installing next to a wall.

© Copyright StarMark Cabinetry MARCH 2021

Block 5111 Chef's Pantry with Drawers and Wood Turntables

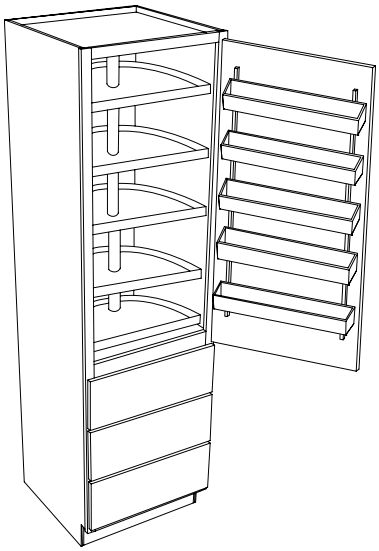

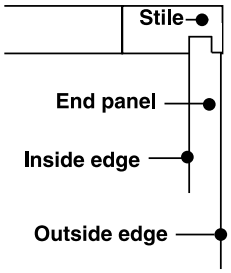

CPDW2481 **CPDW2490**

CPDW2484 **CPDW2493**

CPDW2487 **CPDW2496**

DESIGN CONSIDERATIONS

81", 84", 87", 90", 93", 96" High - 24" Deep

- Five 20" diameter wood turntables
- 5 adjustable wood door shelves
- Door shelves are field installed
- Door shelves are 20" wide
- The toe kick for 96" high cabinet is sent loose. Please specify in your order if you want the toe kick factory applied.
- Cabinet cannot be reduced in depth or width
- Cabinets greater than 90" in height receive a fixed shelf in the upper opening. The opening below the fixed shelf is 47".
- End panels are shifted to outside frame edge, eliminating ¼" reveal. End panels are not flush. See detail.
- Mortise and tenon doors greater than 42" high will have a center rail.

HOW TO ORDER

- Specify **L** or **R** hinging
- Pricing P-206

INSTALLATION TIP

- On 96" high units, stand unit up then slide toe kick in from the back and slide against the wall at the same time. Note that the toe kick will be narrower than the cabinet's overall width, allowing for a recessed toe on one side.
- If using decorative hardware, allow extra clearance when installing next to a wall.

Block 5120 Super Chef's Pantry

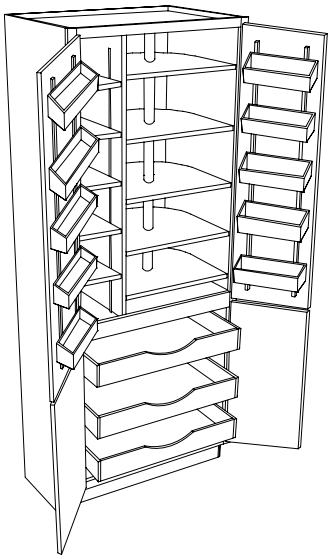

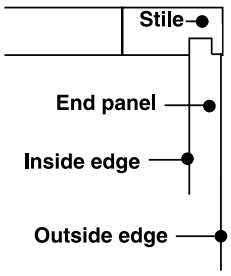

Butt Doors	Butt Doors	Butt Doors
2SCP3381	**2SCP3387**	**2SCP3393**
2SCP3681	**2SCP3687**	**2SCP3693**
2SCP3384	**2SCP3390**	**2SCP3396**
2SCP3684	**2SCP3690**	**2SCP3696**

DESIGN CONSIDERATIONS

81", 84", 87", 90", 93", 96" High - 24" Deep

- Five 22" diameter poly susan turntables
- 2 sets of 5 adjustable poly door shelves
- Door shelves are 13¾" wide
- Door shelves are field installed
- 3 adjustable roll out trays
- The toe kick for 96" high cabinet is sent loose. Please specify in your order if you want the toe kick factory applied.
- Partition installed with 5 adjustable shelves
- Cabinet cannot be reduced in depth or width
- Cabinets greater than 90" in height receive a fixed shelf in the upper (turntable) opening. The opening below the fixed shelf is 47".
- Mortise and tenon doors greater than 42" high will have a center rail.
- End panels are shifted to outside frame edge, eliminating ¼" reveal. End panels are not flush. See detail.

HOW TO ORDER

- Partition with shelves will be on the left unless your order specifies right.
- Pricing P-206

INSTALLATION TIP

- On 96" high units, stand unit up then slide toe kick in from the back and slide against the wall at the same time. Note that the toe kick will be narrower than the cabinet's overall width, allowing for a recessed toe on one side.
- If using decorative hardware, allow extra clearance when installing next to a wall.

© Copyright StarMark Cabinetry MARCH 2021

Block 5121 Super Chef's Pantry with Wood Turntables

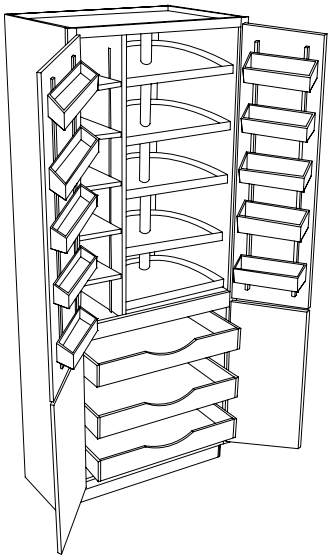

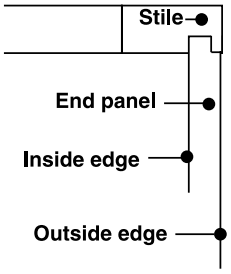

DESIGN CONSIDERATIONS

81", 84", 87", 90", 93", 96" High - 24" Deep

- Five 20" diameter wood turntables
- 2 sets of 5 adjustable wood door shelves
- Door shelves are 14" wide
- Door shelves are field installed
- 3 adjustable roll out trays
- The toe kick for 96" high cabinet is sent loose. Please specify in your order if you want the toe kick factory applied.
- Partition installed with 5 adjustable shelves
- Cabinet cannot be reduced in depth or width
- Cabinets greater than 90" in height receive a fixed shelf in the upper (turntable) opening. The opening below the fixed shelf is 47".
- Mortise and tenon doors greater than 42" high will have a center rail.
- End panels are shifted to outside frame edge, eliminating ¼" reveal. End panels are not flush. See detail.

HOW TO ORDER

- Partition with shelves will be on the left unless your order specifies right.
- Pricing P-207

INSTALLATION TIP

- On 96" high units, stand unit up then slide toe kick in from the back and slide against the wall at the same time. Note that the toe kick will be narrower than the cabinet's overall width, allowing for a recessed toe on one side.
- If using decorative hardware, allow extra clearance when installing next to a wall.

Butt Doors	Butt Doors	Butt Doors
2SCPW3381	**2SCPW3387**	**2SCPW3393**
2SCPW3681	**2SCPW3687**	**2SCPW3693**
2SCPW3384	**2SCPW3390**	**2SCPW3396**
2SCPW3684	**2SCPW3690**	**2SCPW3696**

Block 5131 Super Chef's Pantry with Drawers and Wood Turntables

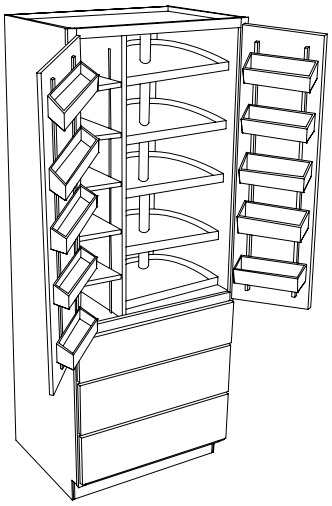

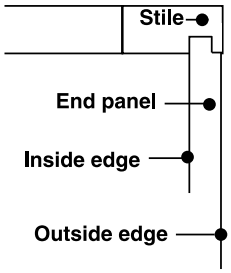

DESIGN CONSIDERATIONS

81", 84", 87", 90", 93", 96" High - 24" Deep

- Five 20" diameter wood turntables
- 2 sets of 5 adjustable wood door shelves
- Door shelves are 14" wide
- Door shelves are field installed
- The toe kick for 96" high cabinet is sent loose. Please specify in your order if you want the toe kick factory applied.
- Partition installed with 5 adjustable shelves
- Cabinet cannot be reduced in depth or width
- Cabinets greater than 90" in height receive a fixed shelf in the upper (turntable) opening. The opening below the fixed shelf is 47".
- Mortise and tenon doors greater than 42" high will have a center rail.
- End panels are shifted to outside frame edge, eliminating ¼" reveal. End panels are not flush. See detail.

HOW TO ORDER

- Partition with shelves will be on the left unless your order specifies right.
- Pricing P-207

INSTALLATION TIP

- On 96" high units, stand unit up then slide toe kick in from the back and slide against the wall at the same time. Note that the toe kick will be narrower than the cabinet's overall width, allowing for a recessed toe on one side.
- If using decorative hardware, allow extra clearance when installing next to a wall.

Butt Doors	Butt Doors
2SCPDW3381	**2SCPDW3390**
2SCPDW3681	**2SCPDW3690**
2SCPDW3384	**2SCPDW3393**
2SCPDW3684	**2SCPDW3693**
2SCPDW3387	**2SCPDW3396**
2SCPDW3687	**2SCPDW3696**

© Copyright StarMark Cabinetry MARCH 2021

Block 5150 Utility with Roll Out Trays

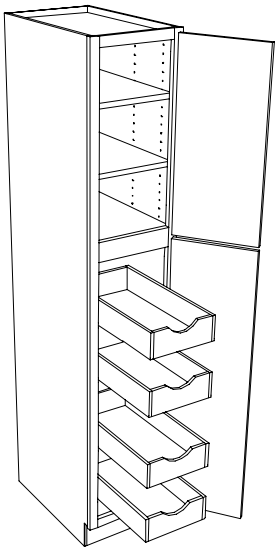

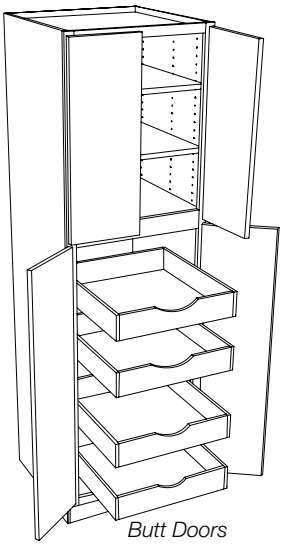

Butt Doors

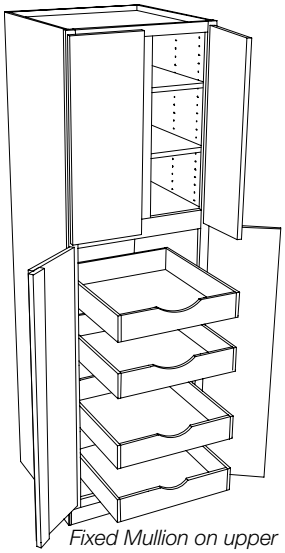

Fixed Mullion on upper portion. Attached Mullion on bottom portion.

Single Door	Butt Doors	Fixed Mullion
UB1581RT	**2UB2481RT**	
UB1881RT	**2UB2781RT**	
UB2181RT	**2UB3081RT**	
UB2481RT	**2UB3381RT**	
	2UB3681RT	
UB1584RT	**2UB2484RT**	
UB1884RT	**2UB2784RT**	
UB2184RT	**2UB3084RT**	
UB2484RT	**2UB3384RT**	
	2UB3684RT	**UB3684RT**
UB1587RT	**2UB2487RT**	
UB1887RT	**2UB2787RT**	
UB2187RT	**2UB3087RT**	
UB2487RT	**2UB3387RT**	
	2UB3687RT	
UB1590RT	**2UB2490RT**	
UB1890RT	**2UB2790RT**	
UB2190RT	**2UB3090RT**	
UB2490RT	**2UB3390RT**	
	2UB3690RT	**UB3690RT**
UB1593RT	**2UB2493RT**	
UB1893RT	**2UB2793RT**	
UB2193RT	**2UB3093RT**	
UB2493RT	**2UB3393RT**	
	2UB3693RT	
UB1596RT	**2UB2496RT**	
UB1896RT	**2UB2796RT**	
UB2196RT	**2UB3096RT**	
UB2496RT	**2UB3396RT**	
	2UB3696RT	**UB3696RT**

DESIGN CONSIDERATIONS

81", 84", 87", 90", 93", 96" High - 24" Deep

- 4 adjustable roll out trays
- 47" lower opening
- The toe kick for 96" high cabinet is sent loose. Please specify in your order if you want the toe kick factory applied.
- Mortise and tenon doors greater than 42" high will have a center rail.

Cabinet Height*	Number of shelves**	Height of Upper Portion
81"	2	24"
84"	2	27"
87"	2	30"
90"	2	33"
93"	3	36"
96"	3	39"

* At all heights, this cabinet was designed to align with adjoining wall cabinets.

** These shelves are in the upper opening

HOW TO ORDER

- Specify **L** or **R** hinging on Single Door cabinet
- Pricing P-208-209

INSTALLATION TIP

- On 96" high units, stand unit up then slide toe kick in from the back and slide against the wall at the same time. Note that the toe kick will be narrower than the cabinet's overall width, allowing for a recessed toe on one side.
- If using decorative hardware, allow extra clearance when installing next to a wall.

© Copyright StarMark Cabinetry MARCH 2021

Block 5151 Utility Stacked with Roll Out Trays

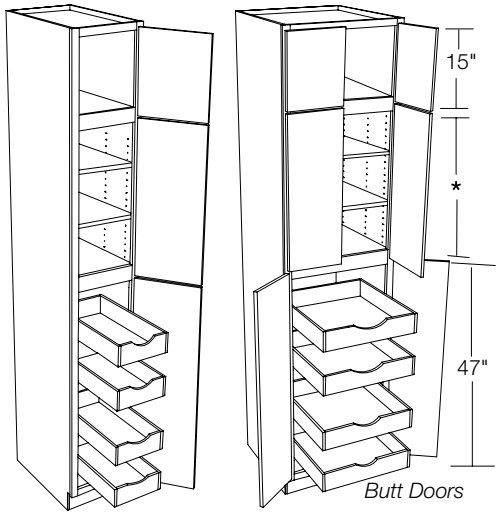

Single Door	Butt Doors
UKRT15102	**2UKRT24102**
UKRT18102	**2UKRT27102**
UKRT21102	**2UKRT30102**
UKRT24102	**2UKRT33102**
	2UKRT36102
UKRT15105	
UKRT18105	**2UKRT24105**
UKRT21105	**2UKRT27105**
UKRT24105	**2UKRT30105**
	2UKRT33105
UKRT15108	**2UKRT36105**
UKRT18108	
UKRT21108	**2UKRT24108**
UKRT24108	**2UKRT27108**
	2UKRT30108
UKRT15111	**2UKRT33108**
UKRT18111	**2UKRT36108**
UKRT21111	
UKRT24111	**2UKRT24111**
	2UKRT27111
UKRT15114	**2UKRT30111**
UKRT18114	**2UKRT33111**
UKRT21114	**2UKRT36111**
UKRT24114	
	2UKRT24114
UKRT15117	**2UKRT27114**
UKRT18117	**2UKRT30114**
UKRT21117	**2UKRT33114**
UKRT24117	**2UKRT36114**
UKRT15120	**2UKRT24117**
UKRT18120	**2UKRT27117**
UKRT21120	**2UKRT30117**
UKRT24120	**2UKRT33117**
	2UKRT36117
	2UKRT24120
	2UKRT27120
	2UKRT30120
	2UKRT33120
	2UKRT36120

DESIGN CONSIDERATIONS

102", 105", 108", 111", 114", 117", 120" High - 24" Deep

- 4 adjustable roll out trays
- 47" lower opening
- Adjustable shelves in middle opening. See the chart below quantities.
- The toe kick is sent loose. Please specify on your order if you want the toe kick factory applied.

Cabinet Height	Number of shelves	Height of Middle Opening
102"	2	27"
105"	2	30"
108"	2	33"
111"	3	36"
114"	3	39"
117"	3	42"
120"	3	45"

HOW TO ORDER

- Specify **L** or **R** hinging on Single Door cabinet
- Pricing P-210-211

© Copyright StarMark Cabinetry MARCH 2021

Block 5170 Utility Canned Goods Storage

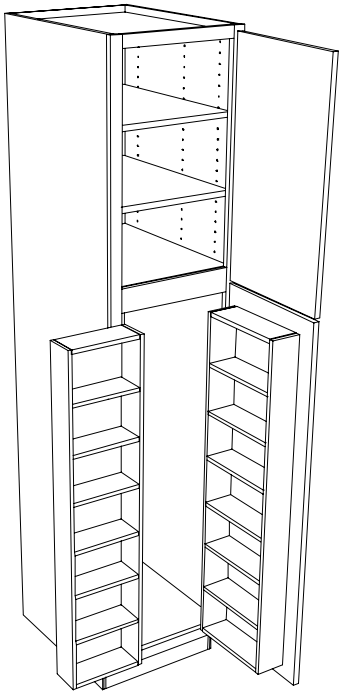

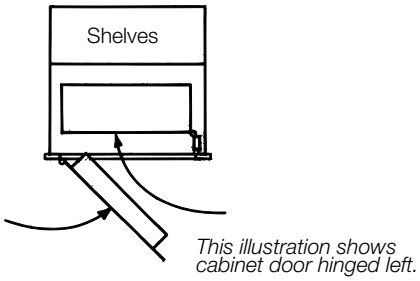

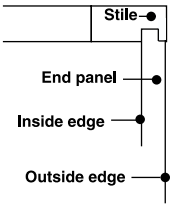

UCS1881
UCS1884
UCS1887
UCS1890
UCS1893
UCS1896

DESIGN CONSIDERATIONS

81", 84", 87", 90", 93", 96" High - 24" Deep

- Proper operation of pantry requires 120 degree door swing
- Pantry kit is field installed
- 47" lower opening
- The toe kick for 96" high cabinet is sent loose. Please specify in your order if you want the toe kick factory applied.
- Cabinet cannot be reduced in depth or width
- The 5 rear shelves are adjustable
- Not available in flat panel door styles
- Mortise and tenon doors greater than 42" high will have a center rail.
- End panels are shifted to outside frame edge, eliminating ¼" reveal. End panels are not flush. See detail.

Cabinet Width	Swing Out Shelf Info	Door Shelf Info
18"	8" deep, 10" wide	3⅞" deep, 12" wide

HOW TO ORDER

- Specify **L** or **R** hinging
- Pricing P-212

Cabinet Height*	Number of shelves**	Height of Upper Portion
81"	2	24"
84"	2	27"
87"	2	30"
90"	2	33"
93"	3	36"
96"	3	39"

* At all heights, this cabinet was designed to align with adjoining wall cabinets.
** These are in addition to the 5 in the lower opening.

INSTALLATION TIP

- If placed next to wall, must use 3" filler or extended stile for proper function; allow more if using decorative hardware
- On 96" high units, stand unit up then slide toe kick in from the back and slide against the wall at the same time. Note that the toe kick will be narrower than the cabinet's overall width, allowing for a recessed toe on one side.

NOTES/CAUTION

- Inset concealed hinges not available.

© Copyright StarMark Cabinetry MARCH 2021

Block 5180 Utility Canned Goods Storage

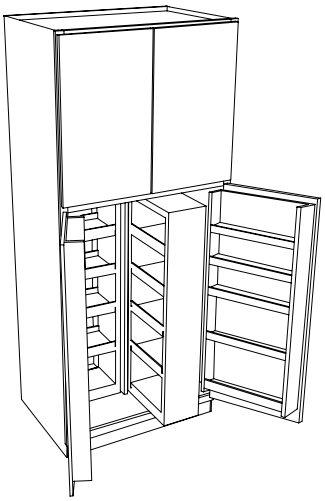

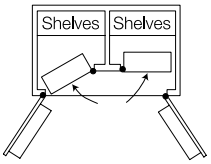

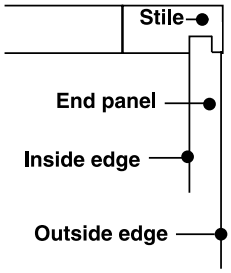

UCS3681	**UCS3690**
UCS3684	**UCS3693**
UCS3687	**UCS3696**

DESIGN CONSIDERATIONS

81", 84", 87", 90", 93", 96" High - 24" Deep

- Proper operation of pantry requires 120 degree door swing
- Pantry kit is field installed
- 47" lower opening
- The toe kick for 96" high cabinet is sent loose. Please specify in your order if you want the toe kick factory applied.
- Cabinet cannot be reduced in depth or width
- The 10 rear shelves are adjustable
- Fixed mullion on top
- Not available in flat panel door styles
- Mortise and tenon doors greater than 42" high will have a center rail.
- Traditional Overlay doors will have attached mullion on lower doors and fixed mullion in face frame on upper opening.
- Modern Overlay doors are butt doors on lower and upper opening. Upper doors overlay a fixed mullion in face frame.
- End panels are shifted to outside frame edge, eliminating ¼" reveal. End panels are not flush. See detail.

Cabinet Width	Swing Out Shelf Info	Door Shelf Info
36"	8" deep, 10" wide	3⅞" deep, 12" wide

HOW TO ORDER

- Pricing P-212

Cabinet Height*	Number of shelves**	Height of Upper Portion
81"	2	24"
84"	2	27"
87"	2	30"
90"	2	33"
93"	3	36"
96"	3	39"

* At all heights, this cabinet was designed to align with adjoining wall cabinets.

** These shelves are in the upper opening.

INSTALLATION TIP

- If placed next to wall, must use 3" filler or extended stile for proper function; allow more if using decorative hardware
- On 96" high units, stand unit up then slide toe kick in from the back and slide against the wall at the same time. Note that the toe kick will be narrower than the cabinet's overall width, allowing for a recessed toe on one side.

© Copyright StarMark Cabinetry MARCH 2021

Block 5185 Utility Pull Out Pantry with Soft Close

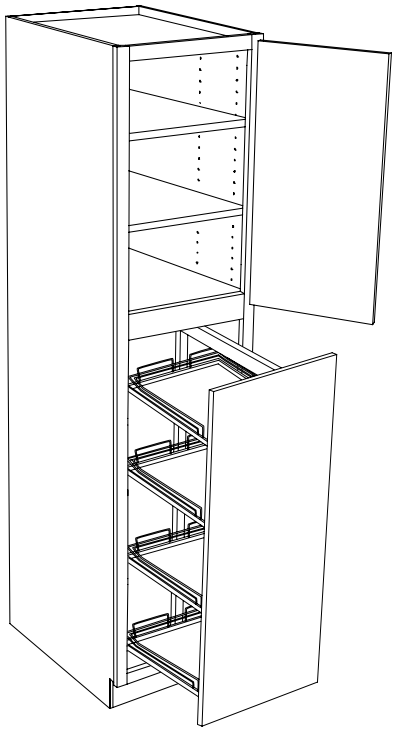

UPTYSC0981	**UPTYSC0987**	**UPTYSC0993**
UPTYSC1281	**UPTYSC1287**	**UPTYSC1293**
UPTYSC1581	**UPTYSC1587**	**UPTYSC1593**
UPTYSC1881	**UPTYSC1887**	**UPTYSC1893**
UPTYSC2181	**UPTYSC2187**	**UPTYSC2193**
UPTYSC2481	**UPTYSC2487**	**UPTYSC2493**
UPTYSC0984	**UPTYSC0990**	**UPTYSC0996**
UPTYSC1284	**UPTYSC1290**	**UPTYSC1296**
UPTYSC1584	**UPTYSC1590**	**UPTYSC1596**
UPTYSC1884	**UPTYSC1890**	**UPTYSC1896**
UPTYSC2184	**UPTYSC2190**	**UPTYSC2196**
UPTYSC2484	**UPTYSC2490**	**UPTYSC2496**

DESIGN CONSIDERATIONS

81", 84", 87", 90", 93", 96" High - 24" Deep

- Pull out pantry attached to door
- Pull out pantry slide is rated for 250 pounds and features soft close
- Center mounted pantry frame is the same size for all cabinet widths
- Includes four adjustable chrome and wood basket shelves with non-skid surface
- Opening width and basket width vary with cabinet width. See chart below.
- The opening height of the lower portion is 47". Upper portion changes with cabinet height. See chart below.
- No Reduced Depth modifications
- The toe kick for 96" high cabinet is sent loose. Please specify in your order if you want the toe kick factory applied.
- Mortise and tenon doors greater than 42" high will have a center rail.

Cabinet Width	Opening Width	Basket Width
9"	6"	5"
12"	9"	8"
15"	12"	11"
18"	15"	14"
21"	18"	17"
24"	21"	20"

Cabinet Height*	Number of shelves**	Height of Upper Portion
81"	2	24"
84"	2	27"
87"	2	30"
90"	2	33"
93"	3	36"
96"	3	39"

* At all heights, this cabinet was designed to align with adjoining wall cabinets.

** These shelves are in the upper opening

HOW TO ORDER

- Specify **L** or **R** hinging for upper door of cabinet.
- Pricing P-213

INSTALLATION TIP

- On 96" high units, stand unit up then slide toe kick in from the back and slide against the wall at the same time. Note that the toe kick will be narrower than the cabinet's overall width, allowing for a recessed toe on one side.

NOTES/CAUTION

- 9" wide cabinets not available in inset.

© Copyright StarMark Cabinetry MARCH 2021

Block 5187 Utility Pantry with Lavido Pull Out

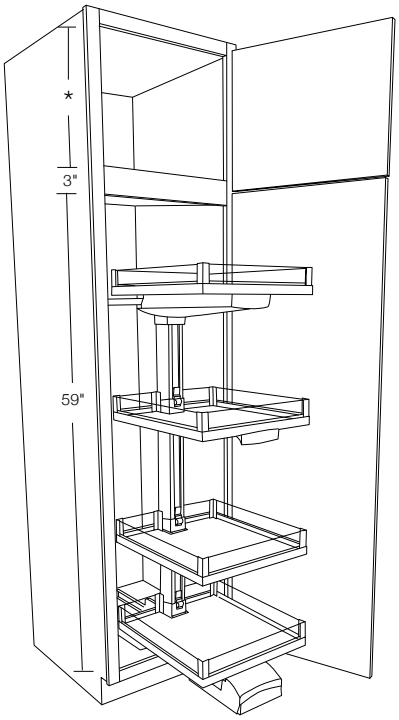

UPLAV2181	**UPLAV2190**
UPLAV2481	**UPLAV2490**
UPLAV2184	**UPLAV2193**
UPLAV2484	**UPLAV2493**
UPLAV2187	**UPLAV2196**
UPLAV2487	**UPLAV2496**

DESIGN CONSIDERATIONS

81", 84", 87", 90", 93", 96" High - 24" Deep

- Pull out pantry with 18½" deep shelves
- Pantry includes four chrome and plexi shelves with non-skid surface. The middle two shelves are adjustable.
- 59" high lower opening
- The toe kick for 96" high cabinet is sent loose. Please specify in your order if you want the toe kick factory applied.
- Adjustable shelves in upper area. See chart.
- Mortise and tenon doors greater than 42" high will have a center rail.

Cabinet Width	Opening Width	Shelf Width
21"	18"	15¾"
24"	21"	18¾"

Cabinet Height	Number of shelves	Height of Upper Portion*
81"	0	12"
84"	0	15"
87"	1	18"
90"	1	21"
93"	2	24"
96"	2	27"

HOW TO ORDER

- Specify **L** or **R** hinging
- Pricing P-214

INSTALLATION TIP

- On 96" high units, stand unit up then slide toe kick in from the back and slide against the wall at the same time. Note that the toe kick will be narrower than the cabinet's overall width, allowing for a recessed toe on one side.

© Copyright StarMark Cabinetry MARCH 2021

Block 5190 Utility Pull Out Pantry

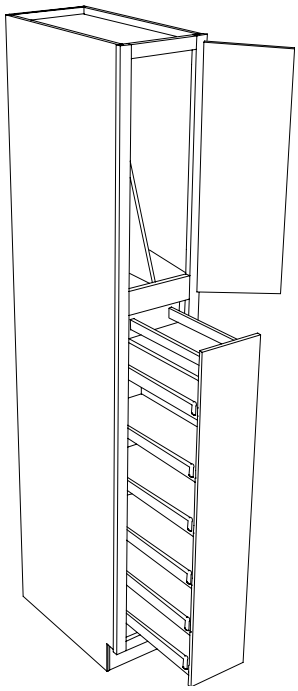

UPOP0981	**UPOP0990**
UPOP1281	**UPOP1290**
UPOP1581	**UPOP1590**
UPOP1881	**UPOP1890**
UPOP0984	**UPOP0993**
UPOP1284	**UPOP1293**
UPOP1584	**UPOP1593**
UPOP1884	**UPOP1893**
UPOP0987	**UPOP0996**
UPOP1287	**UPOP1296**
UPOP1587	**UPOP1596**
UPOP1887	**UPOP1896**

DESIGN CONSIDERATIONS

81", 84", 87", 90", 93", 96" High - 24" Deep

- Use this cabinet between a wall and a side-by-side refrigerator. It will give the clearance necessary to have full access to the refrigerator's internal components. It can also be used between a wall and standard refrigerator or other unusable spaces.
- No Reduced Depth modifications
- No Width modifications
- Top of cabinet has storage for trays and platters. Tray divider is centered in the cabinet.
- Pull out unit has five shelves. Two of them are adjustable. The bottom shelf, center shelf and second from top are stationary.
- Shelves are wood with chrome rails
- The opening height of the lower portion is 47" high. Upper portion changes with cabinet height. See chart below.
- Opening width and shelf width vary with cabinet width. See chart below.
- Heavy duty pull-out slide is rated for 450 pounds and features soft close.
- The toe kick for 96" high cabinet is sent loose. Please specify in your order if you want the toe kick factory applied.
- Mortise and tenon doors greater than 42" high will have a center rail.

Cabinet Width	Opening Width	Shelf Width
9"	6"	4¼"
12"	9"	7¼"
15"	12"	10¼"
18"	15"	13¼"

HOW TO ORDER

- Specify **L** or **R** hinging for upper door of cabinet.
- Pricing P-215

INSTALLATION TIP

- On 96" high units, stand unit up then slide toe kick in from the back and slide against the wall at the same time. Note that the toe kick will be narrower than the cabinet's overall width, allowing for a recessed toe on one side.
- Installation and adjustment video posted on OneTouch, in Installation and Care.

NOTES/CAUTION

- 9" wide cabinets not available in inset.

Cabinet Height	Height of Upper Opening	
81"	24"	
84"	27"	At all heights, this cabinet was designed to align with adjoining wall cabinets.
87"	30"	
90"	33"	
93"	36"	
96"	39"	

© Copyright StarMark Cabinetry MARCH 2021

Block 5198 Utility with Waste Bin

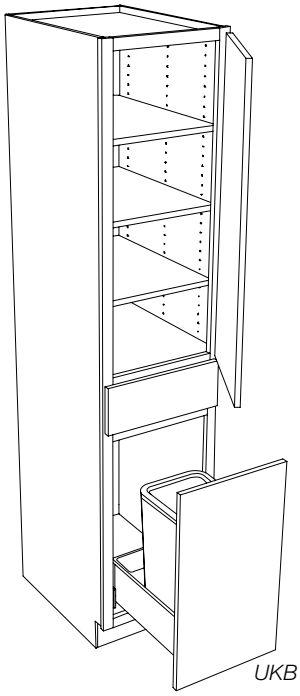

UKB15__shown

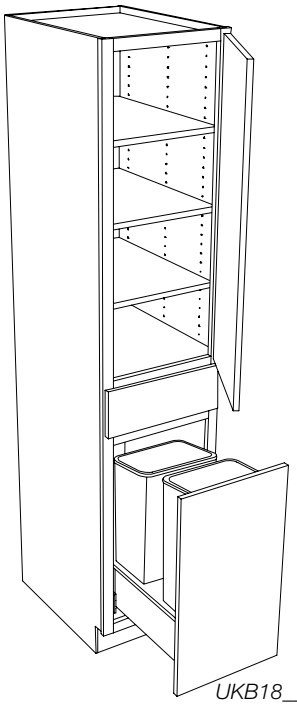

UKB18__shown

UKB1581	**UKB1590**
UKB1881	**UKB1890**
UKB1584	**UKB1593**
UKB1884	**UKB1893**
UKB1587	**UKB1596**
UKB1887	**UKB1896**

DESIGN CONSIDERATIONS

81", 84", 87", 90", 93", 96" High - 24" Deep

- Waste bin(s) rest on a platform that is attached to lower door
- Platform attached to the lower door has dovetailed joints and a bottom mount glide system that includes soft open and soft close.
- UKB15 has one 35 qt. gray colored plastic bin and a small bin for trash bag storage.
- UKB18 has two 35 qt. gray colored plastic bins.
- The toe kick for 96" high cabinet is sent loose. Please specify in your order if you want the toe kick factory applied.
- Mortise and tenon doors greater than 42" high will have a center rail.

HOW TO ORDER

- Specify **L** or **R** hinging for upper door of cabinet.
- Pricing P-216

INSTALLATION TIP

On 96" high units, stand unit up then slide toe kick in from the back and slide against the wall at the same time. Note that the toe kick will be narrower than the cabinet's overall width, allowing for a recessed toe on one side.

Cabinet Height	Number of shelves	Height of Upper Portion
81"	3	43½"
84"	3	46½"
87"	4	49½"
90"	4	52½"
93"	4	55½"
96"	5	58½"

© Copyright StarMark Cabinetry MARCH 2021

Block 5199 Utility with One Drawer and Door Below Tall Door

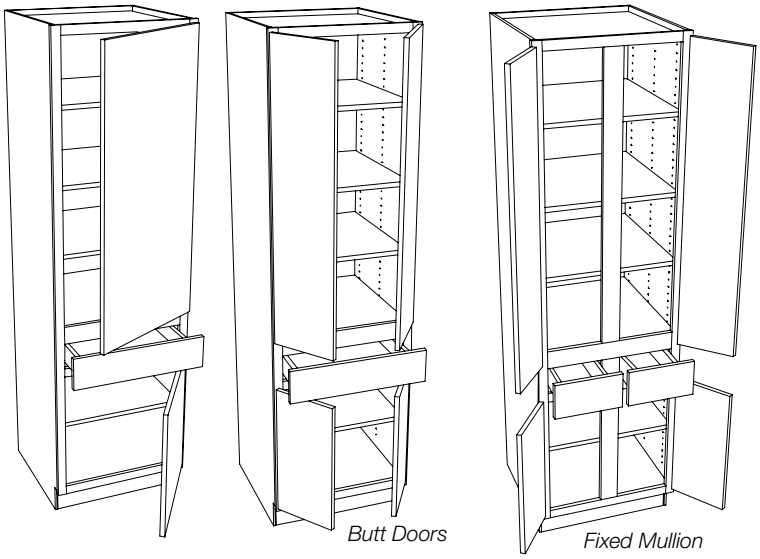

Single Door	Butt Doors	Fixed Mullion
U1DB1581	**2U1DB2481**	
U1DB1881	**2U1DB2781**	
U1DB2181	**2U1DB3081**	**U1DB3081**
U1DB2481	**2U1DB3381**	**U1DB3381**
	2U1DB3681	**U1DB3681**
U1DB1584	**2U1DB2484**	
U1DB1884	**2U1DB2784**	
U1DB2184	**2U1DB3084**	**U1DB3084**
U1DB2484	**2U1DB3384**	**U1DB3384**
	2U1DB3684	**U1DB3684**
U1DB1587	**2U1DB2487**	
U1DB1887	**2U1DB2787**	
U1DB2187	**2U1DB3087**	**U1DB3087**
U1DB2487	**2U1DB3387**	**U1DB3387**
	2U1DB3687	**U1DB3687**
U1DB1590	**2U1DB2490**	
U1DB1890	**2U1DB2790**	
U1DB2190	**2U1DB3090**	**U1DB3090**
U1DB2490	**2U1DB3390**	**U1DB3390**
	2U1DB3690	**U1DB3690**
U1DB1593	**2U1DB2493**	
U1DB1893	**2U1DB2793**	
U1DB2193	**2U1DB3093**	**U1DB3093**
U1DB2493	**2U1DB3393**	**U1DB3393**
	2U1DB3693	**U1DB3693**
U1DB1596	**2U1DB2496**	
U1DB1896	**2U1DB2796**	
U1DB2196	**2U1DB3096**	**U1DB3096**
U1DB2496	**2U1DB3396**	**U1DB3396**
	2U1DB3696	**U1DB3696**

DESIGN CONSIDERATIONS

81", 84", 87", 90", 93", 96" High - 24" Deep

- 20¾" lower opening has 1adjustable shelf. The number of additional shelves supplied is based on cabinet height. See the chart below.
- The toe kick for 96" high cabinet is sent loose. Please specify in your order if you want the toe kick factory applied.
- Mortise and tenon doors greater than 42" high will have a center rail.

Cabinet Height	Number of shelves**	Height of Upper Portion
81"	3	43½"
84"	3	46½"
87"	4	49½"
90"	4	52½"
93"	4	55½"
96"	5	58½"

** These shelves are in addition to the 1 in the lower opening.

HOW TO ORDER

- Specify **L** or **R** hinging on Single Door cabinet
- Pricing P-217-218

INSTALLATION TIP

On 96" high units, stand unit up then slide toe kick in from the back and slide against the wall at the same time. Note that the toe kick will be narrower than the cabinet's overall width, allowing for a recessed toe on one side.

© Copyright StarMark Cabinetry MARCH 2021

Block 5200 Utility with Three Drawers

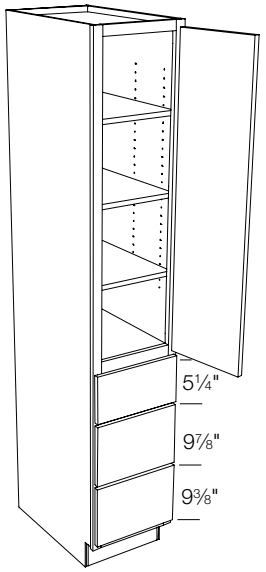

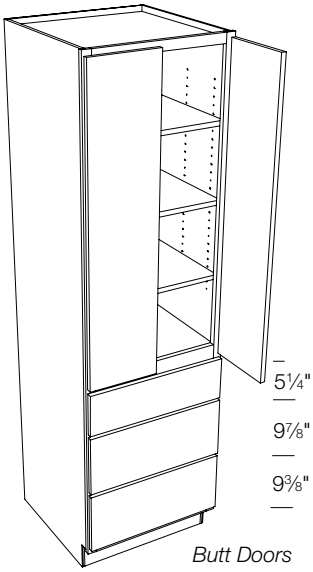

Butt Doors

Single Door	Butt Doors	Butt Doors
U3DB1581	**2U3DB2481**	**2U3DB2490**
U3DB1881	**2U3DB2781**	**2U3DB2790**
U3DB2181	**2U3DB3081**	**2U3DB3090**
U3DB2481	**2U3DB3381**	**2U3DB3390**
	2U3DB3681	**2U3DB3690**
U3DB1584		
U3DB1884	**2U3DB2484**	**2U3DB2493**
U3DB2184	**2U3DB2784**	**2U3DB2793**
U3DB2484	**2U3DB3084**	**2U3DB3093**
	2U3DB3384	**2U3DB3393**
U3DB1587	**2U3DB3684**	**2U3DB3693**
U3DB1887		
U3DB2187	**2U3DB2487**	**2U3DB2496**
U3DB2487	**2U3DB2787**	**2U3DB2796**
	2U3DB3087	**2U3DB3096**
U3DB1590	**2U3DB3387**	**2U3DB3396**
U3DB1890	**2U3DB3687**	**2U3DB3696**
U3DB2190		
U3DB2490		
U3DB1593		
U3DB1893		
U3DB2193		
U3DB2493		
U3DB1596		
U3DB1896		
U3DB2196		
U3DB2496		

DESIGN CONSIDERATIONS

81", 84", 87", 90", 93", 96" High - 24" Deep

- The toe kick for 96" high cabinet is sent loose. Please specify in your order if you want the toe kick factory applied.
- Mortise and tenon doors greater than 42" high will have a center rail.

HOW TO ORDER

- Specify **L** or **R** hinging on Single Door cabinet
- Pricing P-219-220

Height of cabinet	Number of shelves	Height of Upper Portion
81"	3	43½"
84"	3	46½"
87"	4	49½"
90"	4	52½"
93"	4	55½"
96"	5	58½"

INSTALLATION TIP

On 96" high units, stand unit up then slide toe kick in from the back and slide against the wall at the same time. Note that the toe kick will be narrower than the cabinet's overall width, allowing for a recessed toe on one side.

© Copyright StarMark Cabinetry MARCH 2021

Block 5201 Utility with Four Drawers

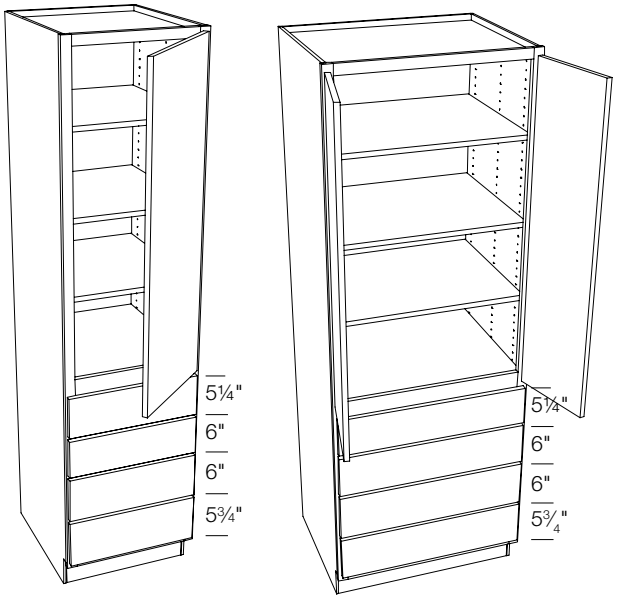

Single Door	Butt Doors	Butt Doors
U4DB1581	**2U4DB2481**	**2U4DB2490**
U4DB1881	**2U4DB2781**	**2U4DB2790**
U4DB2181	**2U4DB3081**	**2U4DB3090**
U4DB2481	**2U4DB3381**	**2U4DB3390**
	2U4DB3681	**2U4DB3690**
U4DB1584		
U4DB1884	**2U4DB2484**	**2U4DB2493**
U4DB2184	**2U4DB2784**	**2U4DB2793**
U4DB2484	**2U4DB3084**	**2U4DB3093**
	2U4DB3384	**2U4DB3393**
U4DB1587	**2U4DB3684**	**2U4DB3693**
U4DB1887		
U4DB2187	**2U4DB2487**	**2U4DB2496**
U4DB2487	**2U4DB2787**	**2U4DB2796**
	2U4DB3087	**2U4DB3096**
U4DB1590	**2U4DB3387**	**2U4DB3396**
U4DB1890	**2U4DB3687**	**2U4DB3696**
U4DB2190		
U4DB2490		
U4DB1593		
U4DB1893		
U4DB2193		
U4DB2493		
U4DB1596		
U4DB1896		
U4DB2196		
U4DB2496		

DESIGN CONSIDERATIONS

81", 84", 87", 90", 93", 96" High - 24" Deep

- The toe kick for 96" high cabinet is sent loose. Please specify in your order if you want the toe kick factory applied.
- Mortise and tenon doors greater than 42" high will have a center rail.

HOW TO ORDER

- Specify **L** or **R** hinging on Single Door cabinet
- Pricing P-221-222

Height of cabinet	Number of shelves	Height of Upper Portion
81"	3	43½"
84"	3	46½"
87"	4	49½"
90"	4	52½"
93"	4	55½"
96"	5	58½"

INSTALLATION TIP

On 96" high units, stand unit up then slide toe kick in from the back and slide against the wall at the same time. Note that the toe kick will be narrower than the cabinet's overall width, allowing for a recessed toe on one side.

© Copyright StarMark Cabinetry MARCH 2021

Block 5290 Pantry Tall Walk Through

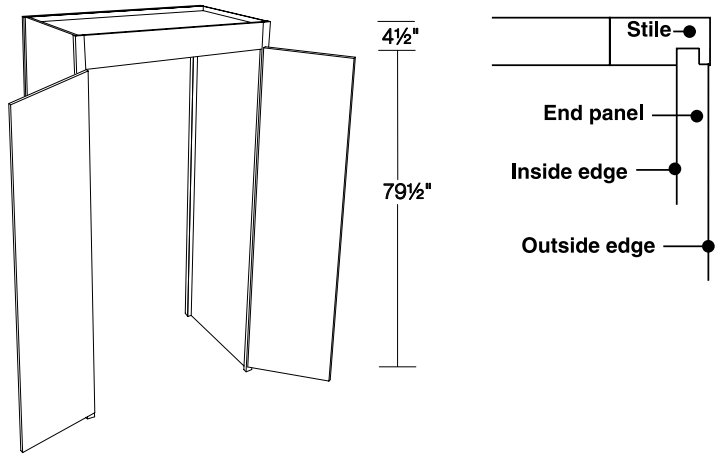

PTWT3084
PTWT3384
PTWT3684
PTWT3984

DESIGN CONSIDERATIONS

84" High - 24" Deep

- Minimum depth is 5"
- Doors will clear floor by 3/8".
- Hinges are routed into the face frame on Modern overlay door style orders.
- Finished Veneer Interior standard
- Secondary frame on back for stability and ease of attaching to wall
- Mortise and tenon doors are built with 6" WBR and three inserts
- Mitered doors are built with four battens attached to back, plus a toe space batten along with bottom.
- Aero, Monroe, Tabor and Tempo are built with two equally sized doors battened together.
- 2 3/4" filler cap may be ordered to apply above doors
- End panels are shifted to outside frame edge, eliminating 1/4" reveal. End panels are not flush. See detail.
- 165° hinges are standard with this cabinet.
- Soft close hinges are not available on this cabinet.

HOW TO ORDER

- Pricing P-223

NOTES/CAUTION

- To supply proper hinges and mounting plates, you must specify the available space behind the face frame when ordering this cabinet as an FFD in Inset.

Block 5292 Pantry Tall Walk Through

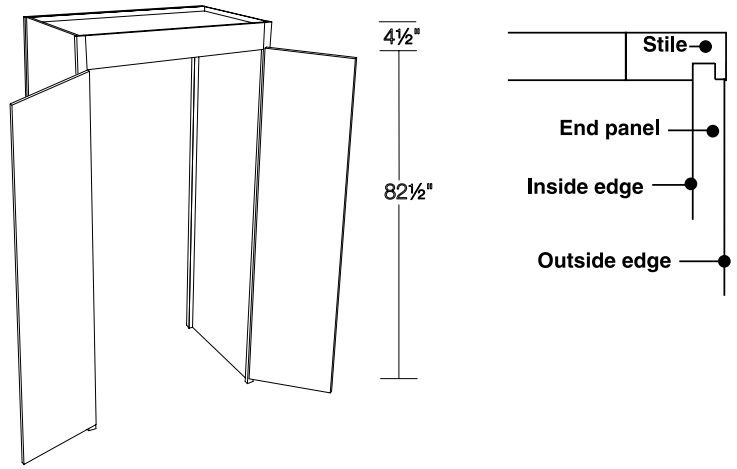

PTWT3087
PTWT3387
PTWT3687
PTWT3987

DESIGN CONSIDERATIONS

87" High - 24" Deep

- Minimum depth is 5"
- Doors will clear floor by 3/8".
- Hinges are routed into the face frame on Modern overlay door style orders.
- Finished Veneer Interior standard
- Secondary frame on back for stability and ease of attaching to wall
- Mortise and tenon doors are built with 6" WBR and three inserts
- Mitered doors are built with four battens attached to back, plus a toe space batten along with bottom.
- Aero, Monroe, Tabor and Tempo are built with two equally sized doors battened together.
- 2 3/4" filler cap may be ordered to apply above doors
- End panels are shifted to outside frame edge, eliminating 1/4" reveal. End panels are not flush. See detail.
- 165° hinges are standard with this cabinet.
- Soft close hinges are not available on this cabinet.

HOW TO ORDER

- Pricing P-223

NOTES/CAUTION

- To supply proper hinges and mounting plates, you must specify the available space behind the face frame when ordering this cabinet as an FFD in Inset.

© Copyright StarMark Cabinetry MARCH 2021

Block 5294 Pantry Tall Walk Through

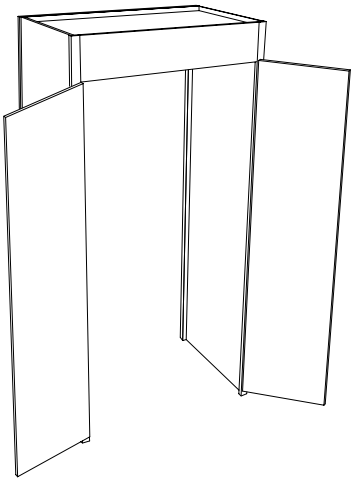

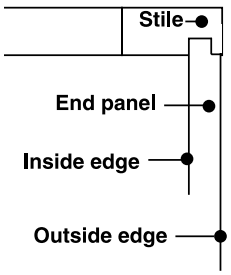

PTWT3090
PTWT3390
PTWT3690
PTWT3990

DESIGN CONSIDERATIONS

90" High - 24" Deep

- Minimum depth is 5"
- Doors will clear floor by ⅜".
- Hinges are routed into the face frame on Modern overlay door style orders.
- Finished Veneer Interior standard
- Secondary frame on back for stability and ease of attaching to wall
- Mortise and tenon doors are built with 6" WBR and three inserts
- Mitered doors are built with four battens attached to back, plus a toe space batten along with bottom.
- Aero, Monroe, Tabor and Tempo are built with two equally sized doors battened together.
- 5¾" filler cap may be ordered to apply above doors
- End panels are shifted to outside frame edge, eliminating ¼" reveal. End panels are not flush. See detail.
- 165° hinges are standard with this cabinet.
- Soft close hinges are not available on this cabinet.

HOW TO ORDER

- Pricing P-223

NOTES/CAUTION

- To supply proper hinges and mounting plates, you must specify the available space behind the face frame when ordering this cabinet as an FFD in Inset.

Block 5296 Pantry Tall Walk Through

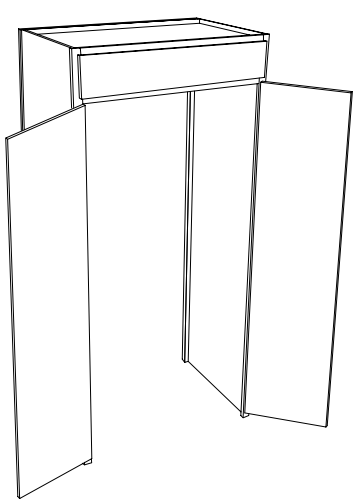

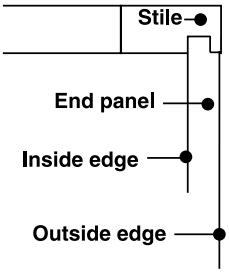

PTWT3093
PTWT3393
PTWT3693
PTWT3993

DESIGN CONSIDERATIONS

93" High - 24" Deep

- Minimum depth is 5"
- Doors will clear floor by ⅜".
- Hinges are routed into the face frame on Modern overlay door style orders.
- Finished Veneer Interior standard
- Secondary frame on back for stability and ease of attaching to wall
- Mortise and tenon doors are built with 6" WBR and three inserts
- Mitered doors are built with four battens attached to back, plus a toe space batten along with bottom.
- Aero, Monroe, Tabor and Tempo are built with two equally sized doors battened together.
- Drawer header hinged on top of opening
- End panels are shifted to outside frame edge, eliminating ¼" reveal. End panels are not flush. See detail.
- 165° hinges are standard with this cabinet.
- Soft close hinges are not available on this cabinet.

HOW TO ORDER

- Pricing P-224

NOTES/CAUTION

- To supply proper hinges and mounting plates, you must specify the available space behind the face frame when ordering this cabinet as an FFD in Inset.

© Copyright StarMark Cabinetry MARCH 2021

Block 5298 Pantry Tall Walk Through

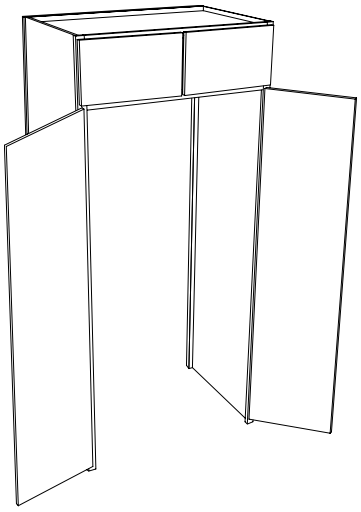

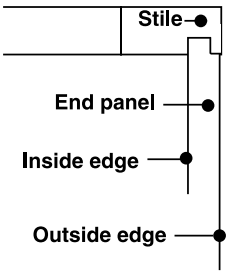

PTWT3096
PTWT3396
PTWT3696
PTWT3996

DESIGN CONSIDERATIONS

96" High - 24" Deep

- Minimum depth is 5"
- Doors will clear floor by ⅜".
- Hinges are routed into the face frame on Modern overlay door style orders.
- Finished Veneer Interior standard
- Secondary frame on back for stability and ease of attaching to wall
- Mortise and tenon doors are built with 6" WBR and three inserts
- Mitered doors are built with four battens attached to back, plus a toe space batten along with bottom.
- Aero, Monroe, Tabor and Tempo are built with two equally sized doors battened together.
- 9" top opening with hinged doors
- End panels are shifted to outside frame edge, eliminating ¼" reveal. End panels are not flush. See detail.
- 165° hinges are standard with this cabinet.
- Soft close hinges are not available on this cabinet.

HOW TO ORDER

- Pricing P-224

NOTES/CAUTION

- To supply proper hinges and mounting plates, you must specify the available space behind the face frame when ordering this cabinet as an FFD in Inset.

Block 5300 Refrigerator Cabinet

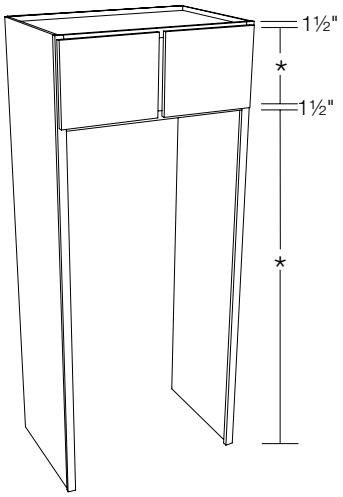

Fixed Mullion	Fixed Mullion
RU361281	**RU361890**
RU391281	**RU391890**
RU421281	**RU421890**
RU451281	**RU451890**
RU361584	**RU362193**
RU391584	**RU392193**
RU421584	**RU422193**
RU451584	**RU452193**
RU361587	**RU362496**
RU391587	**RU392496**
RU421587	**RU422496**
RU451587	**RU452496**

DESIGN CONSIDERATIONS

81", 84", 87", 90", 93", 96" High - 24" Deep

- Inside end panels are birch melamine
- 1½" side stile
- If upper opening is greater than 16½", an adjustable shelf is included

HOW TO ORDER

✪ To order this item, you must fill out and send an Appliance Template with the order. If an Appliance Template is not included, this cabinet will be built with an opening that is 3" smaller than the overall cabinet width.

- Pricing P-225

NOTES/CAUTION

- On beaded inset face frames, the appliance opening has a flush face frame unless specified otherwise by a drawing.

© Copyright StarMark Cabinetry MARCH 2021

Block 5400* Curved Out Utility

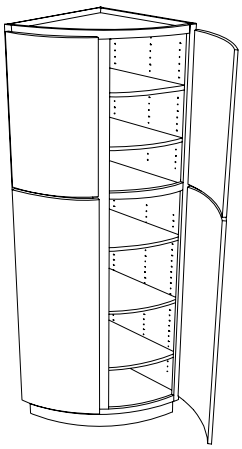

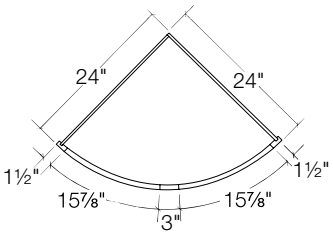

COU2484

DESIGN CONSIDERATIONS

84″ High - 24″ Radius

- 2 adjustable shelves in upper opening
- 3 adjustable shelves in lower opening
- 47″ lower opening
- No modifications available
- Back panels are ½″ veneer core plywood
- Mortise and tenon doors greater than 42″ high will have a center rail.
- Curved toe kick. See block 12200 for MCTBT.
- See blocks 12440 and 12480 for curved moulding.

HOW TO ORDER

- Available in Accord, Aero, Alite, Breckenridge, Georgetown, Monroe, Tempo and Tudor
- Not available in Alder and Rustic Alder
- Cannot be placed on rush schedule
- Pricing P-225

* On select door styles only

Block 5500 Angle End Utility

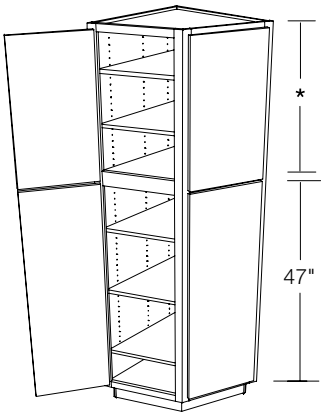

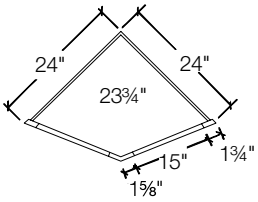

AEU2481
AEU2484
AEU2487

AEU2490
AEU2493
AEU2496

DESIGN CONSIDERATIONS

81″, 84″, 87″, 90″, 93″, 96″ High - 24″ Deep

- 3 adjustable shelves in lower opening
- Requires 24″ wall space each direction from 90 degree corner
- Adjustable shelves in upper opening. See chart.
- Mortise and tenon doors greater than 42″ high will have a center rail.
- The toe kick for 96″ cabinets is sent loose. Please specify on your order if you want the toe kick factory applied.

HOW TO ORDER

- Pricing P-226

Height of cabinet	Number of shelves	Height of Upper Portion
81″	2	24″
84″	2	27″
87″	2	30″
90″	2	33″
93″	3	36″
96″	3	39″

* In addition to three shelves in lower opening.

NOTES/CAUTION

- Inset concealed hinges not available.

© Copyright StarMark Cabinetry MARCH 2021

Block 5502 Utility Diagonal Wall

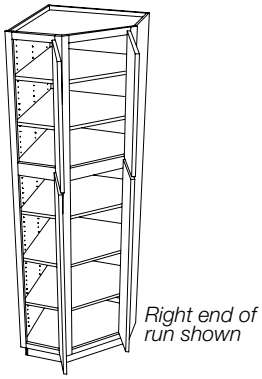

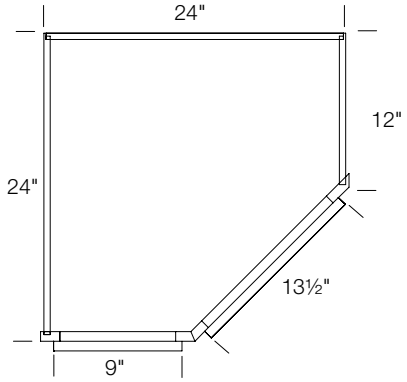

UDW2481L
UDW2481R

UDW2484L
UDW2484R

UDW2487L
UDW2487R

UDW2490L
UDW2490R

UDW2493L
UDW2493R

UDW2496L
UDW2496R

DESIGN CONSIDERATIONS

81", 84", 87", 90", 93", 96" High - 24" Deep

- 3 adjustable shelves in lower opening
- Adjustable shelves in upper opening. See chart.
- Mortise and tenon doors greater than 42" high will have a center rail.
- The toe kick for 96" cabinets is sent loose. Please specify on your order if you want the toe kick factory applied.

HOW TO ORDER

- Nomenclature indicates end of run: L for Left, R for Right.
- Left end of run both sets of doors hinged left, right end of run both sets of doors hinged right.
- Pricing P-226

Height of cabinet	Number of shelves*	Height of Upper Portion
81"	2	24"
84"	2	27"
87"	2	30"
90"	2	33"
93"	3	36"
96"	3	39"

* In addition to three shelves in lower opening.

Block 5505 Wine Cube Utility

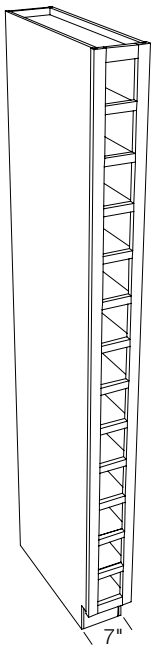

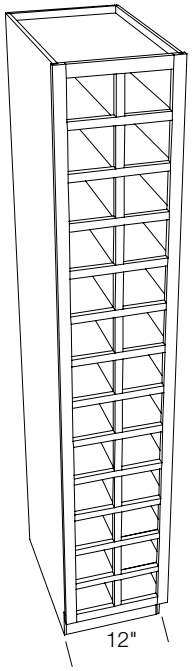

One column wide
U0784CUB13
U0790CUB14
U0796CUB15

Two columns wide
U1284CUB26
U1290CUB28
U1296CUB30

DESIGN CONSIDERATIONS

84", 90", 96" High - 24" Deep

- Finished veneer interior
- On the same cabinet, to create the best overall appearance, the top and bottom openings may be slightly different than the other openings on that cabinet.
- The size of the cube openings are determined by the overall cabinet size. So from cabinet to cabinet the openings will range from 5"-5¼"
- Cube opening sizes cannot be modified
- Dividers are created with 1" rails and stiles
- The toe kick for 96" cabinets is sent loose. Please specify on your order if you want the toe kick factory applied.

HOW TO ORDER

- See block 9020, 9030, 9040 to order Finished, Furniture or Flush finished ends.
- See block 9080 to order depths other than the standard 24" for the item.
- Pricing P-227

© Copyright StarMark Cabinetry MARCH 2021

Block 5510 Tall Bookcase

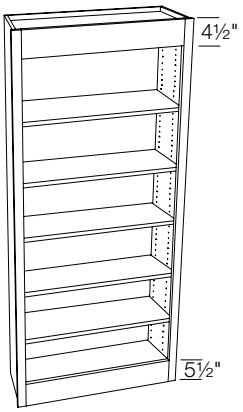

CCFU1281	**CCFU1287**	**CCFU1293**
CCFU1581	**CCFU1587**	**CCFU1593**
CCFU1881	**CCFU1887**	**CCFU1893**
CCFU2181	**CCFU2187**	**CCFU2193**
CCFU2481	**CCFU2487**	**CCFU2493**
CCFU2781	**CCFU2787**	**CCFU2793**
CCFU3081	**CCFU3087**	**CCFU3093**
CCFU3381	**CCFU3387**	**CCFU3393**
CCFU3681	**CCFU3687**	**CCFU3693**
CCFU1284	**CCFU1290**	**CCFU1296**
CCFU1584	**CCFU1590**	**CCFU1596**
CCFU1884	**CCFU1890**	**CCFU1896**
CCFU2184	**CCFU2190**	**CCFU2196**
CCFU2484	**CCFU2490**	**CCFU2496**
CCFU2784	**CCFU2790**	**CCFU2796**
CCFU3084	**CCFU3090**	**CCFU3096**
CCFU3384	**CCFU3390**	**CCFU3396**
CCFU3684	**CCFU3690**	**CCFU3696**

DESIGN CONSIDERATIONS

81", 84", 87", 90", 93", 96" High - 12" Deep

- Adjustable ¾" thick shelves. See chart.
- Straight valance is standard
- Drilled end panels
- For optional shelf trim see block 10070
- Ogee edge on frame opening
- Finished veneer interior

HOW TO ORDER

- Other Valances are available. See block 9170 for Valance Top Rail options.
- Ogee edge on frame may be modified when certain valances are specified for top rail. See HelpZone for information.
- Pricing P-227

Cabinet Height	Number of shelves
81"	5
84"	5
87"	5
90"	5
93"	6
96"	6

NOTES/CAUTION

- Beaded inset only available with straight valance. Other valances are available with flush inset. See How to Order for additional information.

© Copyright StarMark Cabinetry MARCH 2021

Block 6000 Single Oven

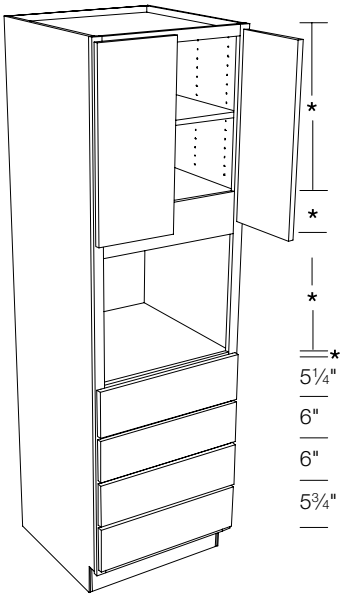

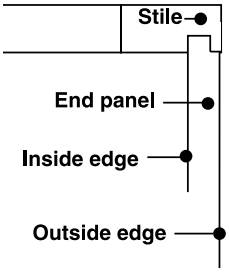

Butt Doors	Butt Doors
2OCS2481	**2OCS2490**
2OCS2781	**2OCS2790**
2OCS3081	**2OCS3090**
2OCS3181	**2OCS3190**
2OCS3381	**2OCS3390**
2OCS2484	**2OCS2493**
2OCS2784	**2OCS2793**
2OCS3084	**2OCS3093**
2OCS3184	**2OCS3193**
2OCS3384	**2OCS3393**
2OCS2487	**2OCS2496**
2OCS2787	**2OCS2796**
2OCS3087	**2OCS3096**
2OCS3187	**2OCS3196**
2OCS3387	**2OCS3396**

DESIGN CONSIDERATIONS

81", 84", 87", 90", 93", 96" High - 24" Deep

- The toe kick for 96" high cabinet is sent loose. Please specify in your order if you want the toe kick factory applied.
- Door and drawer openings may be affected by cut-outs.
- End panels are shifted to outside frame edge, eliminating ¼" reveal. End panels are not flush. See detail.

HOW TO ORDER

✪ To order this item, you must fill out and send an Appliance Template with the order.

- Maximum width cutout is 2" less than overall width of cabinet
- Pricing P-228

Height of top opening	Number of shelves
21"	1
24"	2
27"	2
30"	2
33"	2
36"	3
39"	3

INSTALLATION TIP

On 96" high units, stand unit up then slide toe kick in from the back and slide against the wall at the same time. Note that the toe kick will be narrower than the cabinet's overall width, allowing for a recessed toe on one side.

NOTES/CAUTION

- On beaded inset face frames, the appliance opening has a flush face frame unless specified otherwise by a drawing.

© Copyright StarMark Cabinetry MARCH 2021

Block 6001 Single Oven Stacked

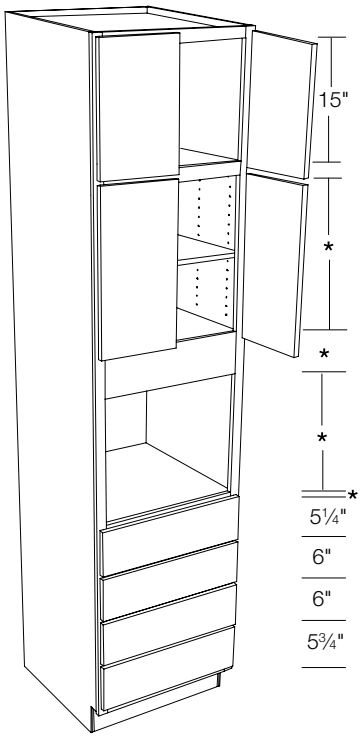

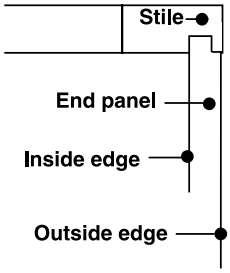

DESIGN CONSIDERATIONS

102", 105", 108", 111", 114", 117", 120" High - 24" Deep

- Door and drawer openings may be affected by cut-outs.
- End panels are shifted to outside frame edge, eliminating ¼" reveal. End panels are not flush. See detail.
- The toe kick is sent loose. Please specify on your order if you want the toe kick factory applied.

HOW TO ORDER

✪ To order this item, you must fill out and send an Appliance Template with the order.

- Maximum width cutout is 2" less than overall width of cabinet
- Pricing P-229

Height of second opening	Number of shelves
21"	1
24"	2
27"	2
30"	2
33"	2
36"	3
39"	3

NOTES/CAUTION

- On beaded inset face frames, the appliance opening has a flush face frame unless specified otherwise by a drawing.

Butt Doors	Butt Doors	Butt Doors
2OCSK24102	**2OCSK24111**	**2OCSK24120**
2OCSK27102	**2OCSK27111**	**2OCSK27120**
2OCSK30102	**2OCSK30111**	**2OCSK30120**
2OCSK31102	**2OCSK31111**	**2OCSK31120**
2OCSK33102	**2OCSK33111**	**2OCSK33120**
2OCSK24105	**2OCSK24114**	
2OCSK27105	**2OCSK27114**	
2OCSK30105	**2OCSK30114**	
2OCSK31105	**2OCSK31114**	
2OCSK33105	**2OCSK33114**	
2OCSK24108	**2OCSK24117**	
2OCSK27108	**2OCSK27117**	
2OCSK30108	**2OCSK30117**	
2OCSK31108	**2OCSK31117**	
2OCSK33108	**2OCSK33117**	

© Copyright StarMark Cabinetry MARCH 2021

Block 6010 Extra Wide Single Oven

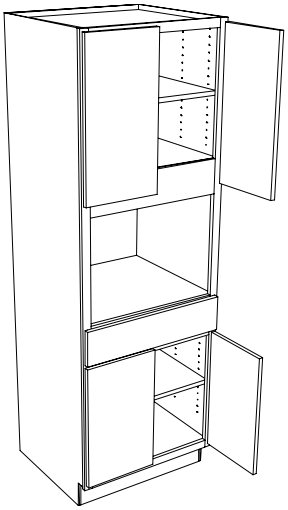

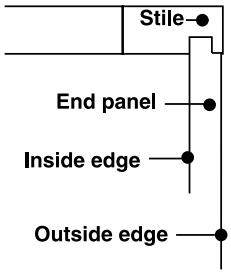

Butt Doors	Butt Doors	Butt Doors
2OC2781	**2OC2787**	**2OC2793**
2OC3081	**2OC3087**	**2OC3093**
2OC3181	**2OC3187**	**2OC3193**
2OC3381	**2OC3387**	**2OC3393**
2OC3681	**2OC3687**	**2OC3693**
2OC2784	**2OC2790**	**2OC2796**
2OC3084	**2OC3090**	**2OC3096**
2OC3184	**2OC3190**	**2OC3196**
2OC3384	**2OC3390**	**2OC3396**
2OC3684	**2OC3690**	**2OC3696**

DESIGN CONSIDERATIONS

81", 84", 87", 90", 93", 96" High - 24" Deep

- 1 adjustable full depth shelf in bottom opening
- The toe kick for 96" high cabinet is sent loose. Please specify in your order if you want the toe kick factory applied.
- Door and drawer openings may be affected by cut-outs.
- End panels are shifted to outside frame edge, eliminating ¼" reveal. End panels are not flush. See detail.

HOW TO ORDER

✪ To order this item, you must fill out and send an Appliance Template with the order.

- Maximum width cutout is 2" less than overall width of cabinet
- Pricing P-230

Height of top opening	Number of shelves*
21"	1
24"	2
27"	2
30"	2
33"	2
36"	3
39"	3

* In addition to one shelf in lower opening

INSTALLATION TIP

On 96" high units, stand unit up then slide toe kick in from the back and slide against the wall at the same time. Note that the toe kick will be narrower than the cabinet's overall width, allowing for a recessed toe on one side.

NOTES/CAUTION

- On beaded inset face frames, the appliance opening has a flush face frame unless specified otherwise by a drawing.

© Copyright StarMark Cabinetry MARCH 2021

Block 6011 Extra Wide Single Oven Stacked

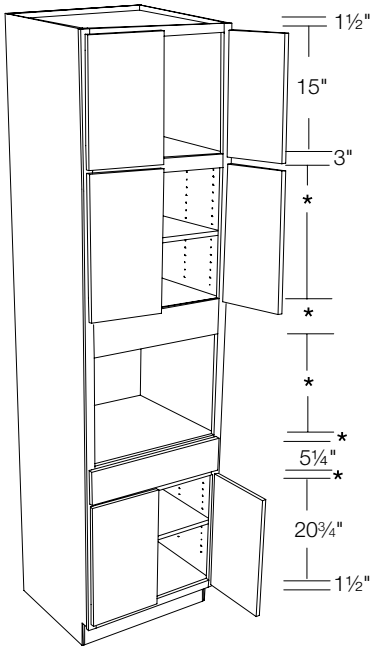

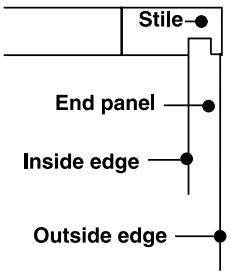

DESIGN CONSIDERATIONS

102", 105", 108", 111", 114", 117", 120" High - 24" Deep

- 1 adjustable full depth shelf in bottom opening
- Door and drawer openings may be affected by cut-outs.
- End panels are shifted to outside frame edge, eliminating ¼" reveal. End panels are not flush. See detail.
- The toe kick is sent loose. Please specify on your order if you want the toe kick factory applied.

HOW TO ORDER

✪ To order this item, you must fill out and send an Appliance Template with the order.

- Maximum width cutout is 2" less than overall width of cabinet
- Pricing P-231

Height of second opening	Number of shelves*
21"	1
24"	2
27"	2
30"	2
33"	2
36"	3
39"	3

* In addition to one shelf in lower opening

NOTES/CAUTION

- On beaded inset face frames, the appliance opening has a flush face frame unless specified otherwise by a drawing.

Butt Doors	Butt Doors	Butt Doors	Butt Doors
2OCK27102	**2OCK27108**	**2OCK27114**	**2OCK27120**
2OCK30102	**2OCK30108**	**2OCK30114**	**2OCK30120**
2OCK31102	**2OCK31108**	**2OCK31114**	**2OCK31120**
2OCK33102	**2OCK33108**	**2OCK33114**	**2OCK33120**
2OCK36102	**2OCK36108**	**2OCK36114**	**2OCK36120**
2OCK27105	**2OCK27111**	**2OCK27117**	
2OCK30105	**2OCK30111**	**2OCK30117**	
2OCK31105	**2OCK31111**	**2OCK31117**	
2OCK33105	**2OCK33111**	**2OCK33117**	
2OCK36105	**2OCK36111**	**2OCK36117**	

© Copyright StarMark Cabinetry MARCH 2021

Block 6020 Universal Oven

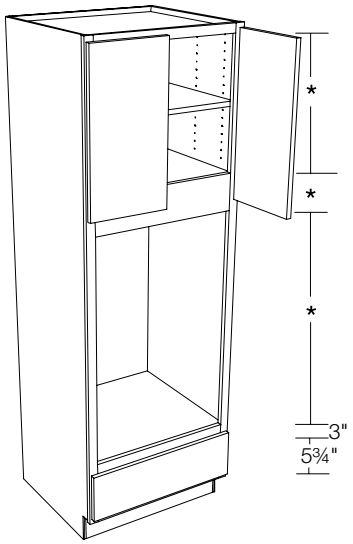

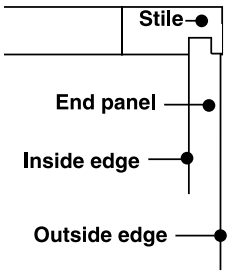

Butt Doors	Butt Doors	Butt Doors
2OCU2781	**2OCU2787**	**2OCU2793**
2OCU3081	**2OCU3087**	**2OCU3093**
2OCU3181	**2OCU3187**	**2OCU3193**
2OCU3381	**2OCU3387**	**2OCU3393**
2OCU2784	**2OCU2790**	**2OCU2796**
2OCU3084	**2OCU3090**	**2OCU3096**
2OCU3184	**2OCU3190**	**2OCU3196**
2OCU3384	**2OCU3390**	**2OCU3396**

DESIGN CONSIDERATIONS

81", 84", 87", 90", 93", 96" High - 24" Deep

- The toe kick for 96" high cabinet is sent loose. Please specify in your order if you want the toe kick factory applied.
- Door and drawer openings may be affected by cut-outs.
- End panels are shifted to outside frame edge, eliminating ¼" reveal. End panels are not flush. See detail.

HOW TO ORDER

✪ To order this item, you must fill out and send an Appliance Template with the order.

- Maximum width cutout is 2" less than overall width of cabinet
- Pricing P-232

Height of top opening	Number of shelves
21"	1
24"	2
27"	2
30"	2
33"	2
36"	3
39"	3

INSTALLATION TIP

On 96" high units, stand unit up then slide toe kick in from the back and slide against the wall at the same time. Note that the toe kick will be narrower than the cabinet's overall width, allowing for a recessed toe on one side.

NOTES/CAUTION

- On beaded inset face frames, the appliance opening has a flush face frame unless specified otherwise by a drawing.

© Copyright StarMark Cabinetry MARCH 2021

Block 6021 Universal Oven Stacked

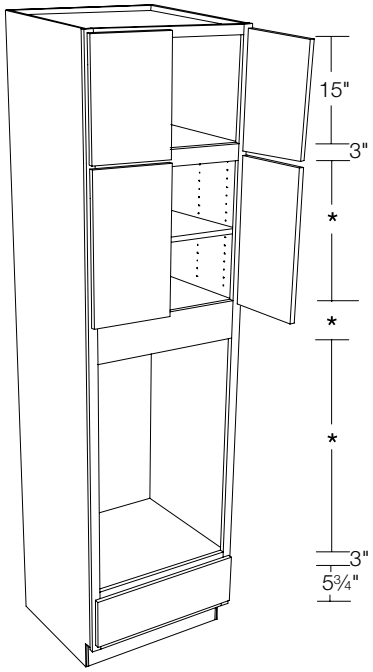

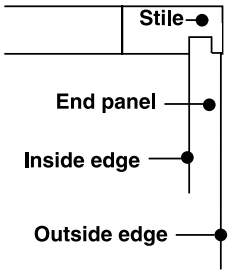

DESIGN CONSIDERATIONS

102", 105", 108", 111", 114", 117", 120" High - 24" Deep

- Door and drawer openings may be affected by cut-outs.
- End panels are shifted to outside frame edge, eliminating ¼" reveal. End panels are not flush. See detail.
- The toe kick is sent loose. Please specify on your order if you want the toe kick factory applied.

HOW TO ORDER

✪ To order this item, you must fill out and send an Appliance Template with the order.

- Maximum width cutout is 2" less than overall width of cabinet
- Pricing P-233

Height of second opening	Number of shelves
21"	1
24"	2
27"	2
30"	2
33"	2
36"	3
39"	3

NOTES/CAUTION

- On beaded inset face frames, the appliance opening has a flush face frame unless specified otherwise by a drawing.

Butt Doors	Butt Doors	Butt Doors	Butt Doors
2OCUK27102	**2OCUK27108**	**2OCUK27114**	**2OCUK27120**
2OCUK30102	**2OCUK30108**	**2OCUK30114**	**2OCUK30120**
2OCUK31102	**2OCUK31108**	**2OCUK31114**	**2OCUK31120**
2OCUK33102	**2OCUK33108**	**2OCUK33114**	**2OCUK33120**
2OCUK27105	**2OCUK27111**	**2OCUK27117**	
2OCUK30105	**2OCUK30111**	**2OCUK30117**	
2OCUK31105	**2OCUK31111**	**2OCUK31117**	
2OCUK33105	**2OCUK33111**	**2OCUK33117**	

© Copyright StarMark Cabinetry MARCH 2021

Block 6022 Flush Universal Oven

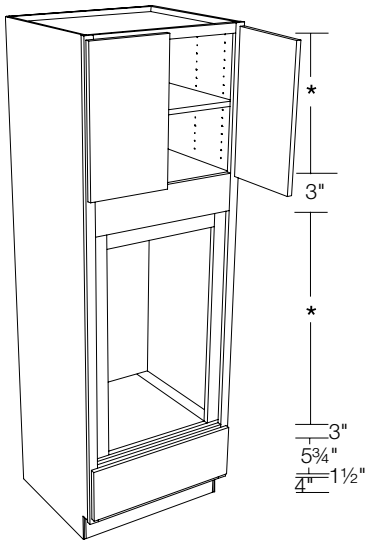

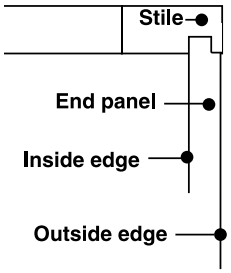

Butt Doors	Butt Doors	Butt Doors
2OCUFL2781	**2OCUFL2787**	**2OCUFL2793**
2OCUFL3081	**2OCUFL3087**	**2OCUFL3093**
2OCUFL3181	**2OCUFL3187**	**2OCUFL3193**
2OCUFL3381	**2OCUFL3387**	**2OCUFL3393**
2OCUFL2784	**2OCUFL2790**	**2OCUFL2796**
2OCUFL3084	**2OCUFL3090**	**2OCUFL3096**
2OCUFL3184	**2OCUFL3190**	**2OCUFL3196**
2OCUFL3384	**2OCUFL3390**	**2OCUFL3396**

DESIGN CONSIDERATIONS

81", 84", 87", 90", 93", 96" High - 24" Deep

- The toe kick for 96" high cabinet is sent loose. Please specify in your order if you want the toe kick factory applied.
- Door and drawer openings may be affected by cut-outs.
- End panels are shifted to outside frame edge, eliminating ¼" reveal. End panels are not flush. See detail.
- Specifically designed for the Wolf inset ovens
- Finished veneer interior
- Secondary frame for oven to set flush with the main cabinet frame.

HOW TO ORDER

✪ To order this item, you must fill out and send an Appliance Template with the order.

- Maximum width cutout is 2" less than overall width of cabinet
- Pricing P-234

Height of top opening	Number of shelves
21"	1
24"	2
27"	2
30"	2
33"	2
36"	3
39"	3

INSTALLATION TIP

On 96" high units, stand unit up then slide toe kick in from the back and slide against the wall at the same time. Note that the toe kick will be narrower than the cabinet's overall width, allowing for a recessed toe on one side.

NOTES/CAUTION

- On beaded inset face frames, the appliance opening has a flush face frame unless specified otherwise by a drawing.

© Copyright StarMark Cabinetry MARCH 2021

Block 6040 Microwave and Single Oven

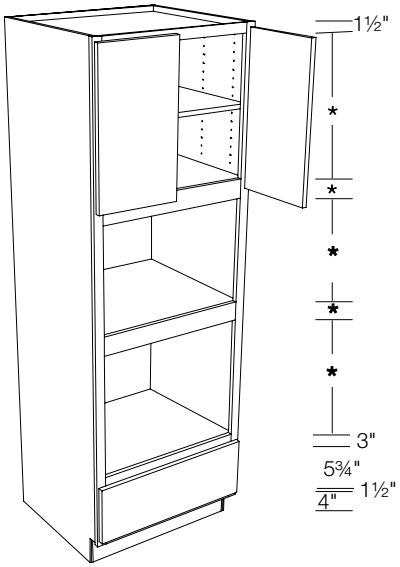

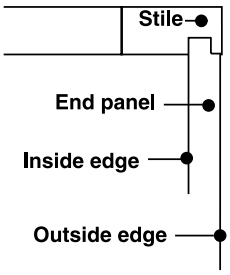

Butt Doors	Butt Doors	Butt Doors
2OCSM2781	**2OCSM2787**	**2OCSM2793**
2OCSM3081	**2OCSM3087**	**2OCSM3093**
2OCSM3181	**2OCSM3187**	**2OCSM3193**
2OCSM3381	**2OCSM3387**	**2OCSM3393**
2OCSM2784	**2OCSM2790**	**2OCSM2796**
2OCSM3084	**2OCSM3090**	**2OCSM3096**
2OCSM3184	**2OCSM3190**	**2OCSM3196**
2OCSM3384	**2OCSM3390**	**2OCSM3396**

DESIGN CONSIDERATIONS

81", 84", 87", 90", 93", 96" High - 24" Deep

- The toe kick for 96" high cabinet is sent loose. Please specify in your order if you want the toe kick factory applied.
- Door and drawer openings may be affected by cut-outs.
- End panels are shifted to outside frame edge, eliminating ¼" reveal. End panels are not flush. See detail.

HOW TO ORDER

✪ To order this item, you must fill out and send an Appliance Template with the order.

- Maximum width cutout is 2" less than overall width of cabinet
- Pricing P-235

Height of top opening	Number of shelves
21"	1
24"	2
27"	2
30"	2
33"	2
36"	3
39"	3

INSTALLATION TIP

On 96" high units, stand unit up then slide toe kick in from the back and slide against the wall at the same time. Note that the toe kick will be narrower than the cabinet's overall width, allowing for a recessed toe on one side.

NOTES/CAUTION

- On beaded inset face frames, the appliance opening has a flush face frame unless specified otherwise by a drawing.

© Copyright StarMark Cabinetry MARCH 2021

Block 6041 Microwave and Single Oven with Warming Drawer

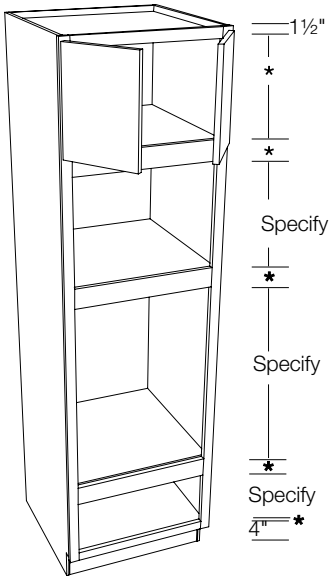

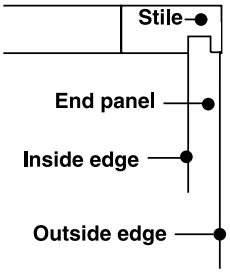

Butt Doors	Butt Doors	Butt Doors
2OCSMW2781	**2OCSMW2787**	**2OCSMW2793**
2OCSMW3081	**2OCSMW3087**	**2OCSMW3093**
2OCSMW3181	**2OCSMW3187**	**2OCSMW3193**
2OCSMW3381	**2OCSMW3387**	**2OCSMW3393**
2OCSMW2784	**2OCSMW2790**	**2OCSMW2796**
2OCSMW3084	**2OCSMW3090**	**2OCSMW3096**
2OCSMW3184	**2OCSMW3190**	**2OCSMW3196**
2OCSMW3384	**2OCSMW3390**	**2OCSMW3396**

DESIGN CONSIDERATIONS

81", 84", 87", 90", 93", 96" High - 24" Deep

- The toe kick for 96" high cabinet is sent loose. Please specify in your order if you want the toe kick factory applied.
- Door and drawer openings may be affected by cut-outs.
- End panels are shifted to outside frame edge, eliminating ¼" reveal. End panels are not flush. See detail.

HOW TO ORDER

✪ To order this item, you must fill out and send an Appliance Template with the order.

- Maximum width cutout is 2" less than overall width of cabinet
- Pricing P-236

Height of top opening	Number of shelves
21"	1
24"	2
27"	2
30"	2
33"	2
36"	3
39"	3

INSTALLATION TIP

On 96" high units, stand unit up then slide toe kick in from the back and slide against the wall at the same time. Note that the toe kick will be narrower than the cabinet's overall width, allowing for a recessed toe on one side.

NOTES/CAUTION

- On beaded inset face frames, the appliance opening has a flush face frame unless specified otherwise by a drawing.

© Copyright StarMark Cabinetry MARCH 2021

Block 6042 Flush Microwave and Single Oven

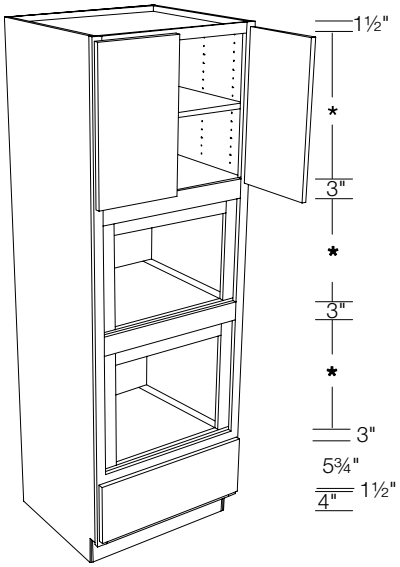

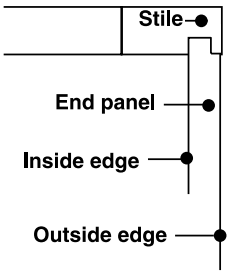

Butt Doors	Butt Doors	Butt Doors
2OCMFL2781	**2OCMFL2787**	**2OCMFL2793**
2OCMFL3081	**2OCMFL3087**	**2OCMFL3093**
2OCMFL3181	**2OCMFL3187**	**2OCMFL3193**
2OCMFL3381	**2OCMFL3387**	**2OCMFL3393**
2OCMFL2784	**2OCMFL2790**	**2OCMFL2796**
2OCMFL3084	**2OCMFL3090**	**2OCMFL3096**
2OCMFL3184	**2OCMFL3190**	**2OCMFL3196**
2OCMFL3384	**2OCMFL3390**	**2OCMFL3396**

DESIGN CONSIDERATIONS

81", 84", 87", 90", 93", 96" High - 24" Deep

- The toe kick for 96" high cabinet is sent loose. Please specify in your order if you want the toe kick factory applied.
- Door and drawer openings may be affected by cut-outs.
- End panels are shifted to outside frame edge, eliminating ¼" reveal. End panels are not flush. See detail.
- Specifically designed for the Wolf inset ovens
- Finished veneer interior
- Secondary frame for oven to set flush with the main cabinet frame.

HOW TO ORDER

✪ To order this item, you must fill out and send an Appliance Template with the order.

- Maximum width cutout is 2" less than overall width of cabinet
- Pricing P-237

Height of top opening	Number of shelves
21"	1
24"	2
27"	2
30"	2
33"	2
36"	3
39"	3

INSTALLATION TIP

On 96" high units, stand unit up then slide toe kick in from the back and slide against the wall at the same time. Note that the toe kick will be narrower than the cabinet's overall width, allowing for a recessed toe on one side.

NOTES/CAUTION

- On beaded inset face frames, the appliance opening has a flush face frame unless specified otherwise by a drawing.

© Copyright StarMark Cabinetry MARCH 2021

Block 6043 Microwave and Single Oven Stacked

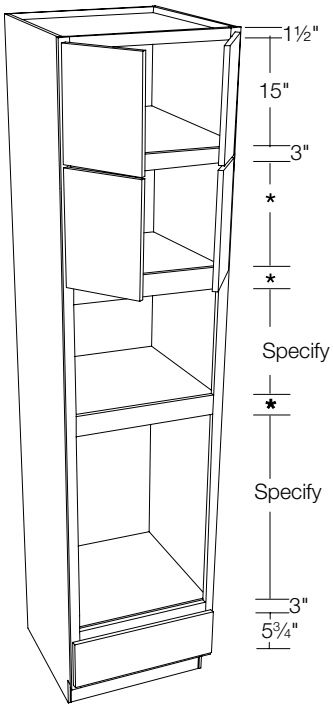

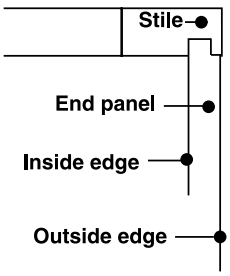

DESIGN CONSIDERATIONS

102", 105", 108", 111", 114", 117", 120" High - 24" Deep

- Door and drawer openings may be affected by cut-outs.
- End panels are shifted to outside frame edge, eliminating ¼" reveal. End panels are not flush. See detail.
- The toe kick is sent loose. Please specify on your order if you want the toe kick factory applied.

HOW TO ORDER

✪ To order this item, you must fill out and send an Appliance Template with the order.

- Maximum width cutout is 2" less than overall width of cabinet
- Pricing P-238

Height of second opening	Number of shelves
21"	1
24"	2
27"	2
30"	2

NOTES/CAUTION

- On beaded inset face frames, the appliance opening has a flush face frame unless specified otherwise by a drawing.

Butt Doors	Butt Doors	Butt Doors	Butt Doors
2OSMK27102	**2OSMK27108**	**2OSMK27114**	**2OSMK27120**
2OSMK30102	**2OSMK30108**	**2OSMK30114**	**2OSMK30120**
2OSMK31102	**2OSMK31108**	**2OSMK31114**	**2OSMK31120**
2OSMK33102	**2OSMK33108**	**2OSMK33114**	**2OSMK33120**
2OSMK27105	**2OSMK27111**	**2OSMK27117**	
2OSMK30105	**2OSMK30111**	**2OSMK30117**	
2OSMK31105	**2OSMK31111**	**2OSMK31117**	
2OSMK33105	**2OSMK33111**	**2OSMK33117**	

© Copyright StarMark Cabinetry MARCH 2021

Block 6045 Flush Microwave and Single Oven with Warming Drawer

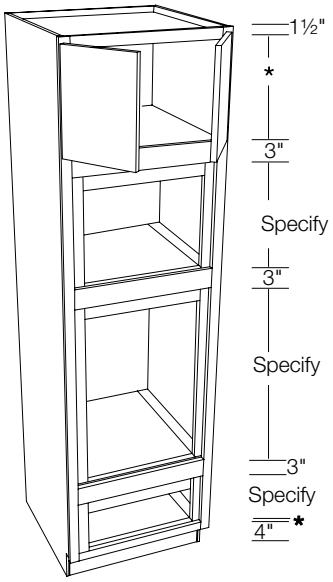

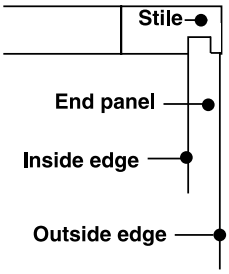

Butt Doors	Butt Doors	Butt Doors
2OCMWF2781	**2OCMWF2787**	**2OCMWF2793**
2OCMWF3081	**2OCMWF3087**	**2OCMWF3093**
2OCMWF3181	**2OCMWF3187**	**2OCMWF3193**
2OCMWF3381	**2OCMWF3387**	**2OCMWF3393**
2OCMWF2784	**2OCMWF2790**	**2OCMWF2796**
2OCMWF3084	**2OCMWF3090**	**2OCMWF3096**
2OCMWF3184	**2OCMWF3190**	**2OCMWF3196**
2OCMWF3384	**2OCMWF3390**	**2OCMWF3396**

DESIGN CONSIDERATIONS

81", 84", 87", 90", 93", 96" High - 24" Deep

- The toe kick for 96" high cabinet is sent loose. Please specify in your order if you want the toe kick factory applied.
- Door and drawer openings may be affected by cut-outs.
- End panels are shifted to outside frame edge, eliminating ¼" reveal. End panels are not flush. See detail.
- Specifically designed for the Wolf inset ovens
- Finished veneer interior
- Secondary frame for oven to set flush with the main cabinet frame.

HOW TO ORDER

✪ To order this item, you must fill out and send an Appliance Template with the order.

- Maximum width cutout is 2" less than overall width of cabinet
- Pricing P-239

Height of top opening	Number of shelves
21"	1
24"	2
27"	2
30"	2
33"	2
36"	3
39"	3

INSTALLATION TIP

On 96" high units, stand unit up then slide toe kick in from the back and slide against the wall at the same time. Note that the toe kick will be narrower than the cabinet's overall width, allowing for a recessed toe on one side.

NOTES/CAUTION

- On beaded inset face frames, the appliance opening has a flush face frame unless specified otherwise by a drawing.

© Copyright StarMark Cabinetry MARCH 2021

Block 6050 Microwave Oven

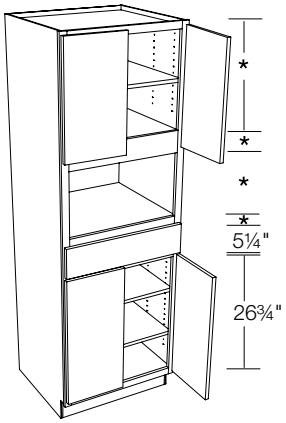

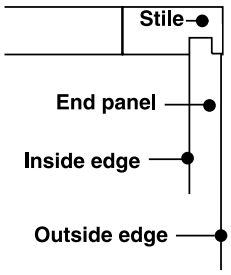

Butt Doors	Butt Doors
2OCM2781	**2OCM2790**
2OCM3081	**2OCM3090**
2OCM2784	**2OCM2793**
2OCM3084	**2OCM3093**
2OCM2787	**2OCM2796**
2OCM3087	**2OCM3096**

DESIGN CONSIDERATIONS

81", 84", 87", 90", 93", 96" High - 24" Deep

- 2 full depth adjustable shelves in bottom opening
- The toe kick for 96" high cabinet is sent loose. Please specify in your order if you want the toe kick factory applied.
- Door and drawer openings may be affected by cut-outs.
- End panels are shifted to outside frame edge, eliminating ¼" reveal. End panels are not flush. See detail.

HOW TO ORDER

✪ To order this item, you must fill out and send an Appliance Template with the order.

- Maximum width cutout is 2" less than overall width of cabinet
- Pricing P-240

Height of top opening	Number of shelves*
21"	1
24"	2
27"	2
30"	2
33"	2
36"	3
39"	3

* In addition to two shelves in lower opening

INSTALLATION TIP

On 96" high units, stand unit up then slide toe kick in from the back and slide against the wall at the same time. Note that the toe kick will be narrower than the cabinet's overall width, allowing for a recessed toe on one side.

NOTES/CAUTION

- On beaded inset face frames, the appliance opening has a flush face frame unless specified otherwise by a drawing.

Block 6100 Microwave Cook Center

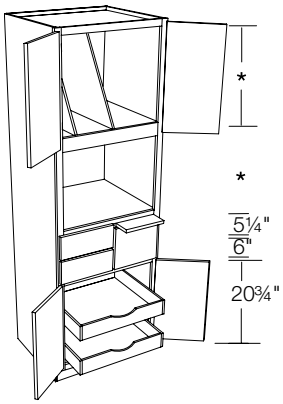

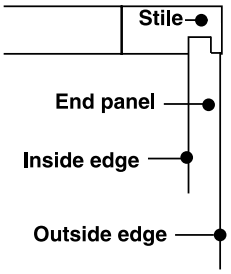

Butt Doors	Butt Doors
2MCC2781	**2MCC2790**
2MCC3081	**2MCC3090**
2MCC2784	**2MCC2793**
2MCC3084	**2MCC3093**
2MCC2787	**2MCC2796**
2MCC3087	**2MCC3096**

DESIGN CONSIDERATIONS

81", 84", 87", 90", 93", 96" High - 24" Deep

- No shelf on top, 2 tray dividers
- 2 wood adjustable roll out trays on bottom
- The toe kick for 96" high cabinet is sent loose. Please specify in your order if you want the toe kick factory applied.
- Door and drawer openings may be affected by cut-outs.
- End panels are shifted to outside frame edge, eliminating ¼" reveal. End panels are not flush. See detail.

HOW TO ORDER

✪ To order this item, you must fill out and send an Appliance Template with the order.

- Maximum width cutout is 2" less than overall width of cabinet
- Specify tray dividers left (**TDL**) or right (**TDR**)
- Specify wood bread board left (**BBL**) or right (**BBR**)
- Pricing P-240

INSTALLATION TIP

- On 96" high units, stand unit up then slide toe kick in from the back and slide against the wall at the same time. Note that the toe kick will be narrower than the cabinet's overall width, allowing for a recessed toe on one side.
- If using decorative hardware, allow extra clearance when installing next to a wall.

NOTES/CAUTION

- On beaded inset face frames, the appliance opening has a flush face frame unless specified otherwise by a drawing.

© Copyright StarMark Cabinetry MARCH 2021

THIS PAGE INTENTIONALLY LEFT BLANK

© Copyright StarMark Cabinetry MARCH 2021

Index

Description	Nomenclature	Page
Base One Drawer with Wide Bottom Rail	BW1D	C-261
Base Window Chest	BWC	C-260
Base with Full Height Door and Wide Bottom Rail	BFW	C-262
Base with Wide Bottom Rail	BW	C-262
Blind Corner Window Chest	BCWC	C-260
Chest of Drawers with Wide Bottom Rail	C6DW	C-267
Console Bookcase Deep with Wide Bottom Rail	CBCB	C-273
Console Bookcase with Wide Bottom Rail	CBC	C-272
Console Bookcase with Wide Bottom Rail	CCF	C-272
Desk Base	DDB	C-267
Desk Base with Wide Bottom Rail	DDBW	C-267
Desk Drawer	DKV	C-264
Desk Drawer Base	D3D	C-266
Desk Drawer with Wide Bottom Rail	D3DW	C-266
Desk File Drawer Base	FDBU	C-265
Desk File Drawer Base with Wide Bottom Rail	FDBUW	C-266
Drawer Base with Wide Bottom Rail	DBW	C-263
File Two Drawer Base	F2DB	C-265
Fireplace Surround with ADIP Facia - Arched Valance	FPAPA	C-275
Fireplace Surround with ADIP Facia - Square Valance	FPAPS	C-275
Fireplace Surround with Post Options	FPPST	C-276
Hutch Base with Wide Bottom Rail	HBW	C-263
Hutch Wall	WHW	C-259
Mantel	MTL	C-274
Mantel with SSTK and Crown Moulding	MTCRN	C-275
Mantel with SSTK and PSH Top and Bottom	MTPS	C-274
Mantel with Stacked SSTK	MTSS	C-274
Media Center with Roll Out Shelves and Wide Bottom Rail	MXW	C-264
Music Center with Roll Out Shelves and Wide Bottom Rail	MXRW	C-264
Pull Out Keyboard	POK	C-265
Tall Chest of Drawers with Wide Bottom Rail	C4DW	C-268
Tall Chest of Drawers with Wide Bottom Rail	C8DW	C-268
Tall Locker	TLKR	C-271
Tall Locker Stacked	TLSCK	C-271
Tall with Drawers and Wide Bottom Rail	TC3DW	C-270
Tall with Wide Bottom Rail	TCW	C-270
Tall with Wide Bottom Rail	TWCW	C-269
Wall Base with Wide Bottom Rail	WBW	C-261
Wall Locker	WLKR	C-259
Wall Locker Stacked	WLSCK	C-259
Wood Top	Wood top	C-260

© Copyright StarMark Cabinetry FEBRUARY 2022

Index

Description	Nomenclature	Page	Description	Nomenclature	Page

© Copyright StarMark Cabinetry FEBRUARY 2022

✪ Cabinets in this section are meant for home offices, libraries and other areas of the home. The wide bottom rail lends a furniture look to these cabinets. If these cabinets are used in kitchens or vanities, please note that the doors and drawers will not align with the doors and drawers of kitchen and vanity cabinets.

✪ Note that some file drawers and desk cabinets have a toe kick. This will not align with the wide bottom rail of most Other Room cabinets.

Standards for Single Door Other Room Cabinets

○ Depth is 21″. Depths of 18″ and 24″ are available and must be specified.

○ Height of tall cabinets is 81″ or 82½″

○ Height of base cabinets is 28½″, 31½″, 33″, 40½″, or 42″.

○ Toe Kick height is 4″ where applicable

○ Toe Kick recess is 2⅝″ where applicable

○ Wide bottom rails are 3″ or 4½″.

○ Vertical stiles on the cabinet frame are 1½″ wide.

○ Horizontal rails on the cabinet frame are 1½″ high or 3″.

○ **Mortise and tenon doors greater than 42″ high will have a center rail.**

○ Arched door styles are NOT available in Other Room base cabinets.

○ To compute the door/drawer opening width on a **Single Door** standard cabinet, subtract 3″ from cabinet width.

○ Mitered doors that are 42″ or higher will receive a single panel door.

Standards for Double Door Other Room Cabinets

○ Depth is 21″. Depths of 18″ and 24″ are available and must be specified.

○ Height of tall cabinets is 81″ or 82½″

○ Height of base cabinets is 28½″, 31½″, 33″, 40½″, or 42″.

○ Wide bottom rails are 3″ or 4½″. These wide bottom rails will not align with kitchen or vanity cabinets modified with a wide bottom rail.

○ Toe Kick height is 4″ where applicable

○ Toe Kick recess is 2⅝″ where applicable

○ Vertical stiles on the cabinet frame are 1½″ wide.

○ Horizontal rails on the cabinet frame are 1½″ high or 3″.

○ Arched door styles are NOT available in Other Room base cabinets.

○ Vertical center mullions are 3″ wide.

○ A prefix of “2” denotes a cabinet built with butt doors. The cabinet is considered “full access” because there is no center mullion.

○ Butt doors are not available in cabinets that are wider than 36″. Cabinets wider than 36″ will have a fixed center mullion. A fixed center mullion is necessary for stability.

○ Butt door cabinets have full width drawers.

○ **Mortise and tenon doors greater than 42″ high will have a center rail.**

○ To compute the width of a door opening on a **Double Door** standard Other Room cabinet, subtract 6″ from the individual width and divide by 2.

○ To compute the width of a door opening on a **Butt Door** standard Other Room cabinet, subtract 3″ from the individual width. Subtract 3″ from the cabinet height to obtain the height opening.

© Copyright StarMark Cabinetry FEBRUARY 2022

OTHER ROOM CABINETS

Alignment, Standards and Dimensions

STARMARK CABINETRY

Other Room Cabinet Frame Opening Alignment

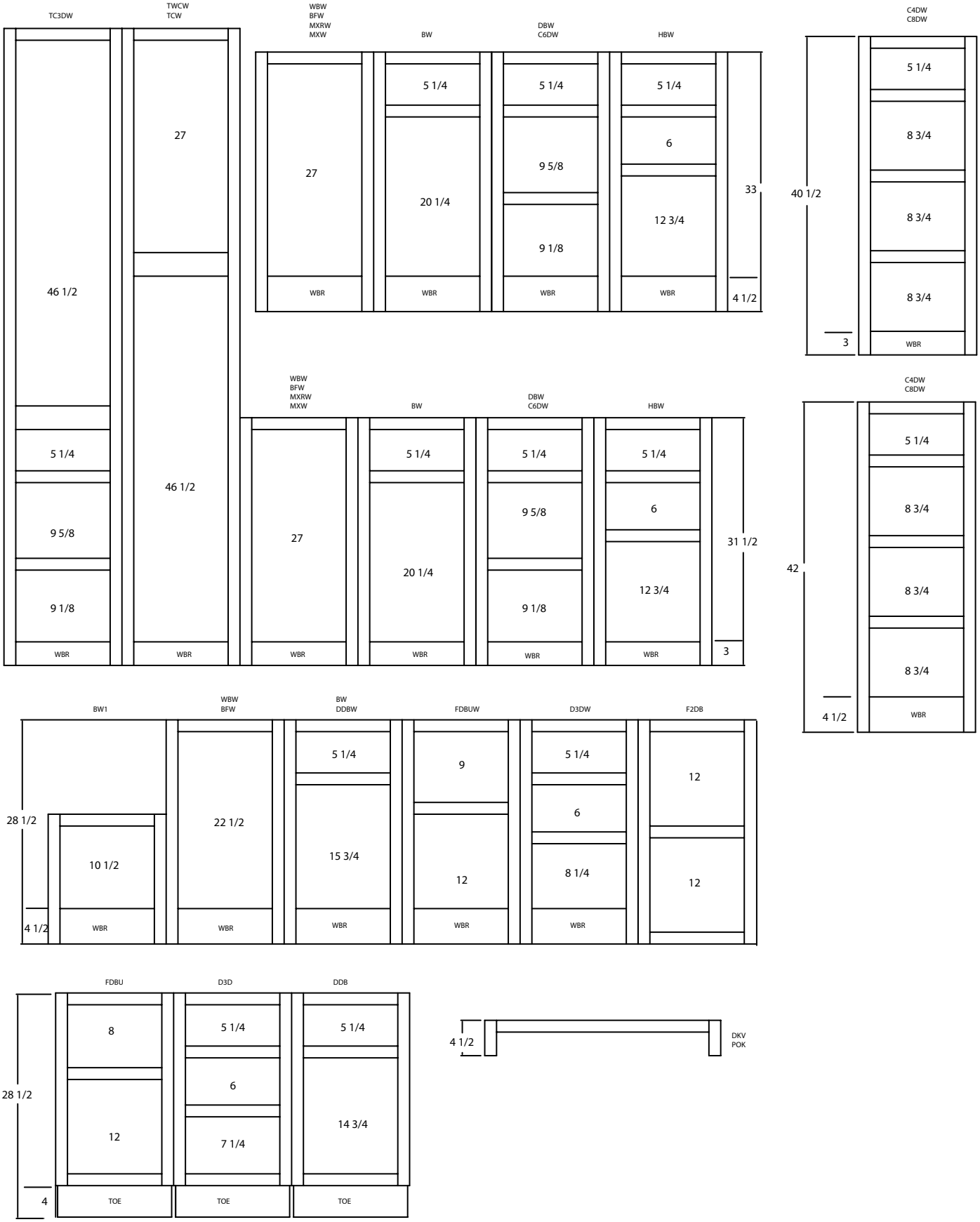

© Copyright StarMark Cabinetry FEBRUARY 2022

I available in Inset cabinetry

Face Frame Dimensions for Other Room Cabinets

HEIGHT OF CABINET	HEIGHT OF BOTTOM RAIL
28½″	4½″
31½″	3″
33″	4½″
40½″	3″
42″	4½″
81″	3″
82½″	4½″

○ Nomenclature indicates width by height unless otherwise indicated. Example:

BW1833
B - base cabinet
W - wide bottom rail
18 - 18″ wide
33 - 33″ high

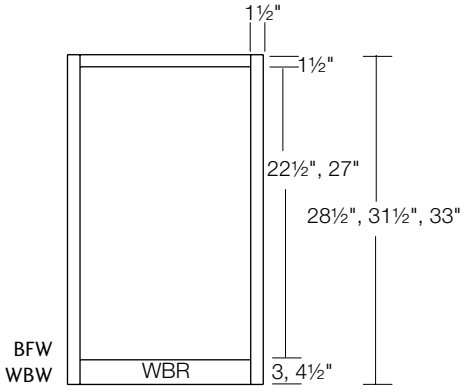

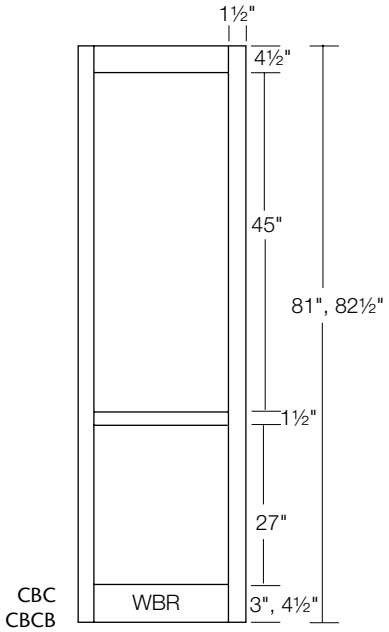

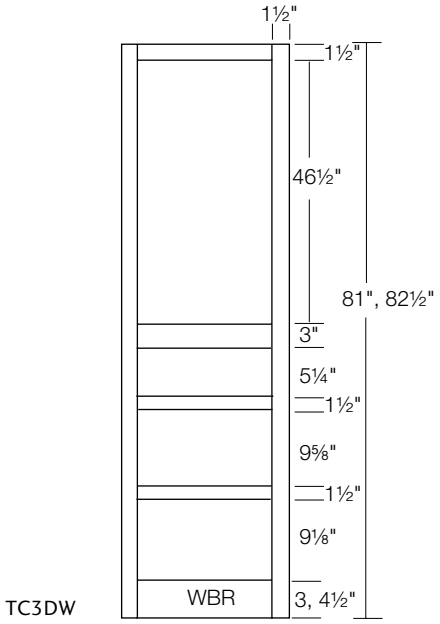

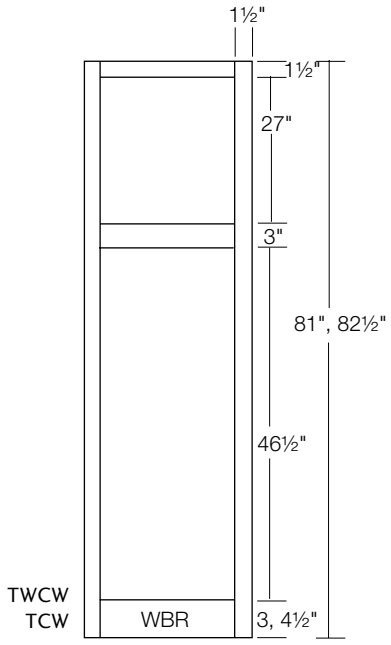

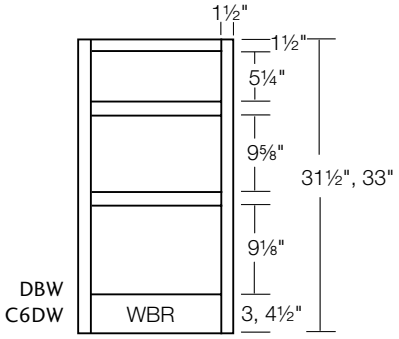

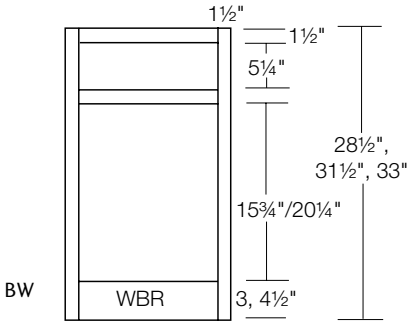

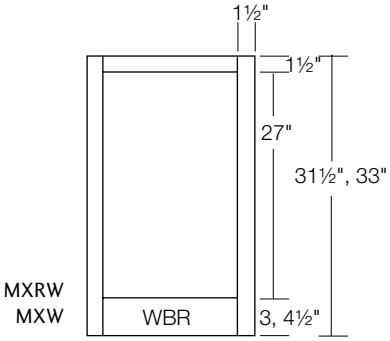

© Copyright StarMark Cabinetry FEBRUARY 2022

Other Room Cabinet Door and Drawer Alignment

Modern Overlay

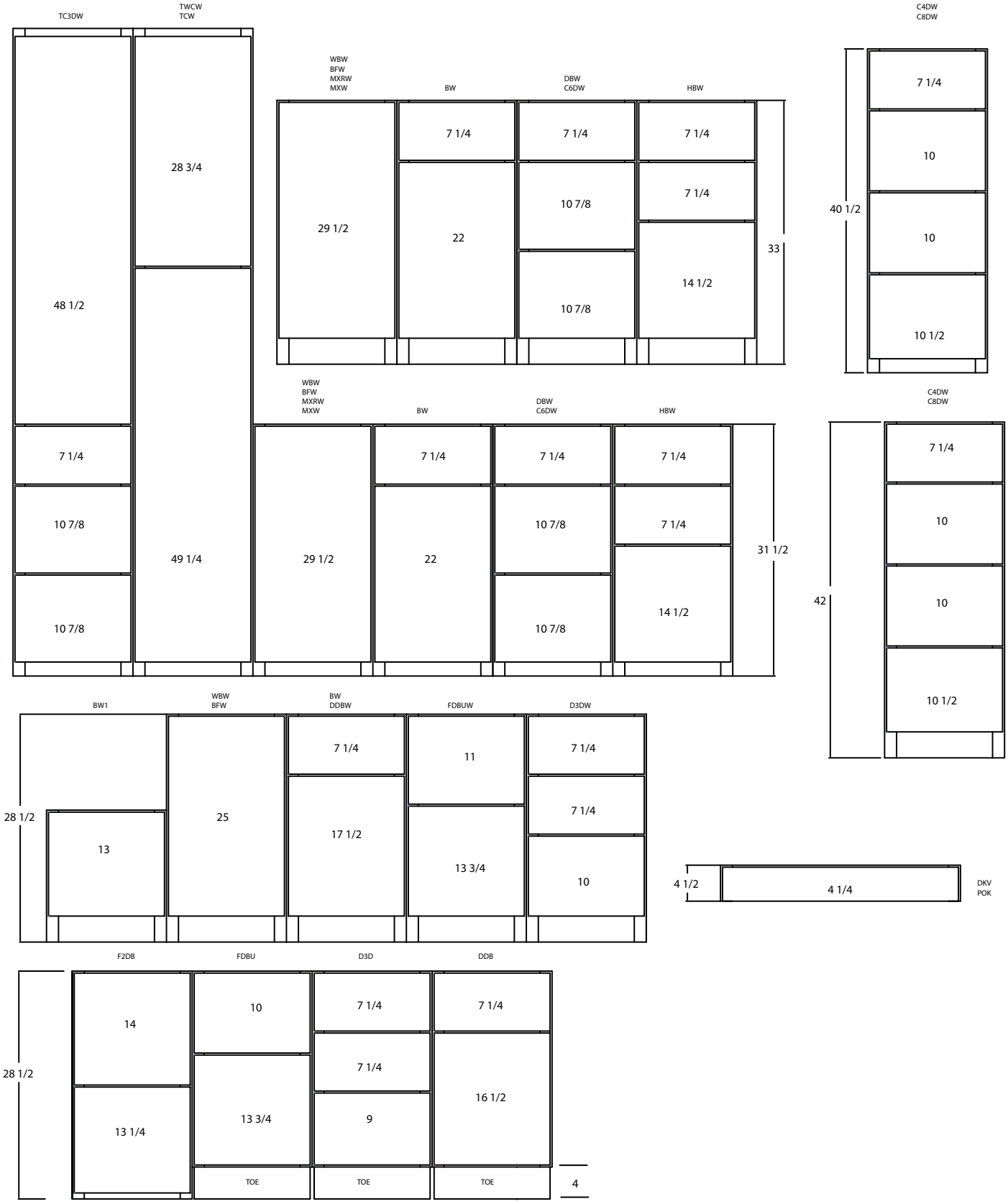

© Copyright StarMark Cabinetry FEBRUARY 2022

Other Room Cabinet Door and Drawer Alignment

Traditional Overlay

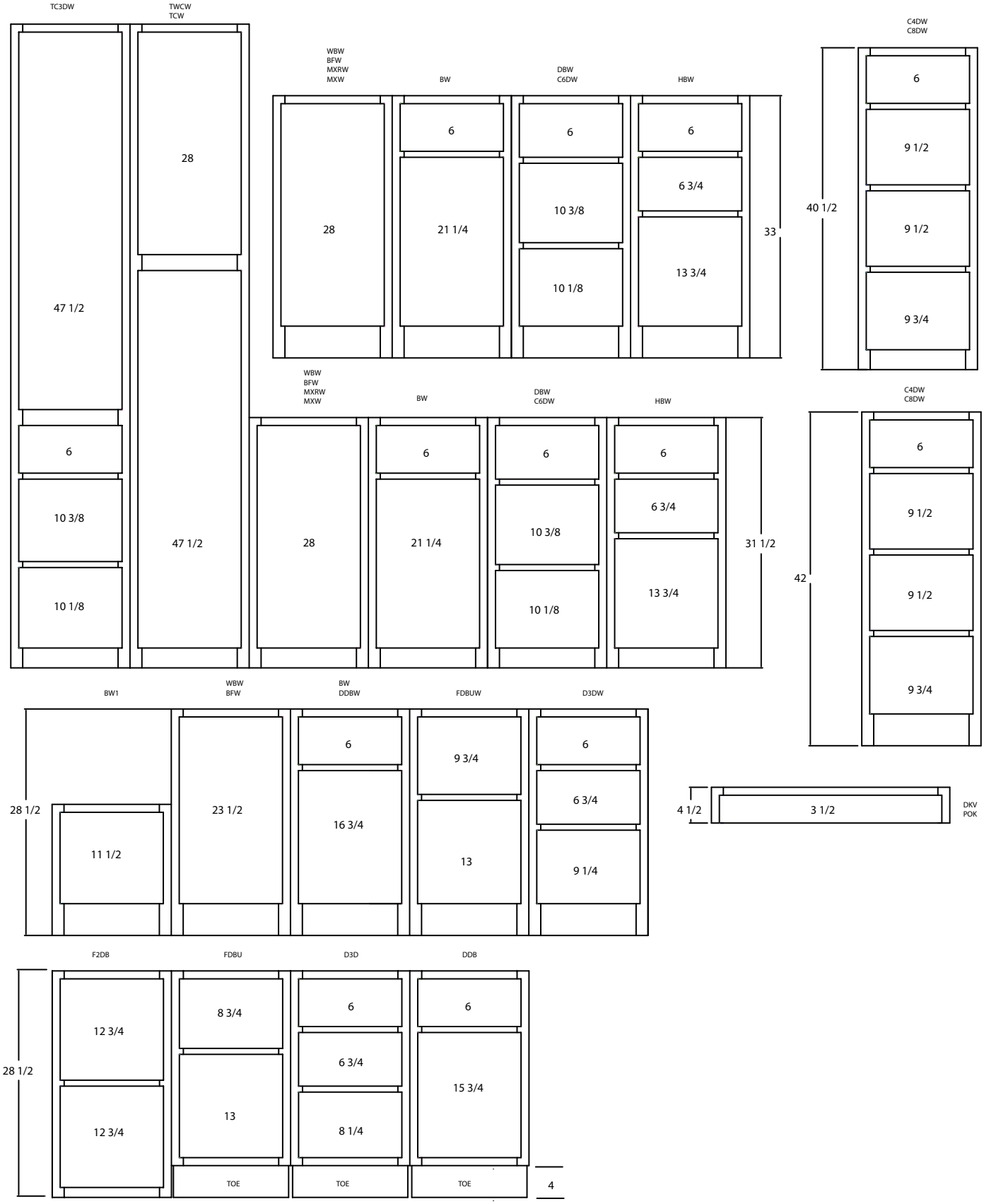

© Copyright StarMark Cabinetry FEBRUARY 2022

Other Room Locker Cabinet Alignment

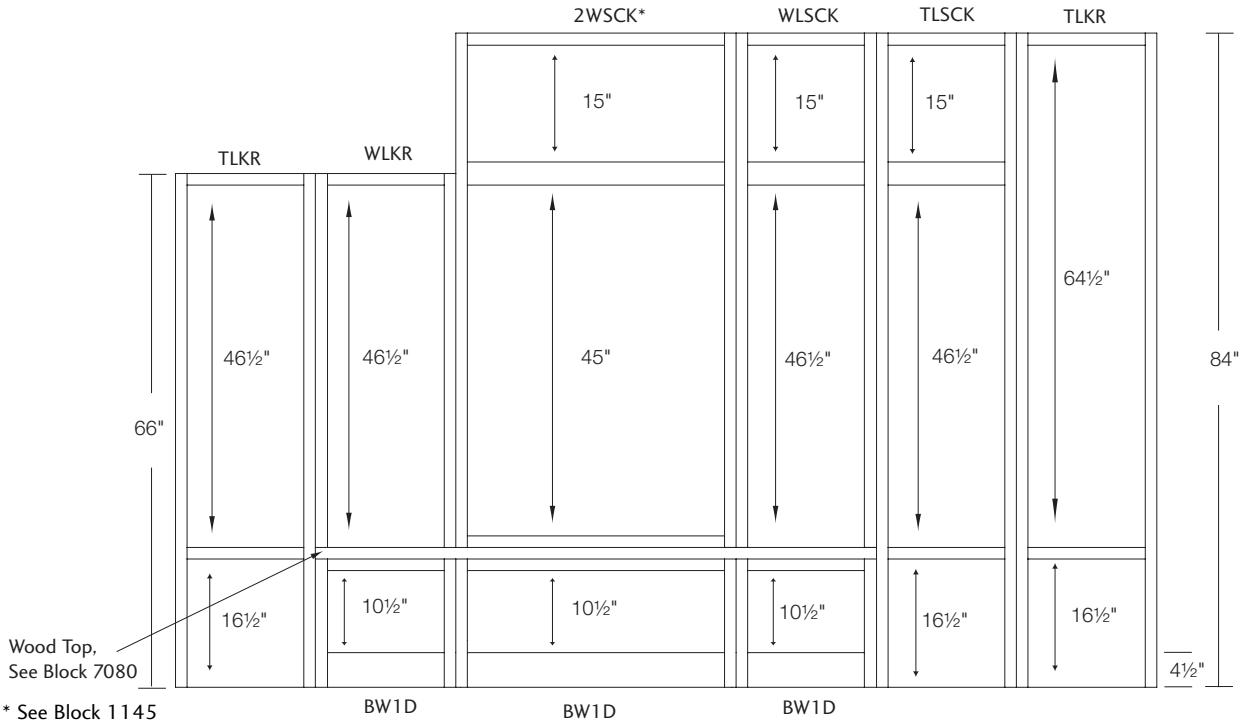

Standards for Single Door Locker Cabinets

- Depth is 12".
- Height of tall cabinets is 66" or 84".
- Height of base cabinets is 16½".
- Wide bottom rails are 4½".
- Height of wall cabinets is 48"or 66".
- Vertical stiles on the cabinet frame are 1½" wide.
- Horizontal rails on the cabinet frame are 1½" high or 3".
- To compute the door/drawer opening width on a **Single Door** standard cabinet, subtract 3" from cabinet width.

Standards for Double Door Locker Cabinets

- Depth is 12".
- Height of tall cabinets is 66" or 84".
- Vertical stiles on the cabinet frame are 1½" wide.
- Horizontal rails on the cabinet frame are 1½" high or 3".
- Height of wall cabinets is 48"or 66".
- A prefix of "2" denotes a cabinet built with butt doors. The cabinet is considered "full access" because there is no center mullion.
- Locker Cabinets 30", 33", or 36" wide have a 2" center stile in the locker area.
- To compute the width of a door opening on a **Butt Door** standard Other Room cabinet, subtract 3" from the individual width.
- Opening height for doors on Locker cabinets is 15".

© Copyright StarMark Cabinetry FEBRUARY 2022

Face Frame Dimensions for Other Room Locker Cabinets

HEIGHT OF CABINET	HEIGHT OF BOTTOM RAIL
16½"	4½"

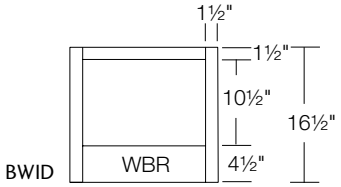

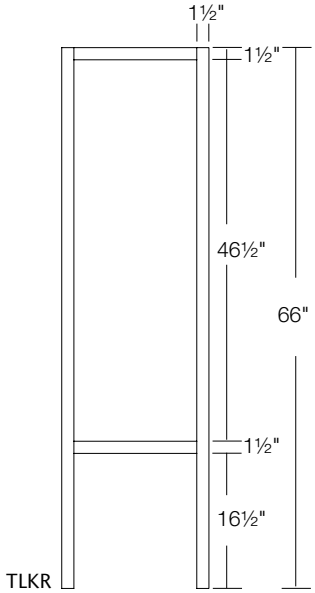

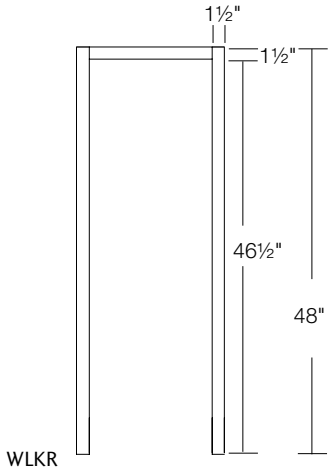

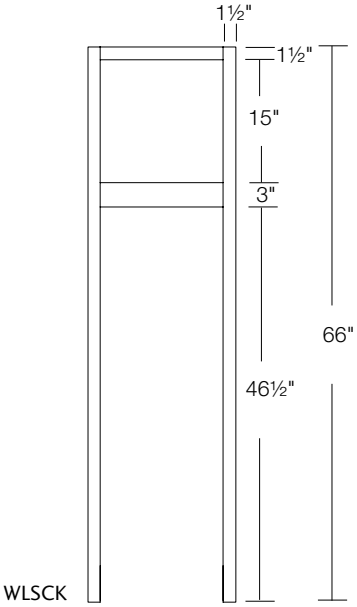

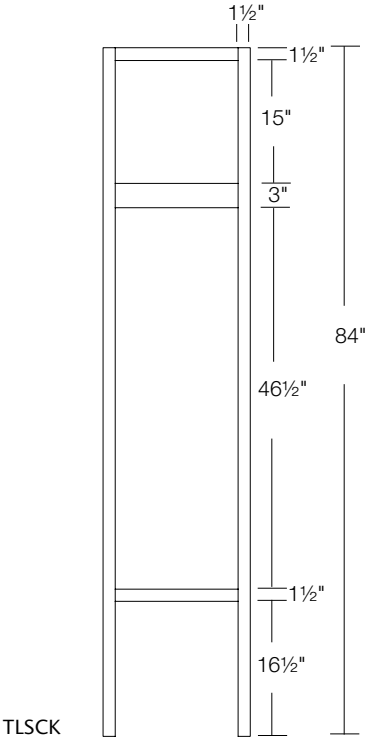

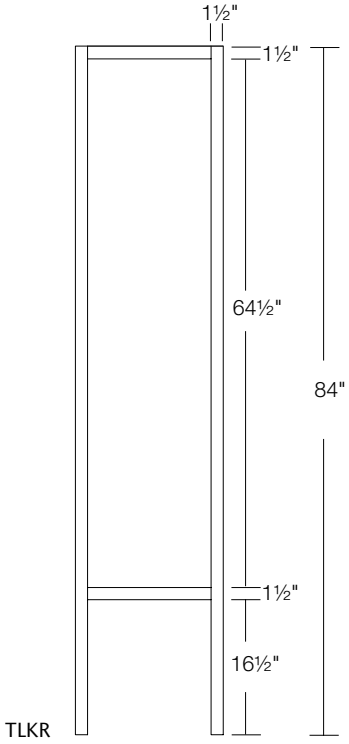

© Copyright StarMark Cabinetry FEBRUARY 2022

THIS PAGE INTENTIONALLY LEFT BLANK

© Copyright StarMark Cabinetry **FEBRUARY 2022**

Block 7000 Hutch Wall

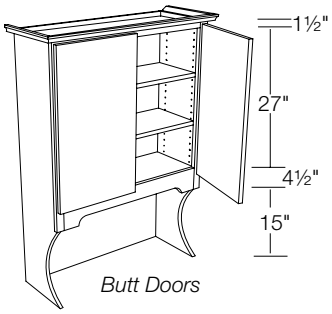

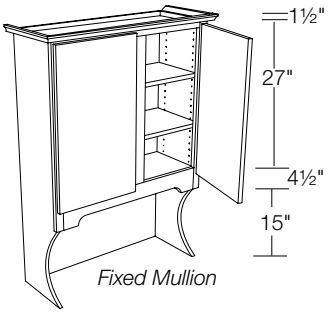

Butt Doors
2WHW3048
2WHW3648

Fixed Mullion
WHW4248
WHW4848

DESIGN CONSIDERATIONS
48" High - 12" Deep
- 2 adjustable shelves
- ¾" solid wood finished end panels
- Finished veneer interior
- 49" high when moulding is applied
- Includes crown moulding (CM8) applied

HOW TO ORDER
- Pricing P-241

INSTALLATION TIP
Cabinet meant to stand alone, not intended to be installed next to other cabinets

Block 7025 Wall Locker

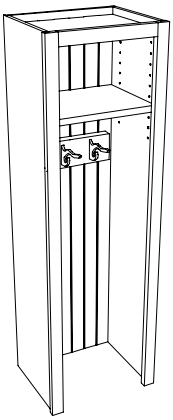

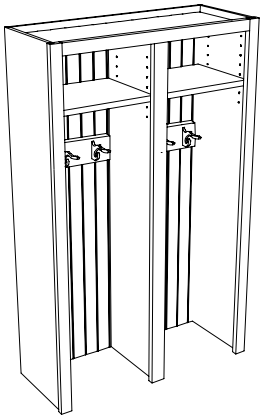

WLKR1548
WLKR1848
WLKR2148
WLKR2448
WLKR2748

WLKR3048
WLKR3348
WLKR3648

DESIGN CONSIDERATIONS
48" High - 12" Deep
- Adjustable shelves. See chart for quantities.
- Beaded back
- Finished veneer interior
- Solid wood mounting bracket with 2 black hooks. Brackets sent loose for field installation, see chart for quantities.
- 30", 33", 36" wide have 2" wide center stile with a partition

HOW TO ORDER
- Pricing P-241

Width	
15", 18", 21", 24", 27"	1 shelf, 1 bracket, 2 hooks
30", 33", 36"	2 shelves, 2 brackets, 4 hooks

INSTALLATION TIP
We recommend anchoring the bottom of the frame to maintain squareness of cabinet.

Block 7030 Wall Locker Stacked

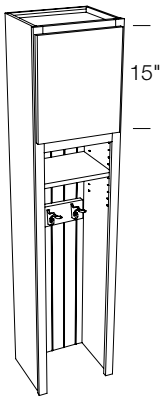

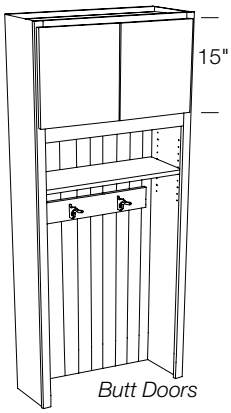

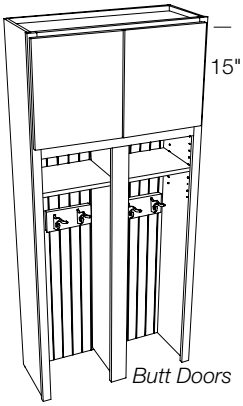

Single Door
WLSCK1566
WLSCK1866
WLSCK2166
WLSCK2466

Butt Doors
2WLSCK2466
2WLSCK2766

Butt Doors
2WLSCK3066
2WLSCK3366
2WLSCK3666

DESIGN CONSIDERATIONS
66" High - 12" Deep
- Adjustable shelves. See chart for quantities.
- Beaded back
- Finished veneer interior
- Solid wood mounting bracket with 2 black hooks. Brackets sent loose for field installation, see chart for quantities.
- 30", 33", 36" wide have 2" wide center stile with a partition

HOW TO ORDER
- Specify **L** or **R** hinging on Single Door cabinet
- Pricing P-242

Width	
15", 18", 21", 24", 27"	1 shelf, 1 bracket, 2 hooks
30", 33", 36"	2 shelves, 2 brackets, 4 hooks

INSTALLATION TIP
We recommend anchoring the bottom of the frame to maintain squareness of cabinet.

© Copyright StarMark Cabinetry FEBRUARY 2022

Block 7060 Blind Corner Window Chest

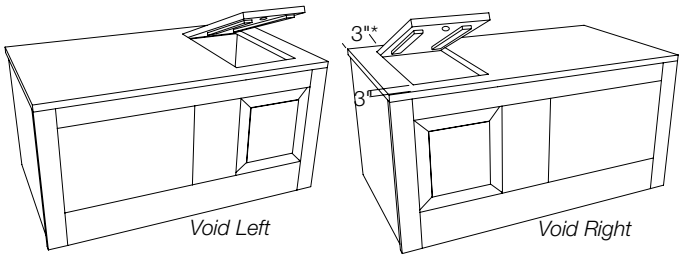

* 3" unless an Extended Stile is specified.Then it increases with the Extended Stile.

BCWC3618VL
BCWC3618VR
BCWC3918VL
BCWC3918VR
BCWC4218VL
BCWC4218VR
BCWC4518VL
BCWC4518VR
BCWC4818VL
BCWC4818VR

DESIGN CONSIDERATIONS

18" High - 21" Deep

- Concealed hinge with soft close for top standard on overlay and inset orders.
- ADIP front standard on overlay and inset orders.
- For mitered doors, the ADIP front will be the best match for the center panel.
- Solid wood top
- 1" diameter finger hole to open top
- Available in all door styles except slab.
- Cabinet has panel over void area.
- 4½" WBR

HOW TO ORDER

- Specify **VL** (void left) or **VR** (void right)
- Pricing P-242

Block 7062 Base Window Chest

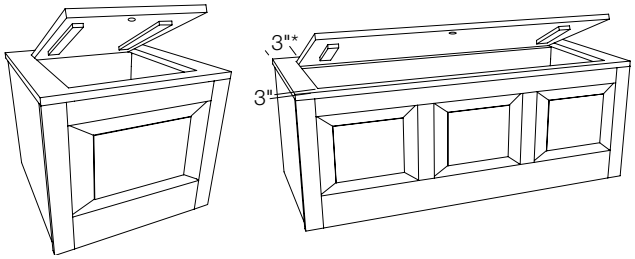

* 3" unless an Extended Stile is specified.Then it increases with the Extended Stile.

BWC2118

BWC2418
BWC2718
BWC3018
BWC3318
BWC3618
BWC3918

BWC4218
BWC4518
BWC4818

DESIGN CONSIDERATIONS

18" High - 21" Deep

- Concealed hinge with soft close for top standard on overlay and inset orders.
- ADIP front standard on overlay and inset orders.
- For mitered doors, the ADIP front will be the best match for the center panel.
- Solid wood top
- 1" diameter finger hole to open top
- Available in all door styles except slab.
- See chart for number of panel inserts
- 4½" WBR

HOW TO ORDER

- Pricing P-243

Cabinet Width	Number of panel inserts
21"	1
24", 27", 30",	2
33", 36", 39"	2
42", 45", 48"	3

Block 7080 Wood Top

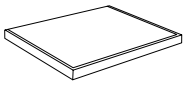

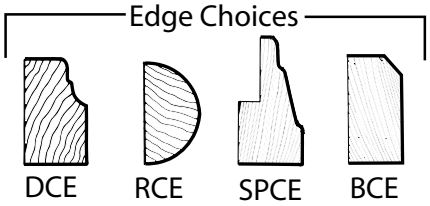

Alder, Cherry, Hickory, Maple, Oak, Walnut
Wood top per square foot

DESIGN CONSIDERATIONS

- Maximum depth is 48"
- Maximum width is 96"
- Use Alder for Rustic Alder cabinetry.
- Use Hickory for Rustic Hickory cabinetry.
- Use Oak for Quarter Sawn Oak Cabinetry.

HOW TO ORDER

- Square foot pricing
- Specify **edge choice.** Illustrated at left.
- Specify finished size as **depth** by **width**
- Specify **sides** to be edged
- Example: wood top bce 25"x49" f, l, r
- Pricing P-243

© Copyright StarMark Cabinetry FEBRUARY 2022

Block 7090 Base One Drawer with Wide Bottom Rail (WBR)

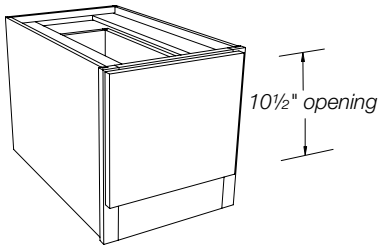

BW1D15
BW1D18
BW1D21
BW1D24
BW1D27
BW1D30
BW1D33
BW1D36

DESIGN CONSIDERATIONS

16½" High - 21" Deep

- 18" and 24" deep are available at no additional charge -must specify when ordering
- 4½" WBR

HOW TO ORDER

- Specify depth
- Pricing P-243

Block 7100 Wall Base with Wide Bottom Rail (WBR)

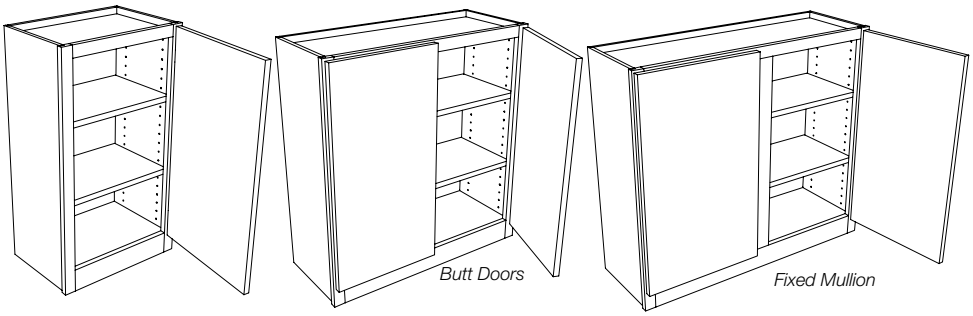

Single Door	Butt Doors	Fixed Mullion
WBW1828	**2WBW2428**	**WBW3628**
WBW2428	**2WBW2728**	**WBW4228**
	2WBW3028	**WBW4828**
	2WBW3628	
WBW1831	**2WBW2431**	**WBW3631**
WBW2431	**2WBW2731**	**WBW4231**
	2WBW3031	**WBW4831**
	2WBW3631	
WBW1833	**2WBW2433**	**WBW3633**
WBW2433	**2WBW2733**	**WBW4233**
	2WBW3033	**WBW4833**
	2WBW3633	

DESIGN CONSIDERATIONS

28½", 31½", 33" High - 12" Deep

- 28½" has 4½" WBR
- 31½" has 3" WBR
- 33" has 4½" WBR
- 2 adjustable full depth shelves

HOW TO ORDER

- Specify **L** or **R** hinging on Single Door cabinet
- Pricing P-244

© Copyright StarMark Cabinetry **FEBRUARY 2022**

Block 7110 Base with Full Height Door and Wide Bottom Rail (WBR) I

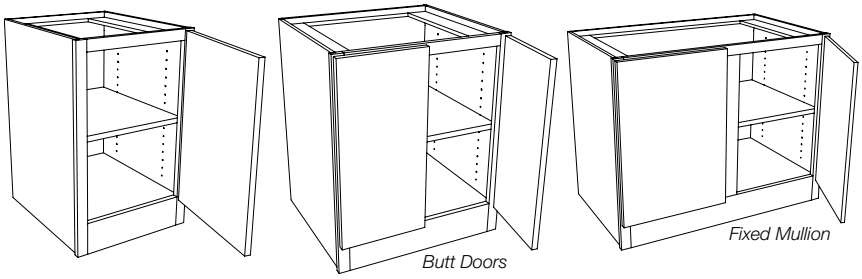

Single Door	Butt Doors	Fixed Mullion
BFW1828	**2BFW2428**	**BFW3628**
BFW2428	**2BFW2728**	**BFW4228**
	2BFW3028	**BFW4828**
	2BFW3628	
BFW1831	**2BFW2431**	**BFW3631**
BFW2431	**2BFW2731**	**BFW4231**
	2BFW3031	**BFW4831**
	2BFW3631	
BFW1833	**2BFW2433**	**BFW3633**
BFW2433	**2BFW2733**	**BFW4233**
	2BFW3033	**BFW4833**
	2BFW3633	

DESIGN CONSIDERATIONS

28½", 31½", 33" High - 21" Deep

- 18" and 24" deep are available at no additional charge – must specify when ordering
- 28½" has 4½" WBR
- 31½" has 3" WBR
- 33" has 4½" WBR
- 1 adjustable full depth shelf

HOW TO ORDER

- Specify **L** or **R** hinging on Single Door cabinet
- Specify depth
- Pricing P-244-245

Block 7120 Base with Wide Bottom Rail (WBR) I

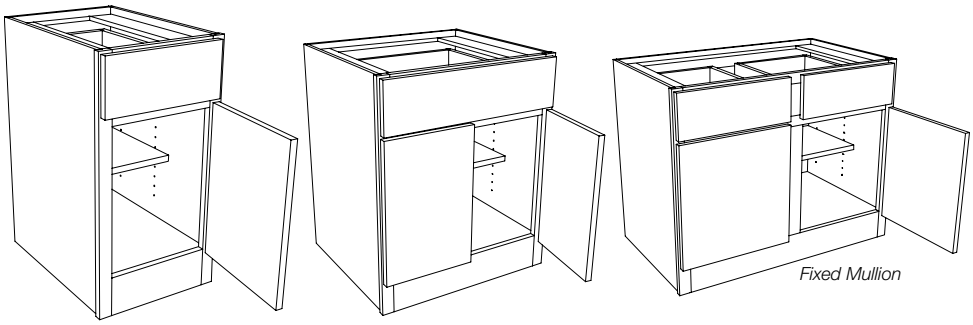

Single Door	Butt Doors	Fixed Mullion
BW1528	**2BW2428**	**BW3628**
BW1828	**2BW2728**	**BW4228**
BW2428	**2BW3028**	**BW4828**
	2BW3628	
BW1531	**2BW2431**	**BW3631**
BW1831	**2BW2731**	**BW4231**
BW2431	**2BW3031**	**BW4831**
	2BW3631	
		BW3033
BW1533	**2BW2433**	**BW3633**
BW1833	**2BW2733**	**BW4233**
BW2433	**2BW3033**	**BW4833**
	2BW3633	

DESIGN CONSIDERATIONS

28½", 31½", 33" High - 21" Deep

- 18" and 24" deep are available at no additional charge – must specify when ordering
- 28½" has 4½" WBR
- 31½" has 3" WBR
- 33" has 4½" WBR
- 1 adjustable ⅔ depth shelf

HOW TO ORDER

- Specify **L** or **R** hinging on Single Door cabinet
- Specify depth
- Pricing P-245-246

© Copyright StarMark Cabinetry FEBRUARY 2022

Block 7130 Drawer Base with Wide Bottom Rail (WBR)

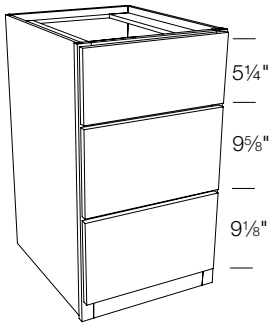

DESIGN CONSIDERATIONS

31½", 33" High - 21" Deep

- 18" and 24" deep are available at no additional charge – must specify when ordering
- 31½" has 3" WBR
- 33" has 4½" WBR

HOW TO ORDER

- Specify depth
- Pricing P-246

DBW1831	**DBW1833**
DBW2131	**DBW2133**
DBW2431	**DBW2433**
DBW2731	**DBW2733**
DBW3031	**DBW3033**

Block 7140 Hutch Base with Wide Bottom Rail (WBR)

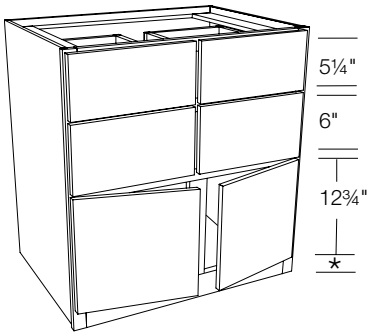

DESIGN CONSIDERATIONS

31½", 33" High - 21" Deep

- 18" and 24" deep are available at no additional charge – must specify when ordering
- 31½" has 3" WBR
- 33" has 4½" WBR

HOW TO ORDER

- Specify depth
- Pricing P-247

Fixed Mullion	Fixed Mullion
HBW3031	**HBW3033**
HBW3631	**HBW3633**
HBW3931	**HBW3933**
HBW4231	**HBW4233**
HBW4531	**HBW4533**
HBW4831	**HBW4833**

© Copyright StarMark Cabinetry **FEBRUARY 2022**

Block 7200 Music Center with Roll Out Shelves and Wide Bottom Rail (WBR) I

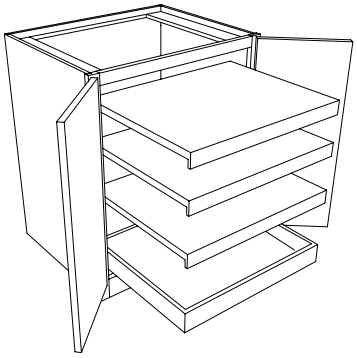

Butt Doors
2MXRW2731
2MXRW3031
2MXRW3331
2MXRW3631

Butt Doors
2MXRW2733
2MXRW3033
2MXRW3333
2MXRW3633

DESIGN CONSIDERATIONS

31½", 33" High - 21" Deep

- 18" and 24" deep are available at no additional charge – must specify when ordering
- 31½" has 3" WBR
- 33" has 4½" WBR
- 3 adjustable wood roll out shelves for electronics
- 1 adjustable roll out media storage tray

HOW TO ORDER

- Specify depth
- Pricing P-247

Block 7210 Media Center with Roll Out Shelves and Wide Bottom Rail (WBR) I

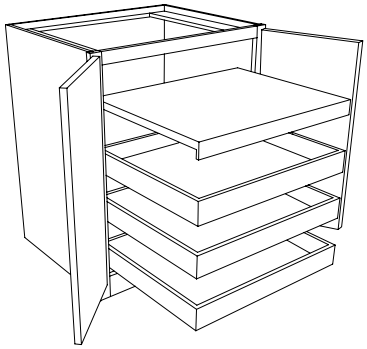

Butt Doors
2MXW2731
2MXW3031
2MXW3331
2MXW3631

Butt Doors
2MXW2733
2MXW3033
2MXW3333
2MXW3633

DESIGN CONSIDERATIONS

31½", 33" High - 21" Deep

- 18" and 24" deep are available at no additional charge – must specify when ordering
- 31½" has 3" WBR
- 33" has 4½" WBR
- 1 adjustable wood roll out shelf for electronics
- 3 adjustable roll out media storage trays

HOW TO ORDER

- Specify depth
- Pricing P-248

Block 7280 Desk Drawer I

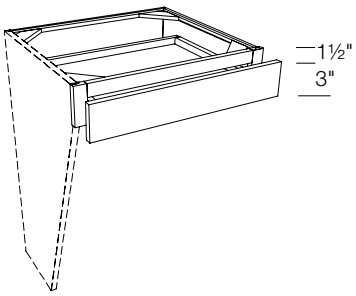

DKV2418
DKV2718
DKV3018
DKV3318
DKV3618

DKV2421
DKV2721
DKV3021
DKV3321
DKV3621

DKV2424
DKV2724
DKV3024
DKV3324
DKV3624

DESIGN CONSIDERATIONS

4½" High - 18", 21", 24" Deep

- Single drawer with glides
- Drawer cannot be trimmed
- Slab header with all door styles

HOW TO ORDER

- Order a tapered end panel if this drawer will be on the end of a run. See block 11850.
- Pricing P-248

© Copyright StarMark Cabinetry FEBRUARY 2022

Block 7285 Pull Out Keyboard

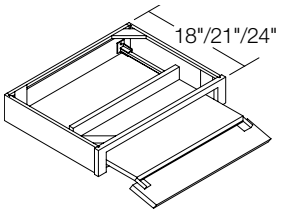

POK2418
POK3018
POK3618

POK2421
POK3021
POK3621

POK2424
POK3024
POK3624

DESIGN CONSIDERATIONS

4½" High - 18", 21", 24" Deep

- Tilt down header
- Reduce height modification not available
- Slab header with all door styles
- Maple keyboard shelf has Natural finish

HOW TO ORDER

- Order a tapered end panel if this drawer will be on the end of a run. See block 11850.
- Pricing P-249

Block 7290 File Two Drawer Base

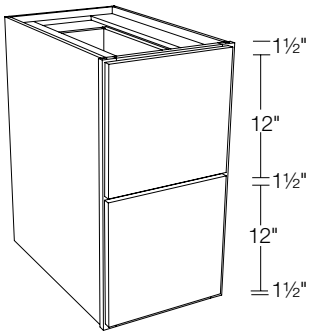

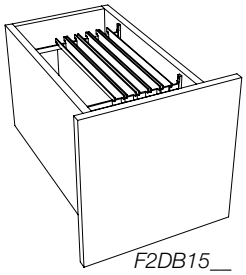

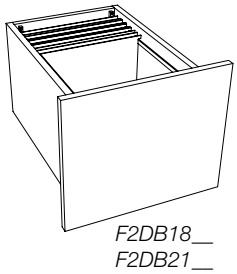

F2DB1518
F2DB1818
F2DB2118
F2DB1521

F2DB1821
F2DB2121
F2DB1524
F2DB1824

F2DB2124

DESIGN CONSIDERATIONS

28½" High - 18", 21", 24" Deep

- 18" for standard hanging folders
- 21" for legal size hanging folders
- F2DB1518 will not accommodate legal size hanging folders.
- 1½" bottom rail creates a ¾" reveal when drawer is closed
- The toe kick on this cabinet was eliminated to accommodate two file drawers while maintaining desk height.
- File folders shown in illustration are not included

HOW TO ORDER

- Pricing P-249

Block 7295 Desk File Drawer Base

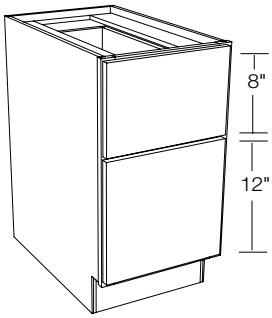

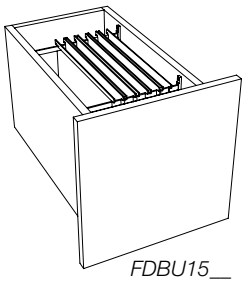

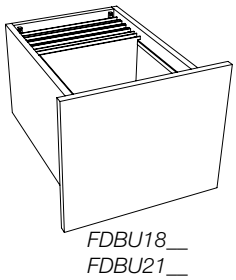

FDBU1518
FDBU1818
FDBU2118

FDBU1521
FDBU1821
FDBU2121

FDBU1524
FDBU1824
FDBU2124

DESIGN CONSIDERATIONS

28½" High - 18", 21", 24" Deep

- 18" for standard hanging folders
- 21" for legal size hanging folders
- FDBU1518 will not accommodate legal size hanging folders.
- File folders shown in illustration are not included
- Requires MTBT (block 12200)

HOW TO ORDER

- Pricing P-249

© Copyright StarMark Cabinetry FEBRUARY 2022

Block 7300 Desk File Drawer Base with Wide Bottom Rail (WBR)

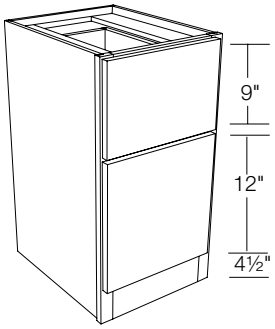

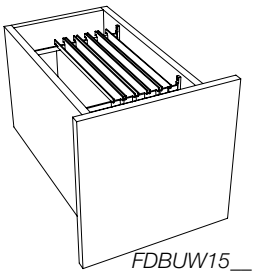

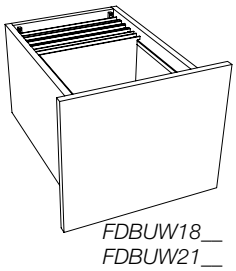

FDBUW1518
FDBUW1818
FDBUW2118

FDBUW1521
FDBUW1821
FDBUW2121

FDBUW1524
FDBUW1824
FDBUW2124

DESIGN CONSIDERATIONS

28½" High - 18", 21", 24" Deep

- 18" for standard hanging folders
- 21" for legal size hanging folders
- FDBUW1518 will not accommodate legal size hanging folders.
- File folders shown in illustration are not included

HOW TO ORDER

- Specify depth: i.e. Order as FDBUW1521 for 21" deep
- Pricing P-250

Block 7315 Desk Drawer Base

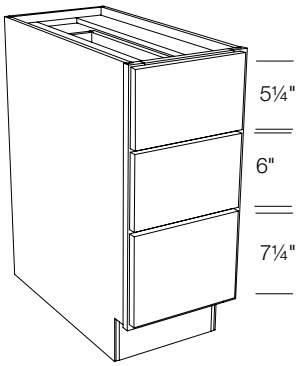

D3D1218
D3D1518
D3D1818
D3D2118
D3D2418

D3D1221
D3D1521
D3D1821
D3D2121
D3D2421

D3D1224
D3D1524
D3D1824
D3D2124
D3D2424

DESIGN CONSIDERATIONS

28 ½" High - 18", 21", 24" Deep

- Not for use with file folders
- Requires MTBT (block 12200)

HOW TO ORDER

- Pricing P-250

Block 7320 Desk Drawer with Wide Bottom Rail (WBR)

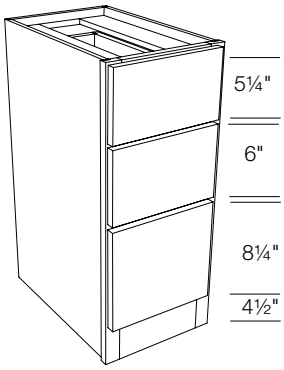

D3DW1218
D3DW1518
D3DW1818

D3DW1221
D3DW1521
D3DW1821

D3DW1224
D3DW1524
D3DW1824

DESIGN CONSIDERATIONS

28½" High - 18", 21", 24" Deep

- Not for use with file folders
- 4½" WBR

HOW TO ORDER

- Specify depth: i.e. Order as D3DW1518 for 18" deep
- Pricing P-251

© Copyright StarMark Cabinetry FEBRUARY 2022

Block 7325 Desk Base

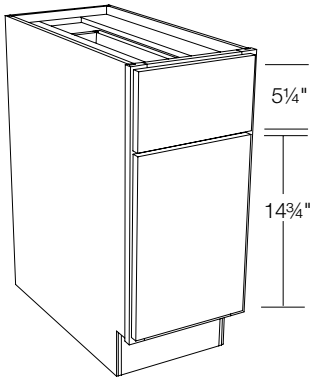

DESIGN CONSIDERATIONS

28½" High - 18", 21", 24" Deep

- No shelf
- Requires MTBT (block 12200)

HOW TO ORDER

- Specify **L** or **R** hinging
- Pricing P-251

DDB1218	**DDB1221**	**DDB1224**
DDB1518	**DDB1521**	**DDB1524**
DDB1818	**DDB1821**	**DDB1824**
DDB2118	**DDB2121**	**DDB2124**
DDB2418	**DDB2421**	**DDB2424**

Block 7330 Desk Base with Wide Bottom Rail (WBR)

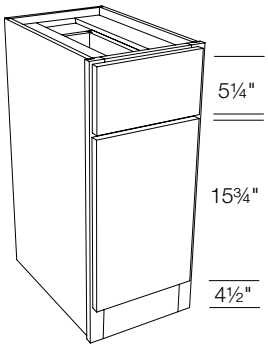

DESIGN CONSIDERATIONS

28½" High - 18", 21", 24" Deep

- No shelf
- 4½" WBR

HOW TO ORDER

- Specify **L** or **R** hinging
- Specify depth: i.e. Order as DDBW1218 for 18" deep
- Pricing P-252

DDBW1218	**DDBW1221**	**DDBW1224**
DDBW1518	**DDBW1521**	**DDBW1524**
DDBW1818	**DDBW1821**	**DDBW1824**

Block 7400 Chest of Drawers with Wide Bottom Rail (WBR)

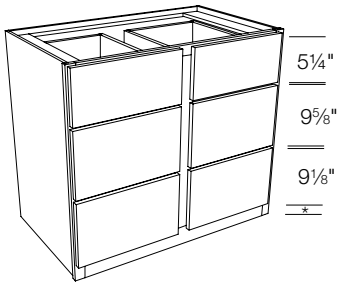

DESIGN CONSIDERATIONS

31½", 33" High - 21" Deep

- 18" and 24" deep are available at no additional charge – must specify when ordering
- 31½" has 3" WBR
- 33" has 4½" WBR
- For matching wood top, see block 7080
- Top drawer opening is 6" high. The drawer will not align with adjacent cabinets.

HOW TO ORDER

- Order C6DW__31 for 31½" high
- Refer to block 7130 for 18" through 30" wide

- Specify depth
- Pricing P-252

C6DW3631	**C6DW3633**
C6DW4231	**C6DW4233**
C6DW4831	**C6DW4833**

© Copyright StarMark Cabinetry **FEBRUARY 2022**

Block 7410 Tall Chest of Drawers with Wide Bottom Rail (WBR)

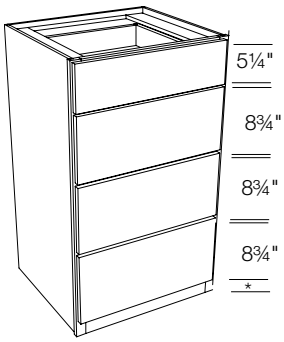

C4DW2440
C4DW2740
C4DW3040
C4DW3340
C4DW2442
C4DW2742
C4DW3042
C4DW3342

DESIGN CONSIDERATIONS

40½", 42" High - 21" Deep

- 18" and 24" deep are available at no additional charge – must specify when ordering
- 40½" has 3" WBR
- 42" has 4½" WBR
- For matching wood top, see block 7080

HOW TO ORDER

- Order C4DW__42 for 42" high
- Specify depth
- Pricing P-252

Block 7415 Tall Chest of Drawers with Wide Bottom Rail (WBR)

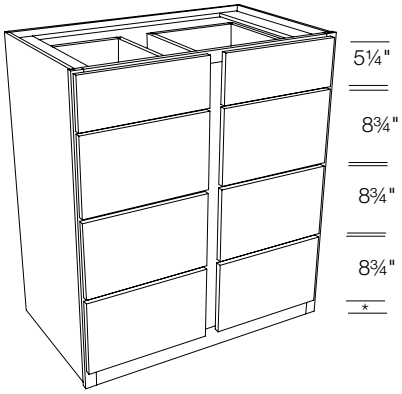

C8DW3640
C8DW4240
C8DW4840
C8DW3642
C8DW4242
C8DW4842

DESIGN CONSIDERATIONS

40½", 42" High - 21" Deep

- 18" and 24" deep are available at no additional charge – must specify when ordering
- 40½" has 3" WBR
- 42" has 4½" WBR
- For matching wood top, see block 7080

HOW TO ORDER

- Order C8DW__42 for 42" high
- Specify depth
- Pricing P-253

© Copyright StarMark Cabinetry FEBRUARY 2022

Block 7500 Tall with Wide Bottom Rail (WBR)

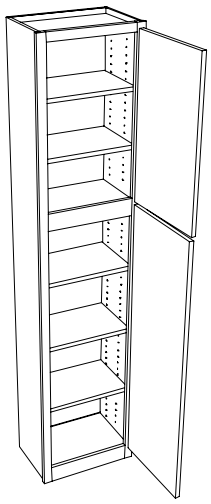

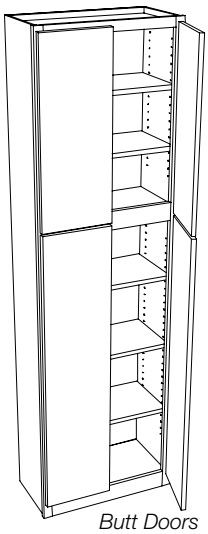

Butt Doors

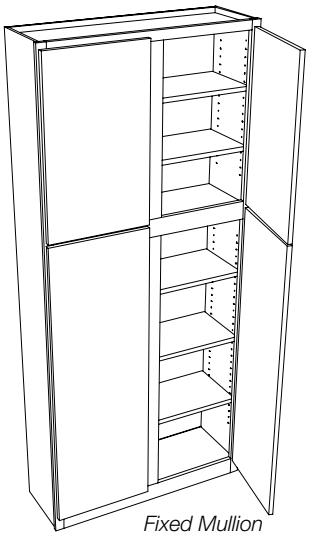

Fixed Mullion

Single Door	Butt Doors	Fixed Mullion
TWCW1881	**2TWCW2481**	
TWCW2481	**2TWCW2781**	
	2TWCW3081	
	2TWCW3381	
	2TWCW3681	**TWCW3681**
TWCW1882	**2TWCW2482**	
TWCW2482	**2TWCW2782**	
	2TWCW3082	
	2TWCW3382	
	2TWCW3682	**TWCW3682**

DESIGN CONSIDERATIONS

81", 82½" High - 12" Deep

- 81" has 3" WBR
- 82½" has 4½" WBR
- 5 adjustable shelves
- Mortise and tenon doors greater than 42" will have a center rail.

HOW TO ORDER

- Specify **L** or **R** hinging on Single Door cabinet
- Pricing P-253

© Copyright StarMark Cabinetry **FEBRUARY 2022**

Block 7510 Tall with Wide Bottom Rail (WBR)

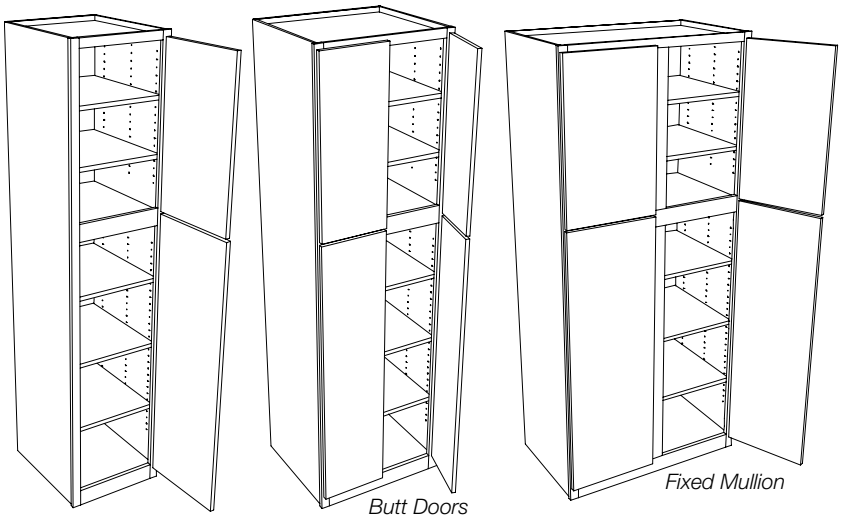

Single Door	Butt Doors	Fixed Mullion
TCW1881	**2TCW2481**	
TCW2481	**2TCW2781**	
	2TCW3081	
	2TCW3381	
	2TCW3681	**TCW3681**
TCW1882	**2TCW2482**	
TCW2482	**2TCW2782**	
	2TCW3082	
	2TCW3382	
	2TCW3682	**TCW3682**

DESIGN CONSIDERATIONS

81", 82½" High - 21" Deep

- 18" and 24" deep are available at no additional charge – must specify when ordering
- 81" has 3" WBR
- 82½" has 4½" WBR
- 5 adjustable shelves
- Mortise and tenon doors greater than 42" will have a center rail.

HOW TO ORDER

- Specify **L** or **R** hinging on Single Door cabinet
- Specify depth
- Pricing P-254

Block 7520 Tall with Drawers and Wide Bottom Rail (WBR)

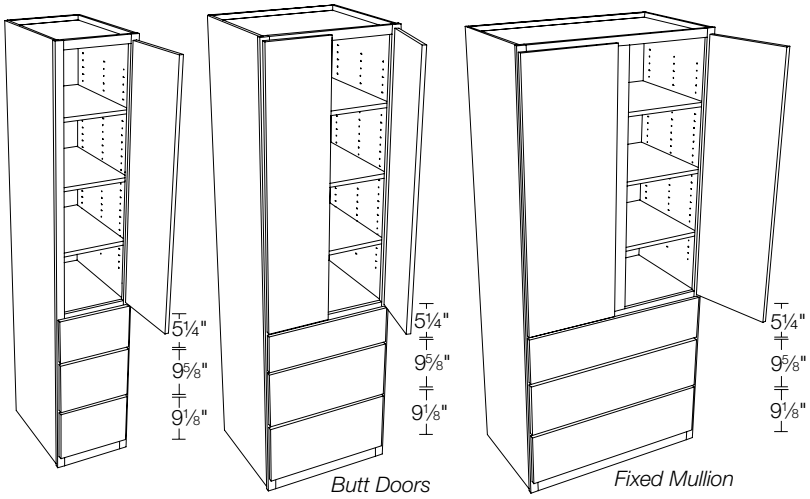

Single Door	Butt Doors	Fixed Mullion
TC3DW1581	**2TC3DW2481**	
TC3DW1881	**2TC3DW2781**	
TC3DW2481	**2TC3DW3081**	
	2TC3DW3381	
	2TC3DW3681	**TC3DW3681**
TC3DW1582	**2TC3DW2482**	
TC3DW1882	**2TC3DW2782**	
TC3DW2482	**2TC3DW3082**	
	2TC3DW3382	
	2TC3DW3682	**TC3DW3682**

DESIGN CONSIDERATIONS

81", 82½" High - 21" Deep

- 18" or 24" deep are available at no additional charge – must specify when ordering
- 81" has 3" WBR
- 82½" has 4½" WBR
- 3 adjustable shelves
- Mortise and tenon doors greater than 42" will have a center rail.

HOW TO ORDER

- Specify **L** or **R** hinging on Single Door cabinet
- Specify depth
- Pricing P-254-255

© Copyright StarMark Cabinetry **FEBRUARY 2022**

Block 7550 Tall Locker

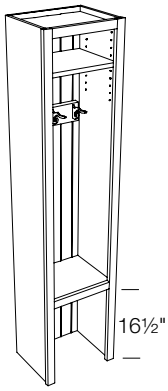

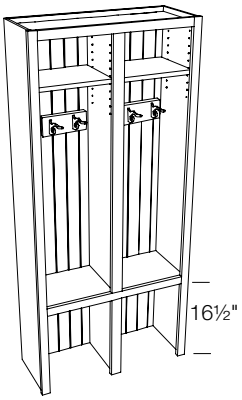

TLKR1566
TLKR1584

TLKR1866
TLKR1884

TLKR2166
TLKR2184

TLKR2466
TLKR2484

TLKR2766
TLKR2784
TLKR3066

TLKR3084

TLKR3366
TLKR3384

TLKR3666
TLKR3684

DESIGN CONSIDERATIONS

66", 84" High - 12" Deep

- Adjustable shelves. See chart for quantities.
- Beaded back
- Finished veneer interior
- Solid wood mounting bracket with black hooks. Brackets sent loose for field installation, see chart for quantities
- 30", 33", 36" wide have 2" center stile with a partition

HOW TO ORDER

- Pricing P-255

Width	66" high	84" high
15", 18", 21", 24", 27"	1 shelf 1 bracket 2 hooks	2 shelves 1 bracket 2 hooks
30", 33", 36"	2 shelves 2 brackets 4 hooks	4 shelves 2 brackets 4 hooks

INSTALLATION TIP

We recommend anchoring bottom of frame to maintain squareness of cabinet.

Block 7555 Tall Locker Stacked

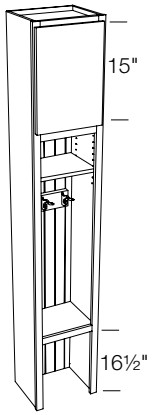

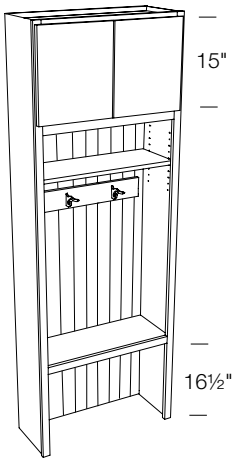

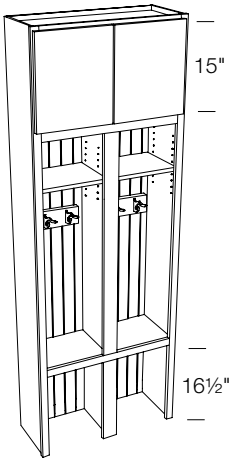

Single Door
TLSCK1584
TLSCK1884
TLSCK2184
TLSCK2484

Butt Doors
2TLSCK2484
2TLSCK2784

Butt Doors
2TLSCK3084
2TLSCK3384
2TLSCK3684

DESIGN CONSIDERATIONS

84" High - 12" Deep

- Adjustable shelves. See chart for quantities.
- Beaded back
- Finished veneer interior
- Two solid wood mounting brackets, each with 2 black hooks. Brackets sent loose for field installation, see chart for quantities
- 30", 33", 36" wide have 2" center stile with a partition
- No shelf in upper portion

HOW TO ORDER

- Specify **L** or **R** hinging on Single Door cabinet
- Pricing P-256

Width	
15", 18", 21", 24", 27"	1 shelf 1 bracket 2 hooks
30", 33", 36"	2 shelves 2 brackets 4 hooks

INSTALLATION TIP

We recommend anchoring bottom of frame to maintain squareness of cabinet.

© Copyright StarMark Cabinetry FEBRUARY 2022

Block 7600 Console Bookcase with Wide Bottom Rail (WBR)

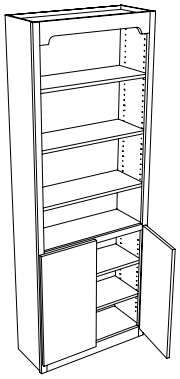

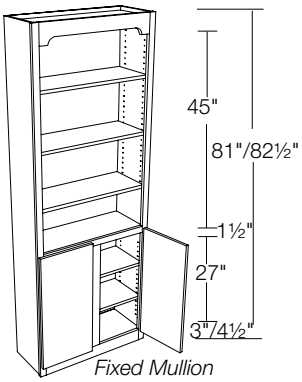

Butt Doors	Fixed Mullion
2CBC3081	**CBC3081**
2CBC3681	**CBC3681**
	CBC4281
2CBC3082	
2CBC3682	**CBC3082**
	CBC3682
	CBC4282

DESIGN CONSIDERATIONS

81", 82½" High - 12" Deep

- 81" has 3" WBR
- 82½" has 4½" WBR
- Top - 3 adjustable shelves
- Bottom - 2 adjustable shelves
- Arch valance is standard
- Ogee edge on frame opening
- Finished veneer interior

HOW TO ORDER

- Other valances are available. See block 9170 for Valance Top Rail options.
- Pricing P-256

Block 7610 Console Bookcase with Wide Bottom Rail (WBR)

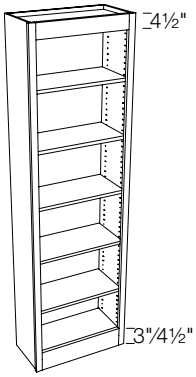

CCF2481	**CCF4281**	**CCFSQFT**
CCF3081	**CCF2482**	
CCF3681	**CCF3082**	
CCF4281	**CCF3682**	

DESIGN CONSIDERATIONS

81", 82½" High - 12" Deep

- 81" has 3" WBR
- 82½" has 4½" WBR
- 5 adjustable shelves
- Drilled end panels
- Ogee edge on frame opening
- Finished veneer interior
- For optional shelf trim. See block 10070.
- Straight valance is standard

HOW TO ORDER

- Additional sizes are available; use square foot pricing
- Other valances are available. See block 9170 for Valance Top Rail options.
- Ogee edge on frame may be modified when certain valances are specified for top rail. See HelpZone for information.
- When ordering a non-standard size, please specify height of bottom rail.
- Pricing P-257

NOTES/CAUTION

- Beaded inset only available with straight valance. Other valances are available with flush inset. See How to Order for additional information.

© Copyright StarMark Cabinetry FEBRUARY 2022

Block 7900 Console Bookcase Deep with Wide Bottom Rail (WBR)

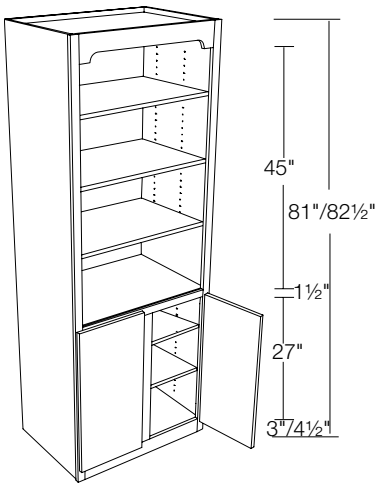

CBCB3081 **CBCB3082**
CBCB3681 **CBCB3682**
CBCB4281 **CBCB4282**

DESIGN CONSIDERATIONS

81", 82½" High - 21" Deep

- 18" and 24" deep are available at no additional charge - must specify when ordering
- 81" has 3" WBR
- 82½" has 4½" WBR
- Upper portion has 3 adjustable shelves
- Lower portion has 2 adjustable shelves
- Arch valance is standard
- Drilled end panel
- Ogee edge on frame opening
- Finished veneer interior

HOW TO ORDER

- Other valances are available. See block 9170 for Valance Top Rail options.
- Ogee edge on frame may be modified when certain Valances are specified. See HelpZone for information.
- Specify depth
- Pricing P-257

© Copyright StarMark Cabinetry FEBRUARY 2022

Block 7920 Mantel

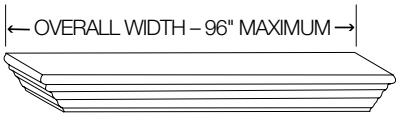

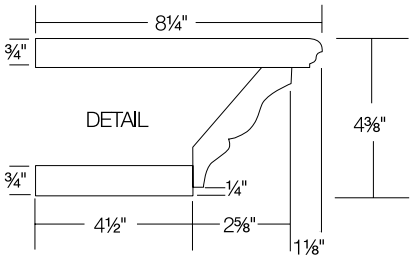

MTL35-48
MTL49-60
MTL61-72
MTL73-84
MTL85-96

DESIGN CONSIDERATIONS
- Crown moulding used in this mantel is WCM.

HOW TO ORDER
- Specify longest point of mantel
- Pricing P-257

Block 7923 Mantel with SSTK and PSH Top and Bottom

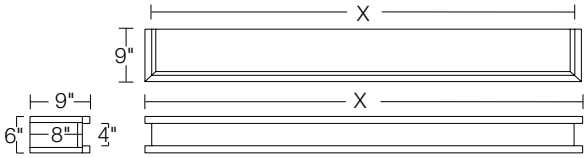

MTPS35-48
MTPS49-60
MTPS61-72
MTPS73-84
MTPS85-96

DESIGN CONSIDERATIONS
6" High - 9" Deep

HOW TO ORDER
- Specify longest point of mantel
- Specify **AA, BB, CC** or **DD** edge detail for PSH
- Pricing P-257

Block 7924 Mantel with Stacked SSTK

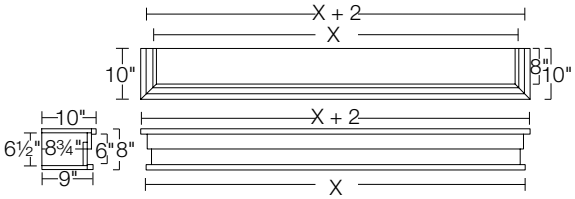

MTSS35-48
MTSS49-60
MTSS61-72
MTSS73-84
MTSS85-96

Solid Stock Treatments	
Aero	RSSE-AERO
Decorator	RSSE-DCE
F	RSSE-F
H	RSSE-H
L	RSSE-L
M	RSSE-M
Z2	RSSE-Z2

DESIGN CONSIDERATIONS
8" High
- 10" deep at the top, 9" deep at the bottom

HOW TO ORDER
- Specify **AA, BB, CC** or **DD** edge detail for top and bottom PSH
- Specify solid stock treatment overlapping SSTK. See list at left
- Specify width of mantel.
  - –Recommend minimum of 1½" greater than surround width
  - –Overall width is 2" greater than specified width

- Pricing P-258

© Copyright StarMark Cabinetry FEBRUARY 2022

Block 7925 Mantel with SSTK and Crown Moulding

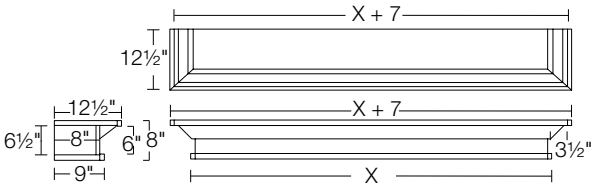

MTCRN35-48
MTCRN49-60
MTCRN61-72
MTCRN73-84
MTCRN85-96

Crown Moulding	
Block	Nomenclature
12280	ACCM
12270	CCM
12400	LCCM
12240	LCM
12260	RCM
12250	WCM

DESIGN CONSIDERATIONS

8" High

- 12½" deep at the top, 9" deep at the bottom

HOW TO ORDER

- Specify **AA, BB, CC** or **DD** edge detail for top and bottom PSH
- Specify Crown Moulding from list at left
- Specify width of mantel.
  - –Recommend minimum of 1½" greater than surround width
  - –Overall width is 7" greater than specified width
- Pricing P-258

Block 7953 Fireplace Surround with ADIP Fascia - Square Valance

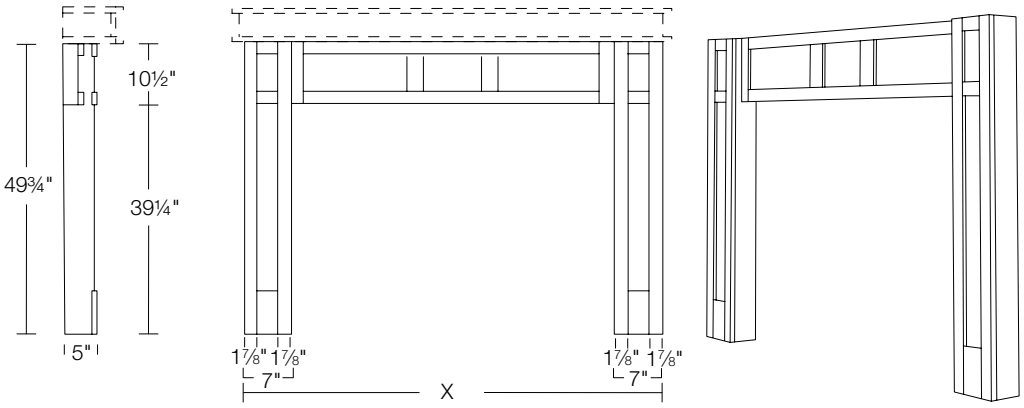

FPAPS40-87

DESIGN CONSIDERATIONS

- Built as a coordinating ADIP, 2 columns and Straight valance.
- Each column is 7" wide X 5" deep with 1⅞" stiles.
- The space between the columns is 14" less than the width of the surround.
- Height and width modifications are available. The minimum column width is 7"
- The width is adjusted in the two outer sections of the valance.
- The height is adjusted in the center panel section of the column.
- The center valance is 10½" high X 3" deep.
- Shipped in three pieces

HOW TO ORDER

- Specify width
- Mantel sold separately. See blocks 7920, 7923, 7924 and 7925.
- Pricing P-258

Block 7954 Fireplace Surround with ADIP Fascia - Arched Valance

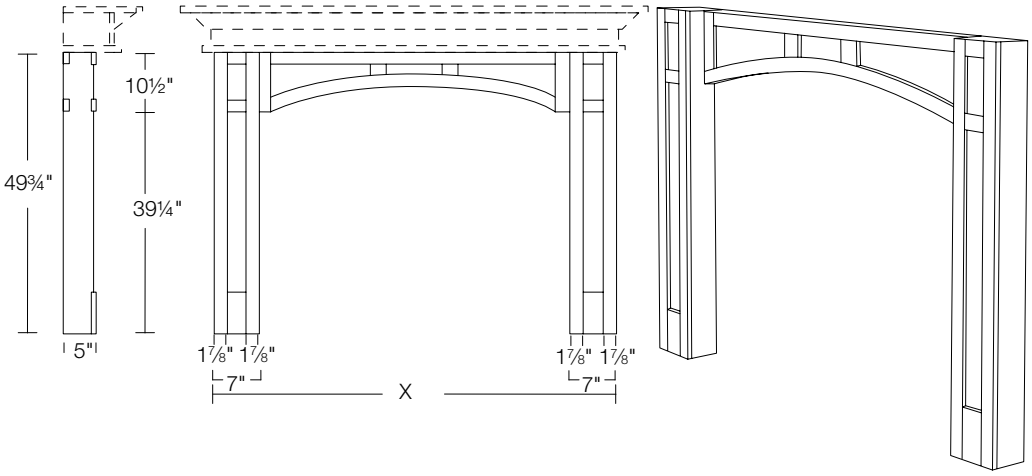

FPAPA40-87

DESIGN CONSIDERATIONS

- Built as coordinating ADIP, 2 columns and Arched valance.
- Each column is 7" wide X 5" deep with 1⅞" stiles.
- Height and width modifications are available. The minimum column width is 7"
- The width is adjusted in the two outer sections of the valance.
- The height is adjusted in the center panel section of the column.
- The center valance is 10½" high (6" high at center) X ¾" deep.
- The space between the columns is 14" less than the width of the surround.
- Shipped in three pieces

HOW TO ORDER

- Specify width
- Mantel sold separately. See blocks 7920, 7923, 7924 and 7925.
- Pricing P-258

© Copyright StarMark Cabinetry FEBRUARY 2022

Block 7958 Fireplace Surround with Post Options

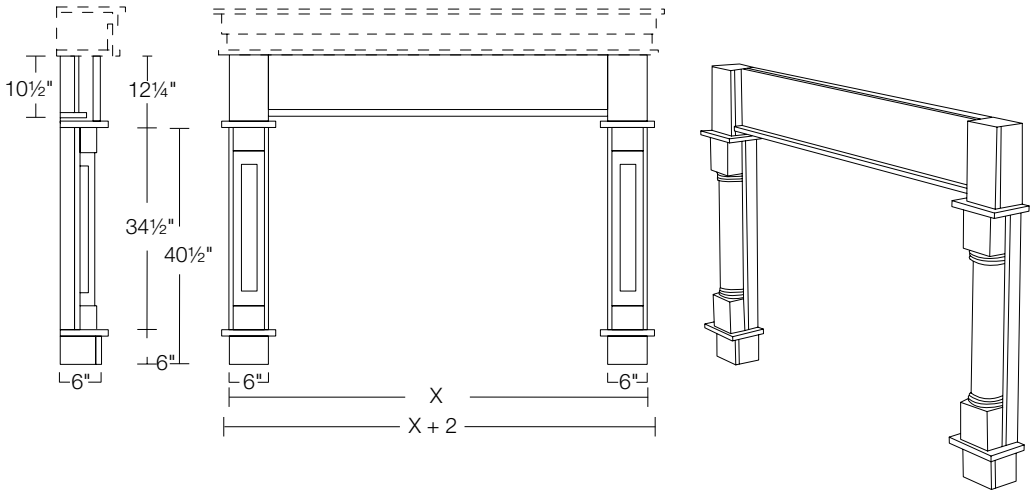

Shown with GP01534SGR

FPPST40-87

DESIGN CONSIDERATIONS

- Each column is 6" wide X 6" deep.
- Columns built with PSH above and below SPLIT post.
- PSH shelves extend 1" beyond front and sides of post.
- Available posts are listed at left.
- SPLIT posts are 5½" wide X 34½" high.
- Column behind post is 3" deep.
- Height and width modifications are available. The minimum column width is 6".
- The height is adjusted in the top section of the column.
- The width is adjusted in the valance.
- The center valance is 10½" high X 3" deep at the vertical panel and 4" deep overall.
- Recommended for 52" or taller surrounds.
- The space between the columns is 12" less than the width of the surround.

HOW TO ORDER

- Specify width
- Specify AA, BB, CC or DD edge detail for top and bottom PSH.
- Specify post
- Mantel sold separately. See blocks 7920, 7923, 7924 and 7925.
- Pricing P-258

Available Posts			
GP60534	GP70534	GP80534	GP01534SPL
GP61534	GP71534	GP81534	GP01534SGR
GP62534	GP72534	GP82534	GP01534SCF
GP63534	GP73534	GP83534	GP01534SFL
GP64534	GP74534	GP84534	GP02534SQA
GP65534	GP75534	GP85534	Maple will be substituted for Hickory
GP66534	GP76534	GP86534	
GP67534	GP77534	GP87534	
GP68534	GP78534	GP88534	
GP69534	GP79534	GP99534	

© Copyright StarMark Cabinetry FEBRUARY 2022

Index

Description	Nomenclature	Page
Combination Sink and Drawer Base	VSD	C-287-288
Combination Two Drawer Stack Wall Hung	V4CWH	C-308
Combination Two Sinks with Drawer Base	VSDS	C-288
Combination with Two Drawer Bases	VCD	C-289
Console Sink with Side Drawers	VCC	C-289
Johnny Wall	VJW	C-302
Linen with Drawers	VLD	C-310
Linen with Drawers	TVLD	C-311
Linen with Hamper	VLH	C-309
Linen with Hamper	TVLH	C-309
Six Drawer Front Combination Wall Hung	V6DWH	C-308
Spa Vanity Combination Two Drawer Stack	VCDG	C-317
Spa Vanity Combination Two Drawer Stack with Plinth Shelf	VCDGP	C-319
Spa Vanity Double Sink	VDSG	C-316
Spa Vanity Double Sink with Plinth Shelf	VDSGP	C-319
Spa Vanity Sink and Drawer Combination	VSDG	C-315
Spa Vanity Sink with Eyebrow Valance	VSGEY	C-314
Spa Vanity Sink with Plinth Shelf	VSGP	C-318
Spa Vanity Six Drawer Front Combination with Plinth Shelf	VG6DP	C-320
Tailored Mirror	MIRROR	C-321
Tailored Mirror with Mouldings	VMIR	C-321
Tailored Tall Vanity Combination Drawer and Sink Base with Wide Stiles	TVSDW	C-313
Tailored Tall Vanity Full Height Sink Base with Wide Stiles	TVSWF	C-313
Tailored Tall Vanity Sink Base with Wide Stiles	TVSW	C-312
Tall Combination Sink and Drawer Base	TVSD	C-293
Tall Combination Sink and Three Drawer Base	TVS3D	C-294
Tall Combination Sink and Two Drawer Base	TVS2D	C-294
Tall Combination Two Sinks with Drawer Base	TVSDS	C-295
Tall Combination Two Sinks with Three Drawer Base	TV3DS	C-295
Tall Combination with Three Drawer Bases	TVC3D	C-296
Tall Combination with Two Drawer Bases	TVCD	C-295
Tall Console Sink with Side Drawers	TVCC	C-296
Tall Linen	VL	C-309
Tall Linen	TVL	C-310
Tall Vanity Base	TVB	C-292
Tall Vanity Sink Base with Full Height Door	TVF	C-291
Tall Vanity Drawer Base	TVDB	C-292
Tall Vanity Grooming Organizer	TVGO	C-297
Tall Vanity Organizer	TVO	C-298
Tall Vanity Reverse Sink Base	TVR	C-291
Tall Vanity Sink Base	TVS	C-291
Tall Vanity Three Drawer Base	TV3DBA	C-292
Toilet Topper	VTT	C-302
Trimmable Vanity Desk Drawer	VDD	C-287
Vanity Base	VB	C-286
Vanity Base with Full Height Door	VF	C-286
Vanity Combination Sink and Drawer Base Wall Hung	VSDWH	C-307
Vanity Combination with Two Drawer Bases Wall Hung	VCDWH	C-307
Vanity Drawer Base	VDB	C-287
Vanity Full Height Wall Hung Short	VFWH	C-305
Vanity Full Height Wall Hung Tall	VFWH_T	C-305
Vanity Grooming Organizer	VGO	C-290
Vanity Hamper	VH	C-290
Vanity Organizer	VO	C-290
Vanity Platform	VPF	C-299-301
Vanity Reverse Sink Base	VR	C-285
Vanity Sink Base	VS	C-285
Vanity Three Drawer Wall Hung Tall	V3DWH	C-306
Vanity Tri Mirror	VTM	C-304
Vanity Two Drawer Wall Hung Short	V2DWH	C-306
Vanity Two Drawer Wall Hung Tall	V2DWH_T	C-306
Vanity Wall	VW	C-303
Vanity Wall Mirror	VMC	C-303
Vanity Wall with Shelf	VWS	C-303
Vanity Wall with Two Drawers	VW2D	C-302

© Copyright StarMark Cabinetry FEBRUARY 2022

Index

Description	Nomenclature	Page	Description	Nomenclature	Page

© Copyright StarMark Cabinetry FEBRUARY 2022

✪ Bathrooms are often small spaces. To prevent a vanity drawer from opening into door trim in smaller installations, use a filler, extended stile, or wide stile. See **HelpZone** for diagram.

Our sink vanities have a full back. Many other cabinet manufacturers eliminate or shorten the back panel in their sink vanities.

Standards for Single Door Vanity Cabinets

○ Heights are 31½", 34½", and 84"

○ Arched door styles are available in vanity cabinets 31½" or higher.

○ Depths are 18" and 21" unless noted

○ Vertical stiles on the cabinet frame are 1½" wide

○ Horizontal rails on the cabinet frame are 1½" high unless noted

○ Toe kick height is 4"

○ Toe kick recess is 2⅝"

○ To compute door/drawer opening width for a **Single Door** standard vanity cabinet, subtract 3" from cabinet width.

○ Door opening height is 18" or 21"

○ Drawer opening height is 5¼"

Standards for Double Door Vanity Cabinets

○ Heights are 31½", 34½", and 84"

○ Arched door styles are available in vanity cabinets 31½" or higher

○ Depths are 18" and 21" unless noted

○ Vertical stiles on the cabinet frame are 1½" wide

○ Vertical mullions are 3" wide

○ Horizontal rails on the cabinet frame are 1½" high unless noted

○ Toe kick height is 4"

○ Toe kick recess is 2⅝"

○ A prefix of "2" denotes a cabinet built with butt doors. The cabinet is considered "full access" because there is no center mullion.

○ Butt doors are not available in cabinets that are wider than 36".

○ Cabinets wider than 36" will have a fixed center mullion. A fixed center mullion is necessary for stability.

○ Butt door cabinets have full width drawers.

○ To compute door/drawer opening width for a **Double Door** standard vanity cabinet, subtract 6" from cabinet width and divide by 2.

○ To compute door/drawer opening width for a **Butt Door** standard vanity cabinet, subtract 3" from cabinet width.

○ Door opening height is 18" or 21"

○ Drawer opening height is 5¼"

© Copyright StarMark Cabinetry **FEBRUARY 2022**

Vanity Cabinet Frame Openings Alignment

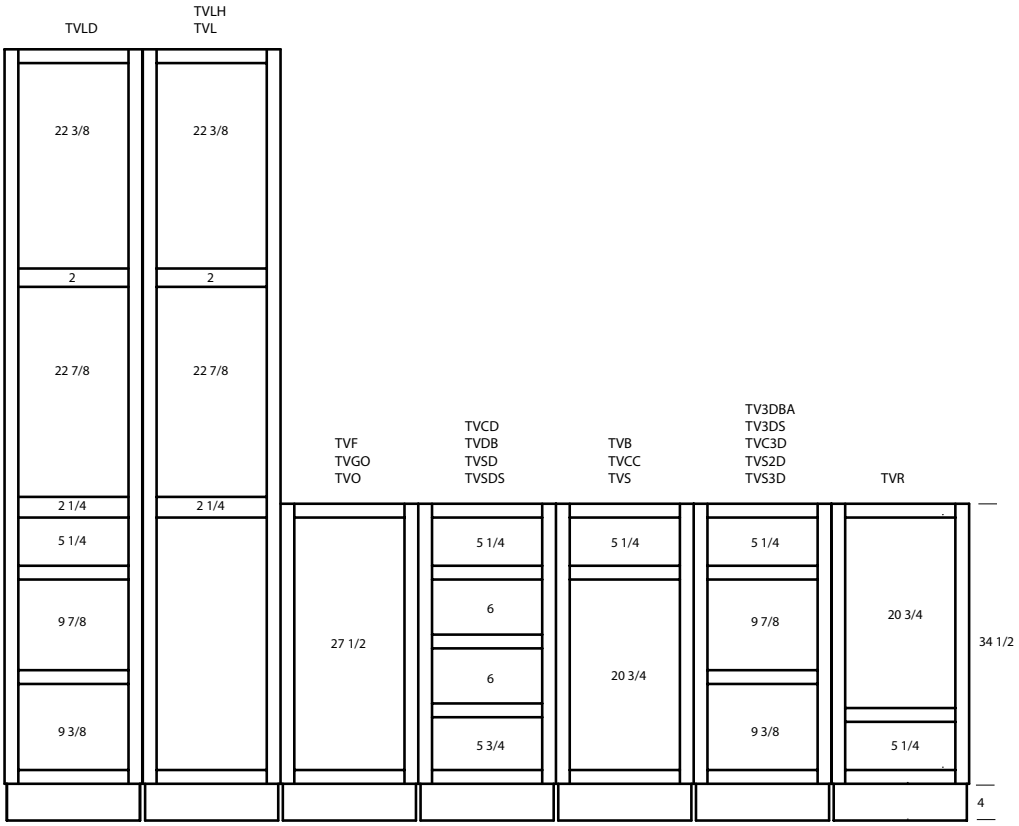

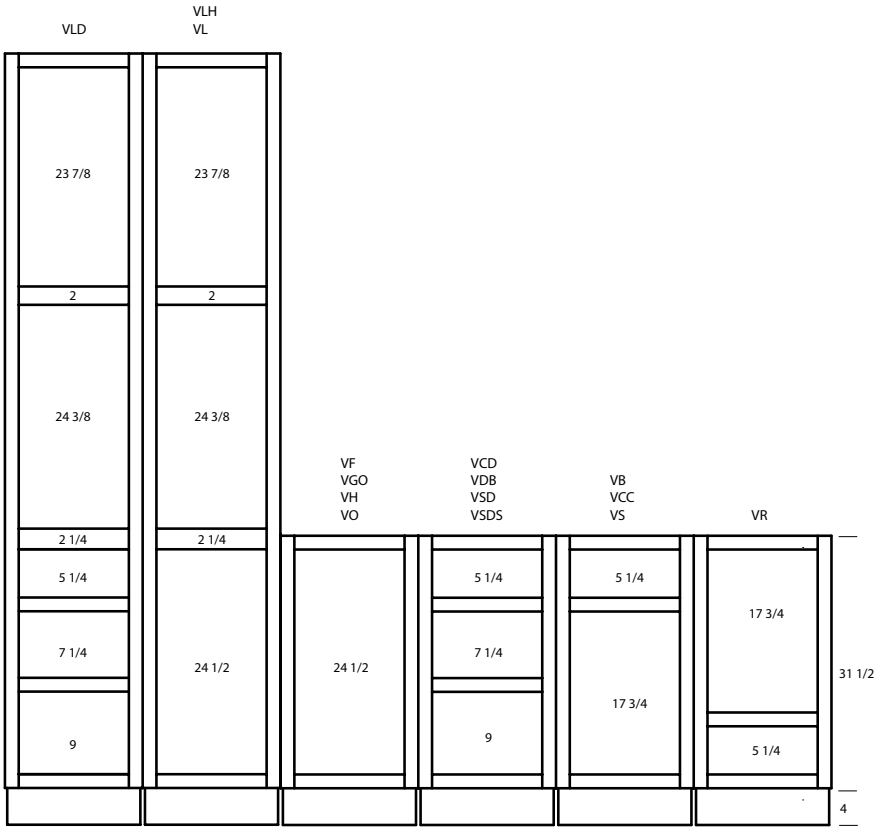

© Copyright StarMark Cabinetry **FEBRUARY 2022**

Face Frame Dimensions for Vanity Cabinets

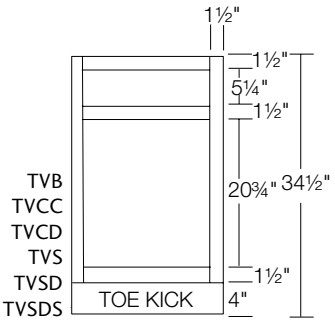

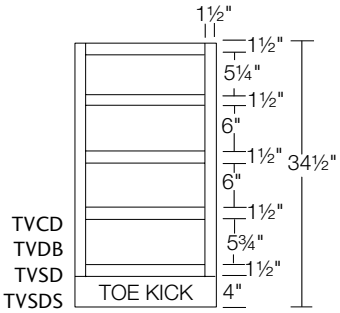

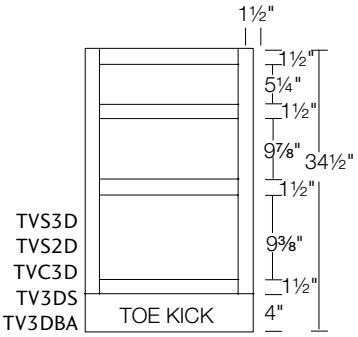

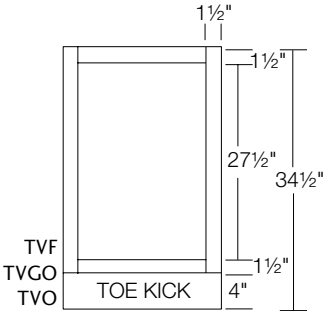

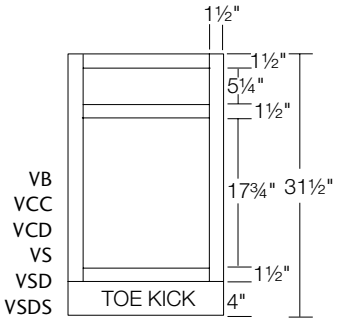

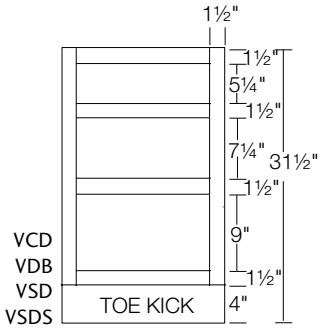

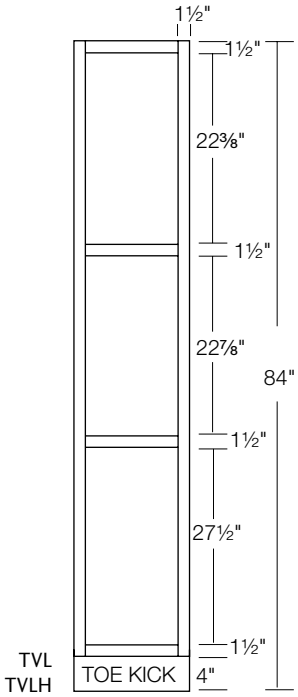

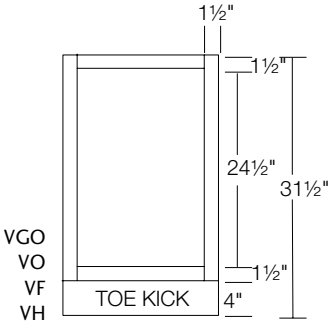

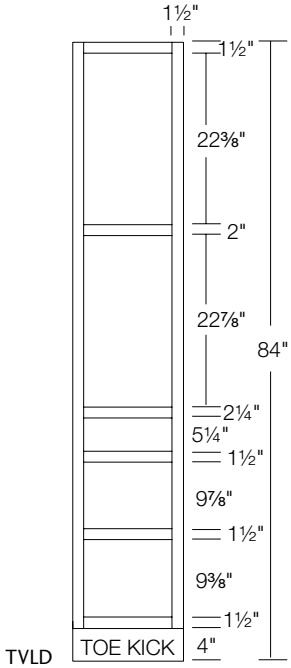

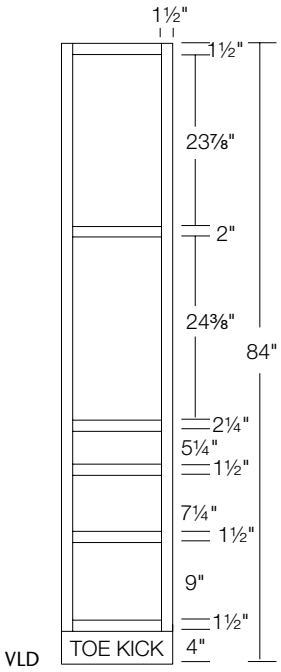

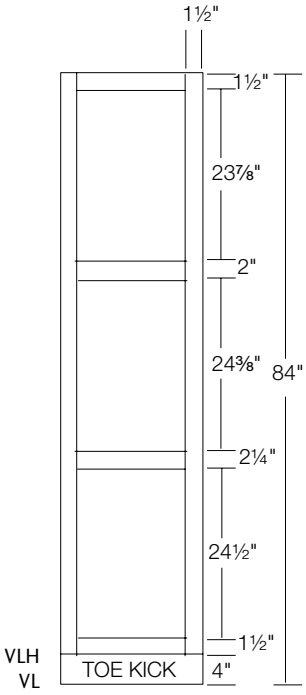

© Copyright StarMark Cabinetry FEBRUARY 2022

Vanity Cabinet Door and Drawer Alignment

Modern Overlay

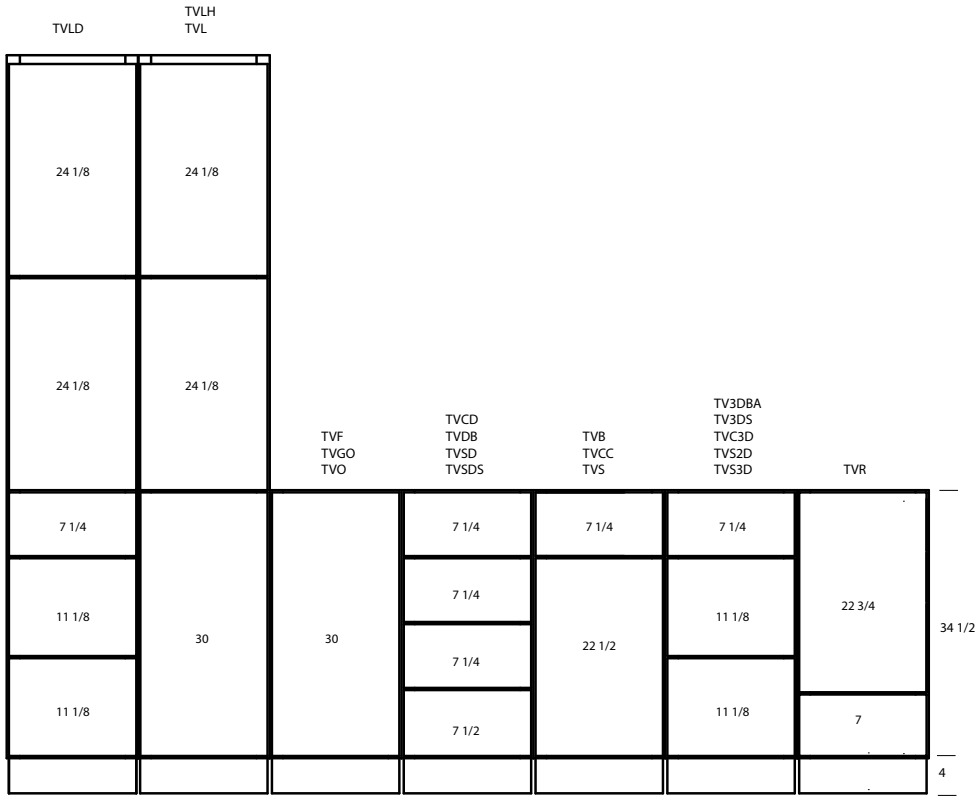

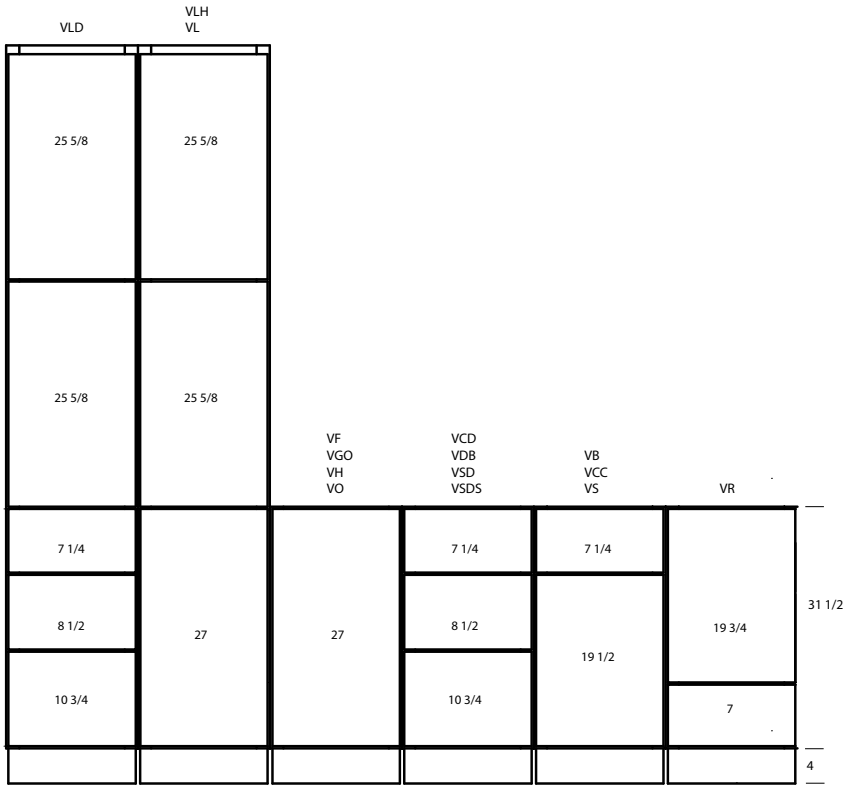

© Copyright StarMark Cabinetry FEBRUARY 2022

Vanity Cabinet Door and Drawer Alignment

Traditional Overlay

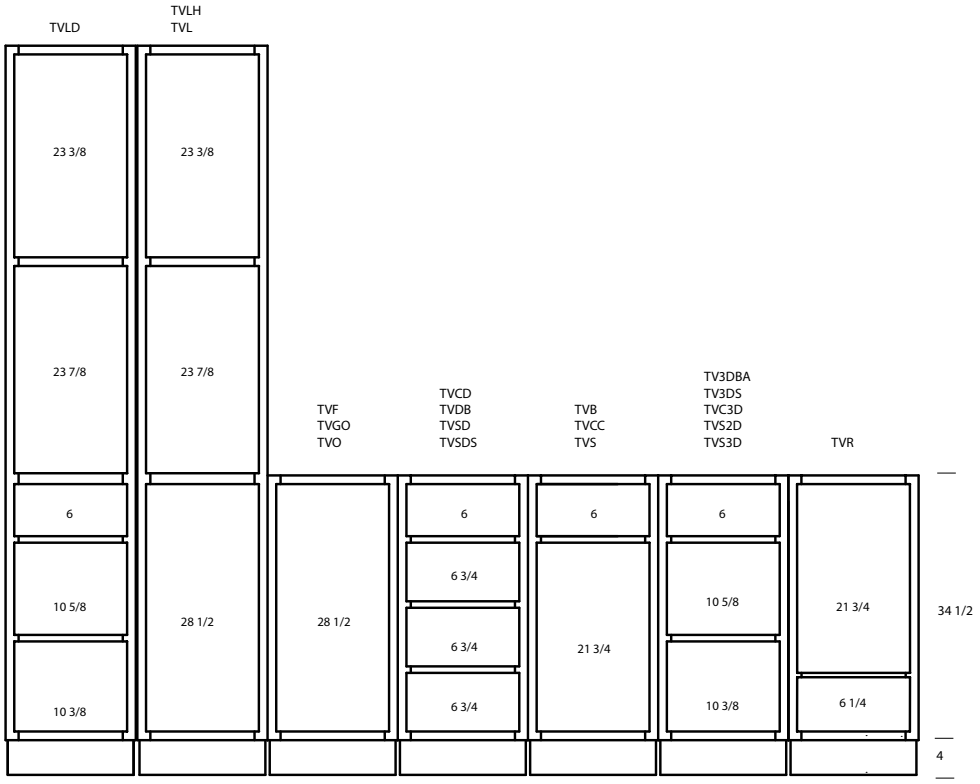

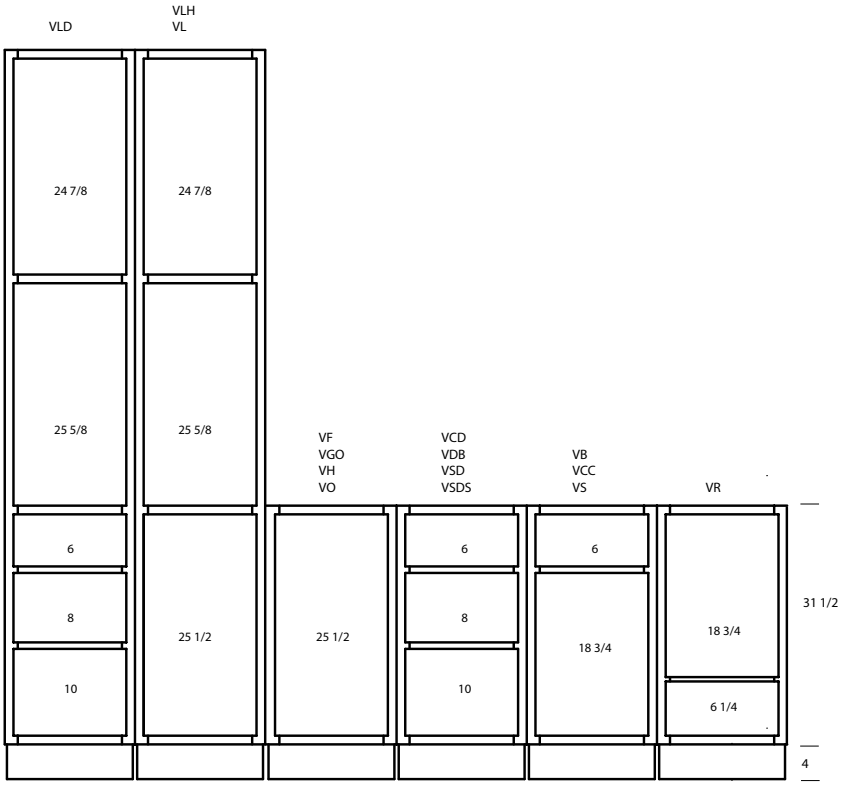

© Copyright StarMark Cabinetry FEBRUARY 2022

Spa Vanity and Wall Hung Vanity Cabinet Frame Openings Alignment

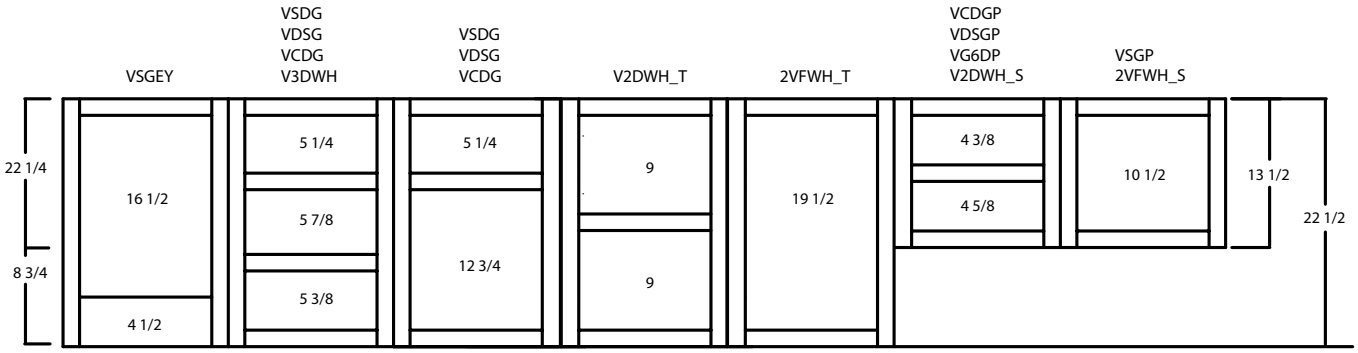

Spa Vanity and Wall Hung Vanity Cabinet Door and Drawer Alignment Modern Overlay

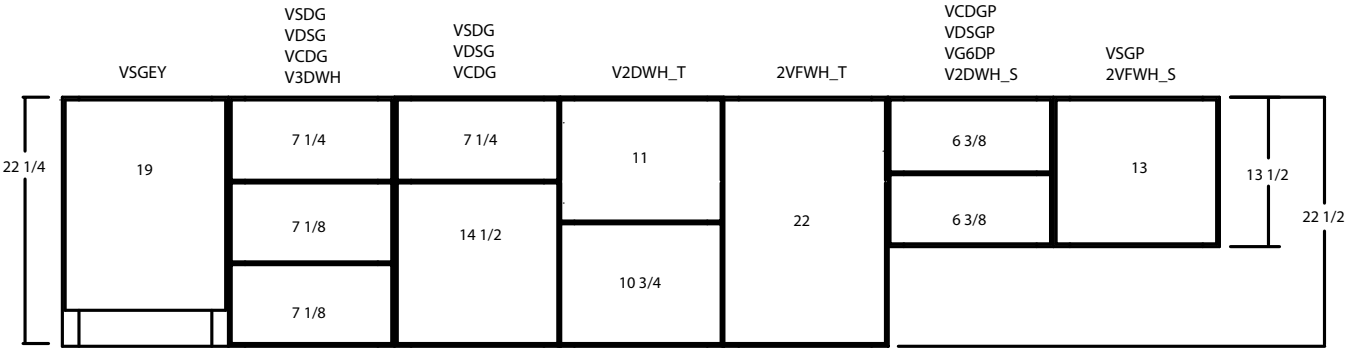

Spa Vanity and Wall Hung Vanity Cabinet Door and Drawer Alignment Traditional Overlay

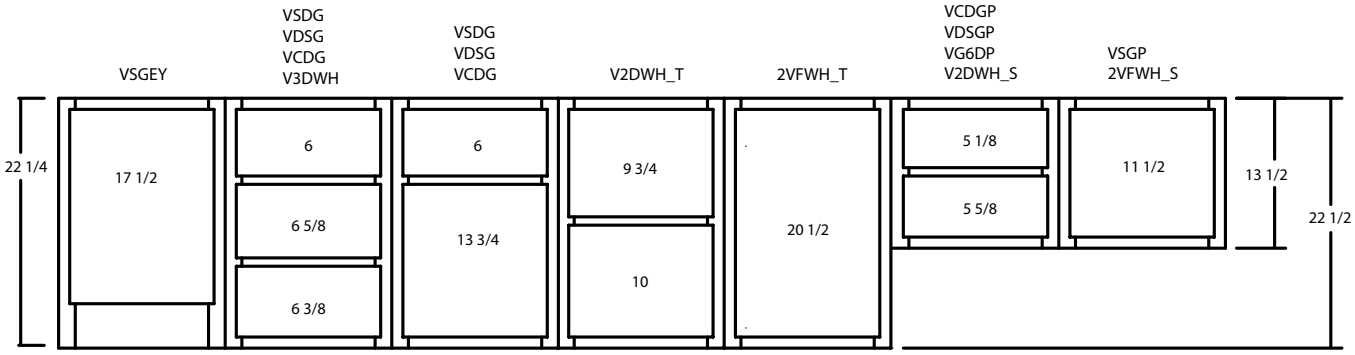

© Copyright StarMark Cabinetry FEBRUARY 2022

Block 8000 Vanity Sink Base

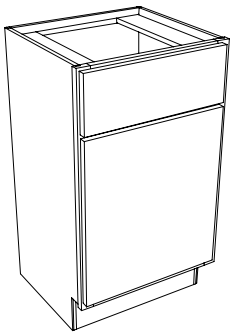

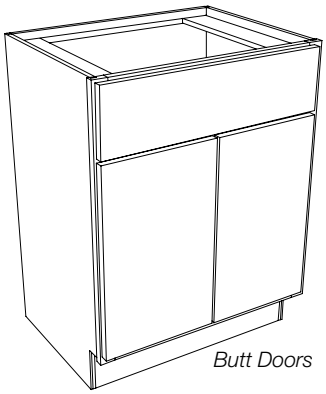

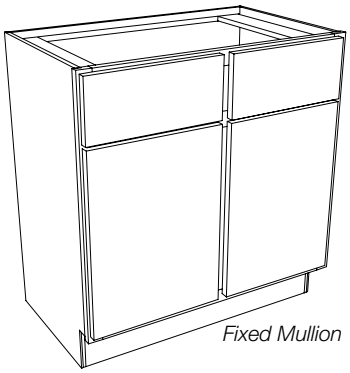

DESIGN CONSIDERATIONS

31½" High - 16", 18", 21" Deep

- No shelf

HOW TO ORDER

- Specify **L** or **R** hinging on Single Door cabinet
- Pricing P-261

Single Door	Butt Doors	Butt Doors	Fixed Mullion
VS1816	**2VS2418**	**2VS2421**	**VS3018**
	2VS2718	**2VS2721**	**VS3318**
VS1818	**2VS3018**	**2VS3021**	**VS3618**
VS2118	**2VS3318**	**2VS3321**	
	2VS3618	**2VS3621**	**VS3021**
VS1821	**2VS3918**	**2VS3921**	**VS3321**
VS2121	**2VS4218**	**2VS4221**	**VS3621**

Block 8005 Vanity Reverse Sink Base

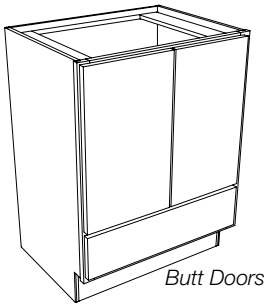

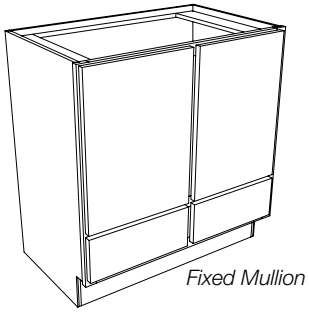

DESIGN CONSIDERATIONS

31½" High - 18", 21" Deep

- No shelf

HOW TO ORDER

- Pricing P-261

INSTALLATION TIP

Not recommended for floor mounted water lines. They may interfere with drawer operation.

Butt Doors	Fixed Mullion
2VR2418	**VR3018**
2VR2718	**VR3318**
2VR3018	**VR3618**
2VR3318	
2VR3618	**VR3021**
2VR3918	**VR3321**
2VR4218	**VR3621**
2VR2421	
2VR2721	
2VR3021	
2VR3321	
2VR3621	
2VR3921	
2VR4221	

© Copyright StarMark Cabinetry **FEBRUARY 2022**

Block 8010 Vanity Base with Full Height Door

I

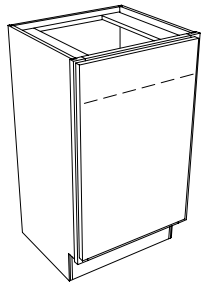

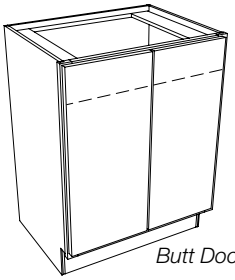

Butt Doors

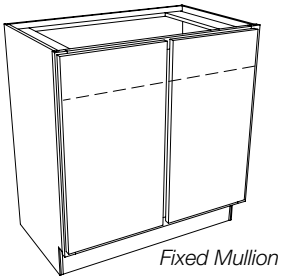

Fixed Mullion

Single Door	Butt Doors	Butt Doors	Fixed Mullion
VF1816	**2VF2418**	**2VF2421**	**VF3018**
	2VF2718	**2VF2721**	**VF3318**
VF1818	**2VF3018**	**2VF3021**	**VF3618**
VF2118	**2VF3318**	**2VF3321**	
	2VF3618	**2VF3621**	**VF3021**
VF1821	**2VF3918**	**2VF3921**	**VF3321**
VF2121	**2VF4218**	**2VF4221**	**VF3621**

DESIGN CONSIDERATIONS

31½" High - 16", 18", 21" Deep

- No shelf
- Apron behind doors conceals sink bowl

HOW TO ORDER

- Specify **L** or **R** hinging on Single Door cabinet
- Pricing P-262

Block 8015 Vanity Base

I

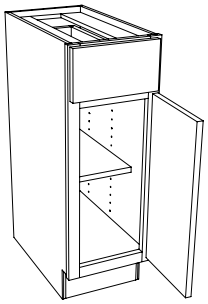

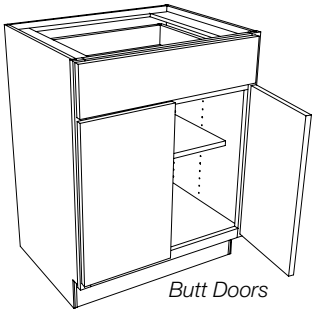

Butt Doors

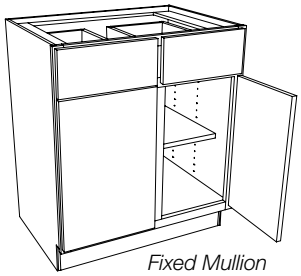

Fixed Mullion

Single Door	Butt Doors	Butt Doors	Fixed Mullion
VB1218	**2VB2718**	**2VB2721**	**VB3018**
VB1518	**2VB3018**	**2VB3021**	**VB3318**
VB1818	**2VB3318**	**2VB3321**	**VB3618**
VB2118	**2VB3618**	**2VB3621**	
VB2418	**2VB3918**	**2VB3921**	**VB3021**
	2VB4218	**2VB4221**	**VB3321**
VB1221			**VB3621**
VB1521			
VB1821			
VB2121			
VB2421			

DESIGN CONSIDERATIONS

31½" High - 18", 21" Deep

- 1 adjustable ⅔ depth shelf

HOW TO ORDER

- Specify **L** or **R** hinging on Single Door cabinet
- Pricing P-262-263

© Copyright StarMark Cabinetry **FEBRUARY 2022**

Block 8020 Vanity Drawer Base

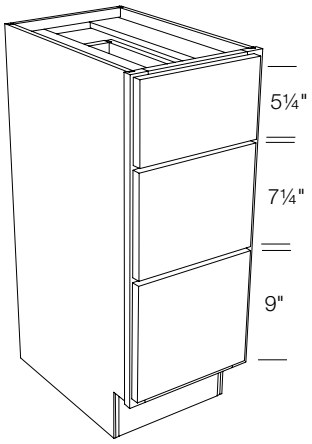

DESIGN CONSIDERATIONS
31½" High - 18", 21" Deep

HOW TO ORDER
- Pricing P-263

VDB1218	**VDB2718**	**VDB1221**	**VDB2721**
VDB1518	**VDB3018**	**VDB1521**	**VDB3021**
VDB1818	**VDB3318**	**VDB1821**	**VDB3321**
VDB2118	**VDB3618**	**VDB2121**	**VDB3621**
VDB2418	**VDB3918**	**VDB2421**	**VDB3921**
	VDB4218		**VDB4221**

Block 8025 Trimmable Vanity Desk Drawer

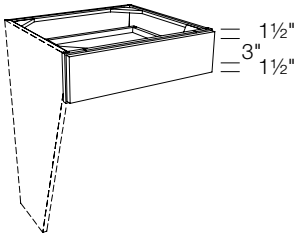

VDD2721T
VDD3021T

DESIGN CONSIDERATIONS
6" High - 21" Deep
- Trimmable 3" each side
- 3" drawer opening

HOW TO ORDER
- Order a tapered end panel if this drawer will be on the end of a run. See block 11850.
- Pricing P-263

COMBINATION SINK AND DRAWER BASE

For blocks
8030
8035
8040

DESIGN CONSIDERATIONS
31½" High - 18", 21" Deep

HOW TO ORDER
- Changing opening sizes by 3" increments is a no charge option

Block 8030 Combination Sink and Drawer Base

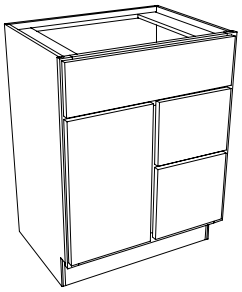

VSD2418	**VSD2421**
VSD2718	**VSD2721**
VSD3018	**VSD3021**

DESIGN CONSIDERATIONS
31½" High - 18", 21" Deep
- Not available in Hampton with 5-pc. header
- When specifying a VSD24 in a raised panel door with 3⅜" stiles, the door is built with 2¼" stiles. See Cabinetry Specifications for details.

HOW TO ORDER
- Specify **L** or **R** hinging
- Drawer stack is on the right unless your order specifies left
- Pricing P-264

Opening width	Door	Drawer
VSD24__	9"	9"
VSD27__	12"	9"
VSD30__	15"	9"

INSTALLATION TIP
To find center of sink for countertop cutout, divide cabinet width by two.

© Copyright StarMark Cabinetry **FEBRUARY 2022**

COMBINATION SINK AND DRAWER BASE

For blocks
8030
8035
8040

DESIGN CONSIDERATIONS
31½" High - 18", 21" Deep

HOW TO ORDER
- Changing opening sizes by 3" increments is a no charge option

Block 8030 Combination Sink and Drawer Base

continued

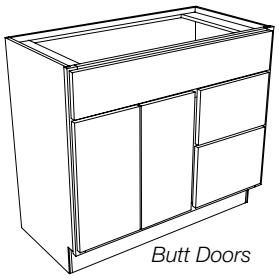

Butt Doors	Butt Doors
2VSD3318	**2VSD3321**
2VSD3618	**2VSD3621**

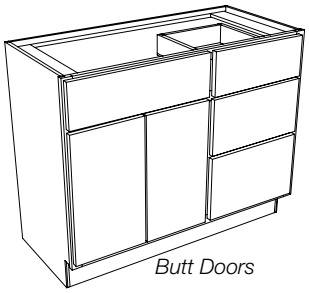

Butt Doors	Butt Doors
2VSD3918	**2VSD3921**
2VSD4218	**2VSD4221**
2VSD4518	**2VSD4521**
2VSD4818	**2VSD4821**

DESIGN CONSIDERATIONS
31½" High - 18", 21" Deep
- Not available in Hampton with 5-pc. header
- When specifying a 2VSD33, 2VSD36 or 2VSD39 in a raised panel door with 3⅜" stiles, the door is built with 2¼" stiles. See Cabinetry Specifications for details.

HOW TO ORDER
- Drawer stack is on the right unless your order specifies left
- Pricing P-264

Opening width	Door	Drawer
2VSD33__	18"	9"
2VSD36__	18"	12"
2VSD39__	18"	15"
2VSD42__	21"	15"
2VSD45__	24"	15"
2VSD48__	27"	15"

INSTALLATION TIP
- 33" and 36" wide: to find center of sink for countertop cutout, divide cabinet width by two
- 39, 42", 45", and 48" wide: to find center of sink for countertop cutout, add frame stile width to half the width of door opening.

Block 8035 Combination Two Sinks with Drawer Base

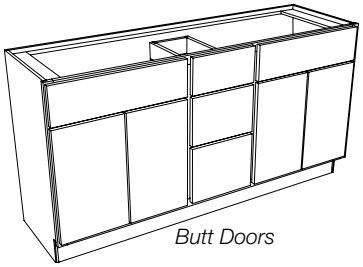

Butt Doors	Butt Doors
2VSDS6018	**2VSDS6021**
2VSDS6618	**2VSDS6621**
2VSDS7218	**2VSDS7221**

DESIGN CONSIDERATIONS
31½" High - 18", 21" Deep

HOW TO ORDER
- Pricing P-264

Opening width	Dr	Dwr	Dr
2VSDS60__	21"	9"	21"
2VSDS66__	21"	15"	21"
2VSDS72__	24"	15"	24"

INSTALLATION TIP
To find center of sink for countertop cutout, add frame stile width to half the width of door opening.

© Copyright StarMark Cabinetry FEBRUARY 2022

Block 8040 Combination with Two Drawer Bases

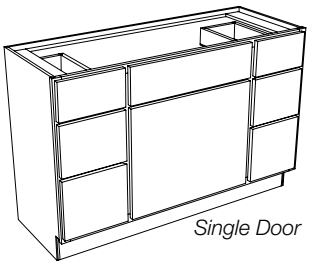

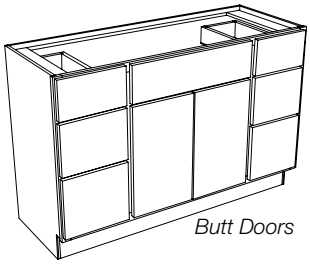

Single Door	Butt Doors
VCD4218	**2VCD4818**
VCD4518	**2VCD5118**
	2VCD5418
	2VCD5718
	2VCD6018
VCD4221	**2VCD4821**
VCD4521	**2VCD5121**
	2VCD5421
	2VCD5721
	2VCD6021

DESIGN CONSIDERATIONS

31½" High - 18", 21" Deep

HOW TO ORDER

- Specify **L** or **R** hinging on Single Door cabinet
- Pricing P-265

Opening width	Dwr	Dr	Dwr
VCD42__	9"	15"	9"
VCD45__	9"	18"	9"
Butt doors			
2VCD48__	9"	21"	9"
2VCD51__	9"	24"	9"
2VCD54__	12"	21"	12"
2VCD57__	12"	24"	12"
2VCD60__	12"	27"	12"

INSTALLATION TIP

To find center of sink for countertop cutout, divide cabinet width by two.

Block 8045 Console Sink with Side Drawers

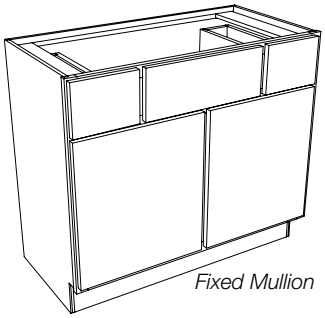

Fixed Mullion	Fixed Mullion
VCC3618	**VCC3621**
VCC3918	**VCC3921**
VCC4218	**VCC4221**

DESIGN CONSIDERATIONS

31½" High - 18", 21" Deep

- Not available in Hampton with 5-pc. header
- 36" and 39" wide cabinets specified in a Traditional overlay door style with a 5-piece drawer header will receive a slab drawer header

HOW TO ORDER

- Pricing P-265

Opening width	Dwr	Dwr	Dwr
VCC36__	6"	15"	6"
VCC39__	6"	18"	6"
VCC42__	9"	15"	9"

INSTALLATION TIP

To find center of sink for countertop cutout, divide cabinet width by two.

NOTES/CAUTION

- VCC36__ and VCC39__ are not available in Inset.

Block 8050 Console Sink with Side Drawers

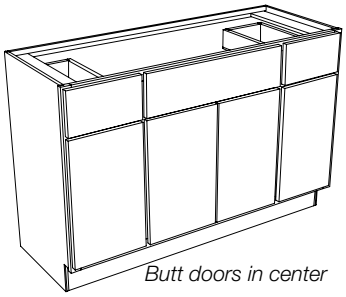

Butt Doors	Butt Doors
2VCC4518	**2VCC4521**
2VCC4818	**2VCC4821**
2VCC5418	**2VCC5421**
2VCC6018	**2VCC6021**

DESIGN CONSIDERATIONS

31½" High - 18", 21" Deep

- When specifying a 2VCC45 in a raised panel door with 3⅜" stiles, the center doors are built with 2¼" stiles. See Cabinetry Specifications for details.

HOW TO ORDER

- Pricing P-265

Opening width	Dwr/Dr	Drs	Dwr/Dr
2VCC45__	9"	18"	9"
2VCC48__	9"	21"	9"
2VCC54__	12"	21"	12"
2VCC60__	15"	21"	15"

INSTALLATION TIP

To find center of sink for countertop cutout, divide cabinet width by two.

© Copyright StarMark Cabinetry FEBRUARY 2022

Block 8055 Vanity Hamper

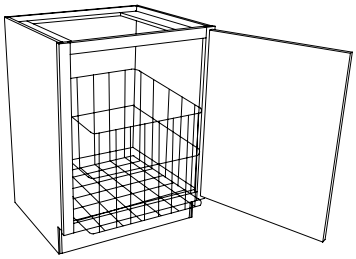

VH1521
VH1821

DESIGN CONSIDERATIONS

31½" High - 21" Deep

- No dimensional modifications allowed
- Removable epoxy coated wire hamper mounted on floor track.

HOW TO ORDER

- Specify **L** or **R** hinging
- Hamper kit also sold separately; see block 10510
- Pricing P-266

NOTES/CAUTION

- Door must open 170° for hamper function in inset.
- Inset concealed hinges not available.

	Hamper Size
VH1521	11⅞" w X 14¾" h X 18" d
VH1821	14¾" w X 19⅜" h X 18" d

Block 8080 Vanity Grooming Organizer

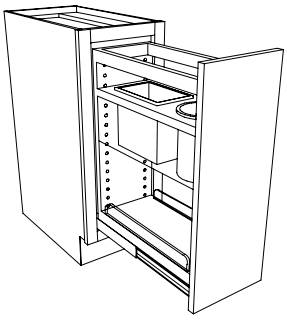

VGO12

DESIGN CONSIDERATIONS

31½" High - 21" Deep

- Cabinet not available 18" deep
- Dimensional modifications not allowed
- Rectangular and round stainless steel bins
- One fixed shelf with non-skid liner and clear poly rails
- Soft close is not available on this cabinet.

HOW TO ORDER

- Pricing P-266

Block 8085 Vanity Organizer

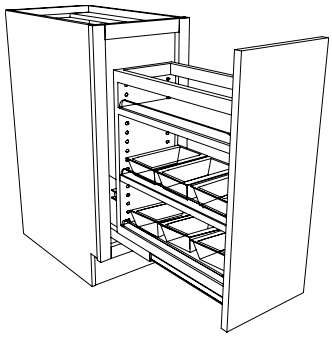

VO12

DESIGN CONSIDERATIONS

31½" High - 21" Deep

- Cabinet not available 18" deep
- Dimensional modifications not allowed
- One fixed shelf and two adjustable shelves with non-skid liner and clear poly rails
- Six removeable clear acrylic bins
- Acrylic bins measure 7" x 4¾" x 2¼"
- Soft close

HOW TO ORDER

- Pricing P-266

© Copyright StarMark Cabinetry FEBRUARY 2022

Block 8100 Tall Vanity Sink Base

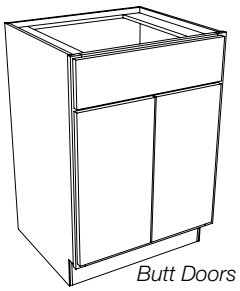

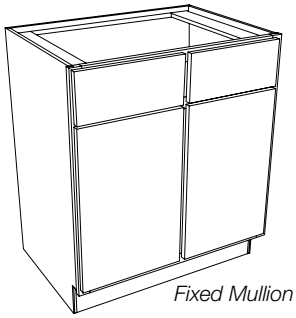

Butt Doors	Butt Doors	Fixed Mullion	Fixed Mullion
2TVS2418	**2TVS2421**	**TVS3018**	**TVS3021**
2TVS2718	**2TVS2721**	**TVS3318**	**TVS3321**
2TVS3018	**2TVS3021**	**TVS3618**	**TVS3621**
2TVS3318	**2TVS3321**		
2TVS3618	**2TVS3621**		
2TVS3918	**2TVS3921**		
2TVS4218	**2TVS4221**		

DESIGN CONSIDERATIONS
34½" High - 18", 21" Deep
• No shelf

HOW TO ORDER
• Pricing P-266

Block 8105 Tall Vanity Reverse Sink Base

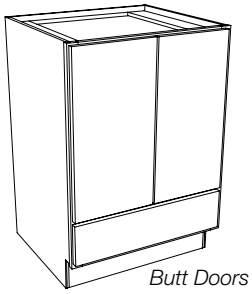

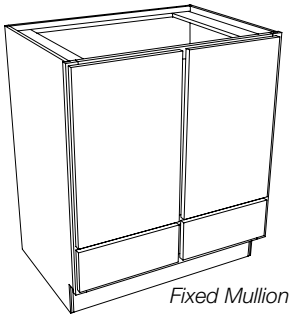

Butt Doors	Butt Doors	Fixed Mullion	Fixed Mullion
2TVR2418	**2TVR2421**	**TVR3018**	**TVR3021**
2TVR2718	**2TVR2721**	**TVR3318**	**TVR3321**
2TVR3018	**2TVR3021**	**TVR3618**	**TVR3621**
2TVR3318	**2TVR3321**		
2TVR3618	**2TVR3621**		
2TVR3918	**2TVR3921**		
2TVR4218	**2TVR4221**		

DESIGN CONSIDERATIONS
34½" High - 18", 21" Deep
• No shelf

HOW TO ORDER
• Pricing P-267

INSTALLATION TIP
Not recommended for floor mounted water lines.
May interfere with drawer operation.

Block 8110 Tall Vanity Sink Base with Full Height Door

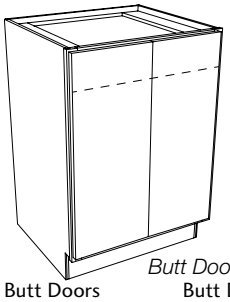

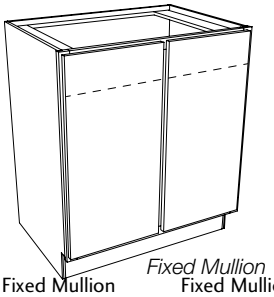

Butt Doors	Butt Doors	Fixed Mullion	Fixed Mullion
2TVF2418	**2TVF2421**	**TVF3018**	**TVF3021**
2TVF2718	**2TVF2721**	**TVF3318**	**TVF3321**
2TVF3018	**2TVF3021**	**TVF3618**	**TVF3621**
2TVF3318	**2TVF3321**		
2TVF3618	**2TVF3621**		
2TVF3918	**2TVF3921**		
2TVF4218	**2TVF4221**		

DESIGN CONSIDERATIONS
34½" High - 18", 21" Deep
• No shelf
• Apron behind doors conceals sink bowl

HOW TO ORDER
• Pricing P-267

© Copyright StarMark Cabinetry **FEBRUARY 2022**

Block 8115 Tall Vanity Base

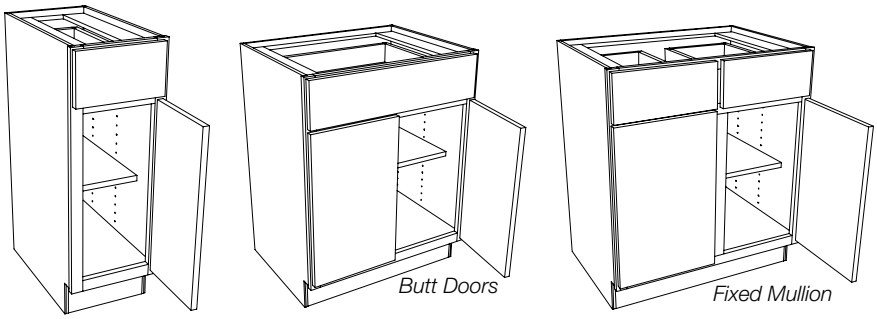

DESIGN CONSIDERATIONS
34½" High - 18", 21" Deep
- 1 adjustable ⅔ depth shelf

HOW TO ORDER
- Specify **L** or **R** hinging on Single Door cabinet
- Pricing P-268

Single Door	Single Door	Butt Doors	Butt Doors	Fixed Mullion	Fixed Mullion
TVB1218	**TVB1221**	**2TVB2718**	**2TVB2721**	**TVB3018**	**TVB3021**
TVB1518	**TVB1521**	**2TVB3018**	**2TVB3021**	**TVB3318**	**TVB3321**
TVB1818	**TVB1821**	**2TVB3318**	**2TVB3321**	**TVB3618**	**TVB3621**
TVB2118	**TVB2121**	**2TVB3618**	**2TVB3621**		
TVB2418	**TVB2421**	**2TVB3918**	**2TVB3921**		
		2TVB4218	**2TVB4221**		

Block 8118 Tall Vanity Three Drawer Base

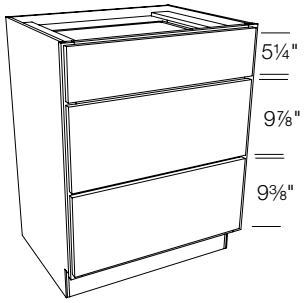

DESIGN CONSIDERATIONS
34½" High - 18", 21" Deep

HOW TO ORDER
- Pricing P-268

TV3DBA1218	**TV3DBA2718**	**TV3DBA1221**	**TV3DBA2721**
TV3DBA1518	**TV3DBA3018**	**TV3DBA1521**	**TV3DBA3021**
TV3DBA1818	**TV3DBA3318**	**TV3DBA1821**	**TV3DBA3321**
TV3DBA2118	**TV3DBA3618**	**TV3DBA2121**	**TV3DBA3621**
TV3DBA2418	**TV3DBA3918**	**TV3DBA2421**	**TV3DBA3921**
	TV3DBA4218		**TV3DBA4221**

Block 8120 Tall Vanity Drawer Base

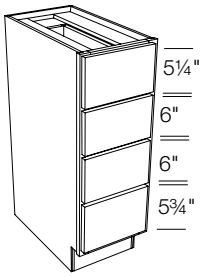

DESIGN CONSIDERATIONS
34½" High - 18", 21" Deep

HOW TO ORDER
- Pricing P-268

TVDB1218	**TVDB2718**	**TVDB1221**	**TVDB2721**
TVDB1518	**TVDB3018**	**TVDB1521**	**TVDB3021**
TVDB1818	**TVDB3318**	**TVDB1821**	**TVDB3321**
TVDB2118	**TVDB3618**	**TVDB2121**	**TVDB3621**
TVDB2418	**TVDB3918**	**TVDB2421**	**TVDB3921**
	TVDB4218		**TVDB4221**

© Copyright StarMark Cabinetry **FEBRUARY 2022**

TALL COMBINATION SINK AND DRAWER BASE

For blocks

8130	**8138**
8132	**8140**
8133	**8143**
8135	

DESIGN CONSIDERATIONS

34½" High - 18", 21" Deep

HOW TO ORDER

- Changing opening sizes by 3" increments is a no charge option

Block 8130 Tall Combination Sink and Drawer Base

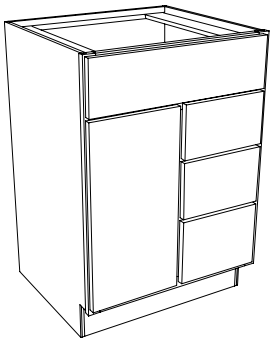

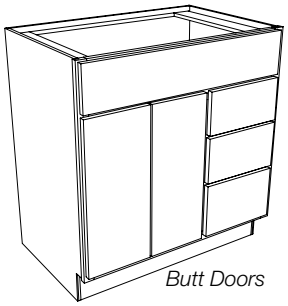

Single Door
TVSD2418
TVSD2718
TVSD3018

TVSD2421
TVSD2721
TVSD3021

Butt Doors
2TVSD3318
2TVSD3618

2TVSD3321
2TVSD3621

DESIGN CONSIDERATIONS

34½" High - 18", 21" Deep

- Not available in Hampton with 5-pc. header
- When specifying a TVSD24, 2TVSD33 or 2TVSD36 in a raised panel door with 3⅜" stiles, the door is built with 2¼" stiles. See Cabinetry Specifications for details.

HOW TO ORDER

- Specify **L** or **R** hinging on Single Door cabinet
- Drawer stack is on the right unless your order specifies Left
- Pricing P-269

Opening width	Door	Drawer
TVSD24__	9"	9"
TVSD27__	12"	9"
TVSD30__	15"	9"
Butt doors		
2TVSD33__	18"	9"
2TVSD36__	18"	12"

INSTALLATION TIP

To find center of sink for countertop cutout, divide cabinet width by two.

Block 8130 Tall Combination Sink and Drawer Base

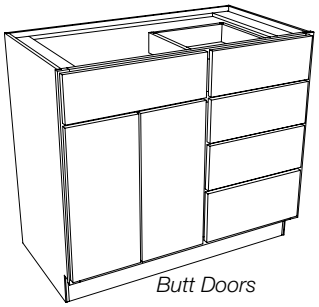

Butt Doors
2TVSD3918
2TVSD4218
2TVSD4518
2TVSD4818

Butt Doors
2TVSD3921
2TVSD4221
2TVSD4521
2TVSD4821

DESIGN CONSIDERATIONS

34½" High - 18", 21" Deep

- When specifying a 2TVSD39 in a raised panel door with 3⅜" stiles, the door is built with 2¼" stiles. See Cabinetry Specifications for details.

HOW TO ORDER

- Drawer stack is on the right unless your order specifies Left
- Pricing P-269

Opening width	Door	Drawer
2TVSD39__	18"	15"
2TVSD42__	21"	15"
2TVSD45__	24"	15"
2TVSD48__	27"	15"

INSTALLATION TIP

To find center of sink for countertop cutout, add frame stile width to half the width of door opening.

© Copyright StarMark Cabinetry **FEBRUARY 2022**

Block 8132 Tall Combination Sink and Two Drawer Base

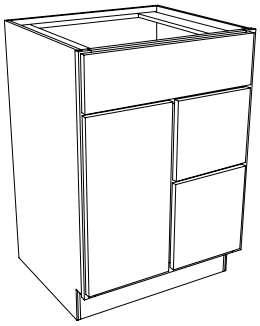

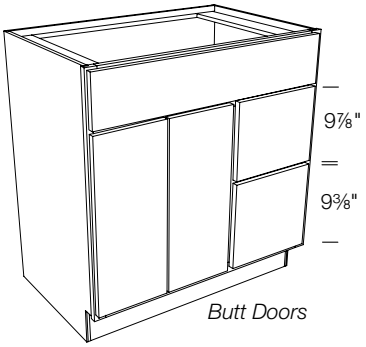

Single Door
TVS2D2418
TVS2D2718
TVS2D3018

TVS2D2421
TVS2D2721
TVS2D3021

Butt Doors
2TVS2D3318
2TVS2D3618

2TVS2D3321
2TVS2D3621

DESIGN CONSIDERATIONS

34½" High - 18", 21" Deep

- Not available in Hampton with 5-pc. header
- When specifying a TVS2D24, 2TVS2D33 or 2TVS2D36 in a raised panel door with 3⅜" stiles, the door is built with 2¼" stiles. See Cabinetry Specifications for details.

HOW TO ORDER

- Specify **L** or **R** hinging on Single Door cabinet
- Drawer stack is on the right unless your order specifies Left
- Pricing P-269

Opening width	Door	Drawer
TVS2D24__	9"	9"
TVS2D27__	12"	9"
TVS2D30__	15"	9"
Butt doors		
2TVS2D33__	18"	9"
2TVS2D36__	18"	12"

INSTALLATION TIP

To find center of sink for countertop cutout, divide cabinet width by two.

Block 8133 Tall Combination Sink and Three Drawer Base

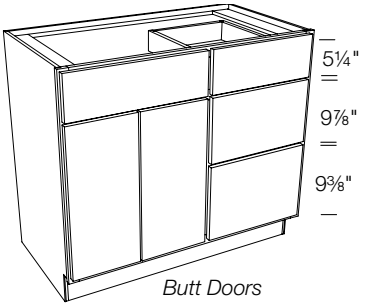

Butt Doors
2TVS3D3918
2TVS3D4218
2TVS3D4518
2TVS3D4818

2TVS3D3921
2TVS3D4221
2TVS3D4521
2TVS3D4821

DESIGN CONSIDERATIONS

34½" High - 18", 21" Deep

- When specifying a 2TVS3D39 in a raised panel door with 3⅜" stiles, the door is built with 2¼" stiles. See Cabinetry Specifications for details.

HOW TO ORDER

- Drawer stack is on the right unless your order specifies Left
- Pricing P-270

Opening width	Door	Drawer
2TVS3D39__	18"	15"
2TVS3D42__	21"	15"
2TVS3D45__	24"	15"
2TVS3D48__	27"	15"

INSTALLATION TIP

To find center of sink for countertop cutout, add frame stile width to half the width of door opening.

© Copyright StarMark Cabinetry FEBRUARY 2022

Block 8135 Tall Combination Two Sinks with Drawer Base

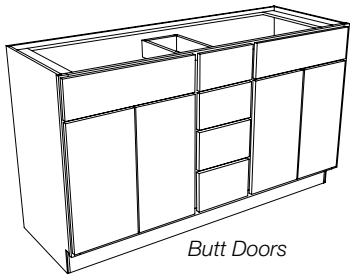

Butt Doors

2TVSDS6018	**2TVSDS6021**
2TVSDS6618	**2TVSDS6621**
2TVSDS7218	**2TVSDS7221**

DESIGN CONSIDERATIONS

34½" High - 18", 21" Deep

HOW TO ORDER

• Pricing P-270

Opening width	Dr	Dwr	Dr
2TVSDS60__	21"	9"	21"
2TVSDS66__	21"	15"	21"
2TVSDS72__	24"	15"	24"

INSTALLATION TIP

To find center of sink for countertop cutout, add frame stile width to half the width of door opening.

Block 8138 Tall Combination Two Sinks with Three Drawer Base

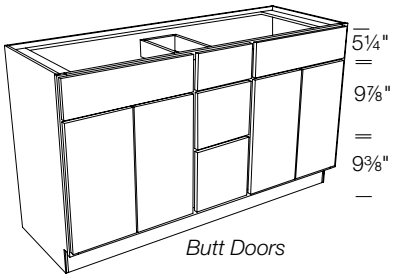

Butt Doors

2TV3DS6018	**2TV3DS6021**
2TV3DS6618	**2TV3DS6621**
2TV3DS7218	**2TV3DS7221**

DESIGN CONSIDERATIONS

34½" High - 18", 21" Deep

HOW TO ORDER

• Pricing P-270

Opening width	Dr	Dwr	Dr
2TV3DS60__	21"	9"	21"
2TV3DS66__	21"	15"	21"
2TV3DS72__	24"	15"	24"

INSTALLATION TIP

To find center of sink for countertop cutout, add frame stile width to half the width of door opening.

Block 8140 Tall Combination with Two Drawer Bases

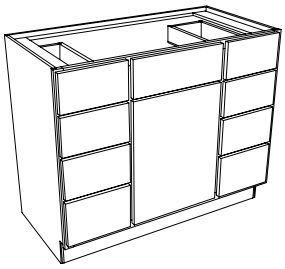

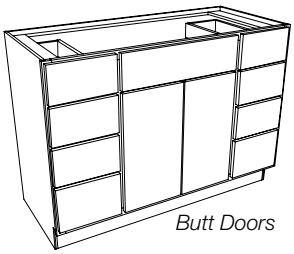

Single Door	Butt Doors	
TVCD4218	**2TVCD4818**	**2TVCD4821**
TVCD4518	**2TVCD5118**	**2TVCD5121**
	2TVCD5418	**2TVCD5421**
		2TVCD5721
TVCD4221	**2TVCD5718**	**2TVCD6021**
TVCD4521	**2TVCD6018**	

DESIGN CONSIDERATIONS

34½" High - 18", 21" Deep

HOW TO ORDER

• Specify **L** or **R** hinging on Single Door cabinet
• Pricing P-270-271

Opening width	Dwr	Dr	Dwr
TVCD42__	9"	15"	9"
TVCD45__	9"	18"	9"
Butt doors			
2TVCD48__	9"	21"	9"
2TVCD51__	9"	24"	9"
2TVCD54__	12"	21"	12"
2TVCD57__	12"	24"	12"
2TVCD60__	12"	27"	12"

© Copyright StarMark Cabinetry FEBRUARY 2022

Block 8143 Tall Combination with Three Drawer Bases

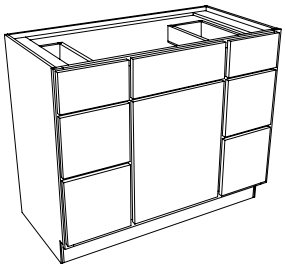

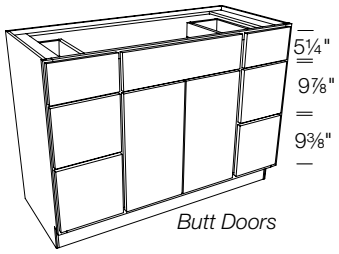

Single Door
TVC3D4218
TVC3D4518

TVC3D4221
TVC3D4521

Butt Doors
2TVC3D4818 **2TVC3D4821**
2TVC3D5118 **2TVC3D5121**
2TVC3D5418 **2TVC3D5421**
2TVC3D5718 **2TVC3D5721**
2TVC3D6018 **2TVC3D6021**

DESIGN CONSIDERATIONS
34½" High - 18", 21" Deep

HOW TO ORDER
- Specify **L** or **R** hinging on Single Door cabinet
- Pricing P-271

Opening width	Dwr	Dr	Dwr
TVC3D42__	9"	15"	9"
TVC3D45__	9"	18"	9"
Butt doors			
2TVC3D48__	9"	21"	9"
2TVC3D51__	9"	24"	9"
2TVC3D54__	12"	21"	12"
2TVC3D57__	12"	24"	12"
2TVC3D60__	12"	27"	12"

Block 8145 Tall Console Sink with Side Drawers

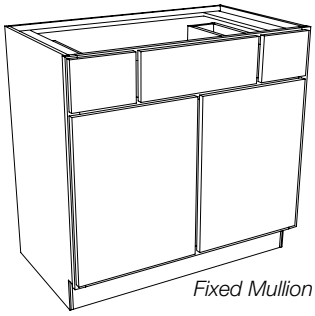

Fixed Mullion
TVCC3618 **TVCC3621**
TVCC3918 **TVCC3921**
TVCC4218 **TVCC4221**

DESIGN CONSIDERATIONS
34½" High - 18", 21" Deep
- Not available in Hampton with 5-pc. header

HOW TO ORDER
- Pricing P-271

Opening width	Dwr	Dwr	Dwr
TVCC36__	6"	15"	6"
TVCC39__	6"	18"	6"
TVCC42__	9"	15"	9"

INSTALLATION TIP
To find center of sink for countertop cutout, divide cabinet width by two.

NOTES/CAUTION
- TVCC36__ and TVCC39__ are not available in Inset.

Block 8150 Tall Console Sink with Side Drawers

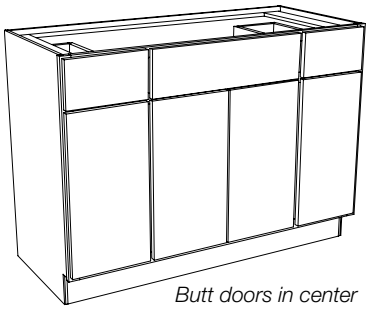

2TVCC4518 **2TVCC4521**
2TVCC4818 **2TVCC4821**
2TVCC5418 **2TVCC5421**
2TVCC6018 **2TVCC6021**

DESIGN CONSIDERATIONS
34½" High - 18", 21" Deep
- When specifying a 2TVCC45 in a raised panel door with 3⅜" stiles, the center doors are built with 2¼" stiles. See Cabinetry Specifications for details.

HOW TO ORDER
- Pricing P-272

Opening width	Dwr/Dr	Drs	Dwr/Dr
2TVCC45__	9"	18"	9"
2TVCC48__	9"	21"	9"
2TVCC54__	12"	21"	12"
2TVCC60__	15"	21"	15"

INSTALLATION TIP
To find center of sink for countertop cutout, divide cabinet width by two.

© Copyright StarMark Cabinetry FEBRUARY 2022

Block 8155 Vanity Hamper Pull Out

NEW! I

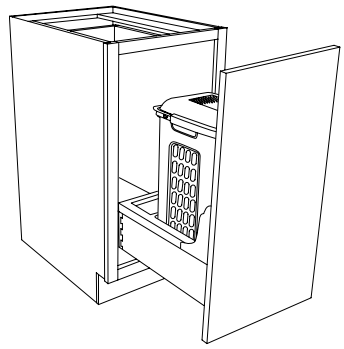

TVWHMP24

DESIGN CONSIDERATIONS

34½" High - 21" Deep

- Dovetailed wood bottom-mount base with full extension glides
- Removable white plastic linen basket with lid
- Includes extra storage space behind basket

HOW TO ORDER

- Pricing P-272

Block 8160 Vanity Waste

NEW! I

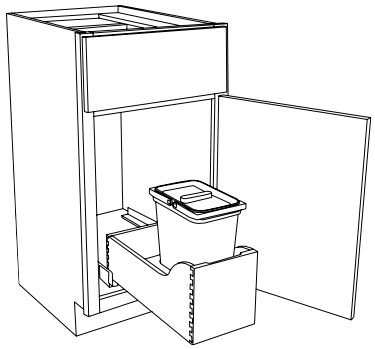

TVWC15

DESIGN CONSIDERATIONS

34½" High - 21" Deep

- Dovetailed wood bottom-mount base with full extension glides
- Includes space for trash bag storage
- 8 quart gray waste container with white lid
- Carry handles flip up to remove waste container from base

HOW TO ORDER

- Specify **L** or **R** hinging
- Pricing P-272

Block 8180 Tall Vanity Grooming Organizer

I

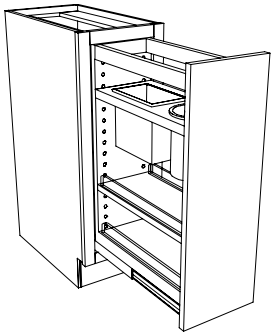

TVGO12

DESIGN CONSIDERATIONS

34½" High - 21" Deep

- Cabinet not available 18" deep
- Dimensional modifications not allowed
- Rectangular and round stainless steel bins safely store hot styling tools, like flat irons, curling irons and blow dryers.
- One fixed shelf and one adjustable shelf with non-skid liner and clear poly rails
- Soft close is not available on this cabinet.

HOW TO ORDER

- Pricing P-272

© Copyright StarMark Cabinetry **FEBRUARY 2022**

Block 8185 Tall Vanity Organizer

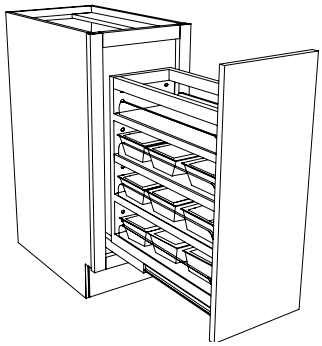

TVO12

DESIGN CONSIDERATIONS

34½" High - 21" Deep

- Cabinet not available 18" deep
- Dimensional modifications not allowed
- One fixed shelf and three adjustable shelves with non-skid liner and clear poly rails
- 9 removeable clear acrylic bins
- Acrylic bins measure 7" x 4¾" x 2¼"
- Soft close

HOW TO ORDER

- Pricing P-272

Block 8190 Vanity Pull Out Grooming

NEW!

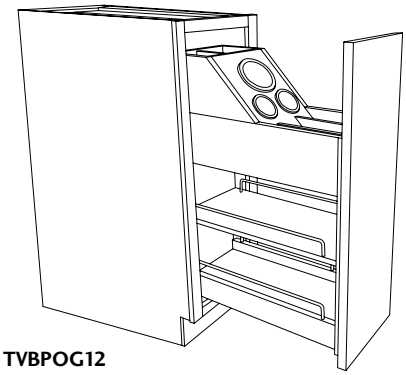

TVBPOG12

DESIGN CONSIDERATIONS

34½" High - 21" Deep

- Wood pull out attached to cabinet door
- One fixed wood shelf and one adjustable wood shelf with chrome railings
- Three round stainless steel bins store hot styling tools, like flat irons, curling irons and blow dryers
- Storage area with wood dividers at top of unit
- Dimensional modifications not allowed

HOW TO ORDER

- Pricing P-273

Block 8192 Vanity Pull Out with Acrylic Tray

NEW!

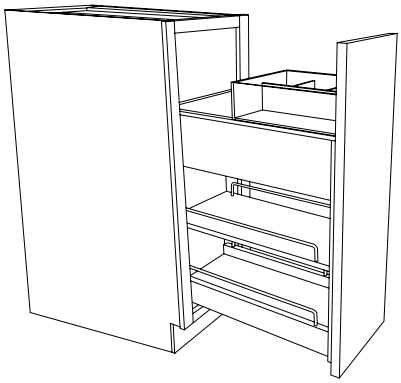

TVBPOT12

DESIGN CONSIDERATIONS

34½" High - 21" Deep

- Wood pull out attached to cabinet door
- One fixed wood shelf and one adjustable wood shelf with chrome railings
- Storage area with wood dividers at top of unit
- Clear acrylic removable vanity tray with three small openings and one large opening
- Dimensional modifications not allowed

HOW TO ORDER

- Pricing P-273

© Copyright StarMark Cabinetry FEBRUARY 2022

Block 8195 Vanity Platform

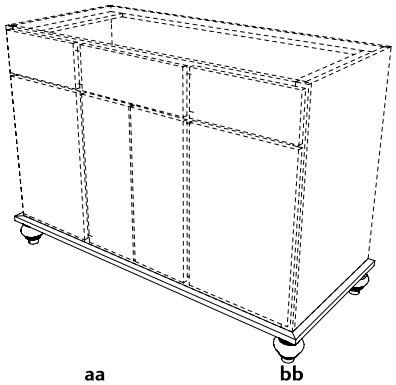

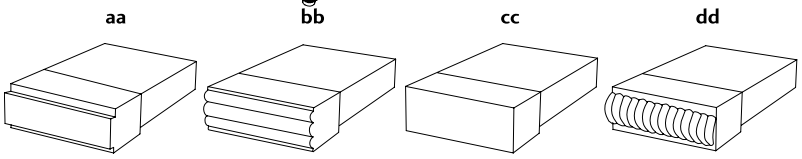

DESIGN CONSIDERATIONS

Alder, Cherry, Hickory, Maple, Oak

- ¾" plywood platform with decorative moulding edges, shown at left
- 5¼" platform height
- Decorative moulding attached to front and side edges
- Grain direction will follow width of platform.
- Sized 1" wider and 1" deeper than standard vanity cabinet, to expose decorative moulding. For example, order a VPF013122 for a VB3021.
- First two numbers in nomenclature are the bun foot design number and the last four numbers are the platform width and depth.
- Designed to create bath furniture

HOW TO ORDER

- Order Vanity cabinet with OMIT TOE KICK option, **OMTOE** Block 9240.
- Select Vanity Platform (1" wider and deeper than vanity cabinet) with desired bun foot.
- Specify decorative moulding front and side edge (**aa, bb, cc, dd**) in Special Information section of the order form.
- Contact Technical Assistance for ordering sizes that are not listed.
- Pricing P-274

2½" Bun Foot Diameter

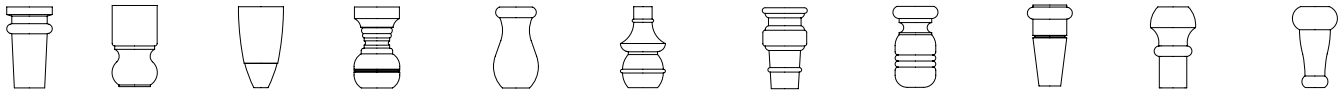

01 02 03 04 05 06 07 08 09 10 11

30" X 21" cabinet size	33" X 21" cabinet size	36" X 21" cabinet size	39" X 21" cabinet size	42" X 21" cabinet size	45" X 21" cabinet size	48" X 21" cabinet size
VPF013122	VPF013422	VPF013722	VPF014022	VPF014322	VPF014622	VPF014922
VPF023122	VPF023422	VPF023722	VPF024022	VPF024322	VPF024622	VPF024922
VPF033122	VPF033422	VPF033722	VPF034022	VPF034322	VPF034622	VPF034922
VPF043122	VPF043422	VPF043722	VPF044022	VPF044322	VPF044622	VPF044922
VPF053122	VPF053422	VPF053722	VPF054022	VPF054322	VPF054622	VPF054922
VPF063122	VPF063422	VPF063722	VPF064022	VPF064322	VPF064622	VPF064922
VPF073122	VPF073422	VPF073722	VPF074022	VPF074322	VPF074622	VPF074922
VPF083122	VPF083422	VPF083722	VPF084022	VPF084322	VPF084622	VPF084922
VPF093122	VPF093422	VPF093722	VPF094022	VPF094322	VPF094622	VPF094922
VPF103122	VPF103422	VPF103722	VPF104022	VPF104322	VPF104622	VPF104922
VPF113122	VPF113422	VPF113722	VPF114022	VPF114322	VPF114622	VPF114922

3½" Bun Foot Diameter

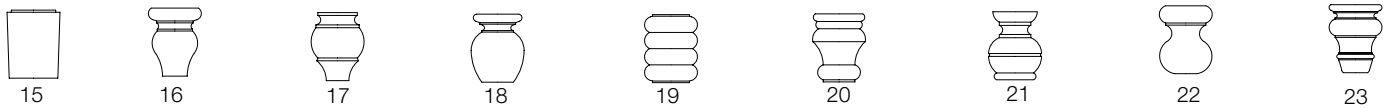

15 16 17 18 19 20 21 22 23

30" X 21" cabinet size	33" X 21" cabinet size	36" X 21" cabinet size	39" X 21" cabinet size	42" X 21" cabinet size	45" X 21" cabinet size	48" X 21" cabinet size
VPF153122	VPF153422	VPF153722	VPF154022	VPF154322	VPF154622	VPF154922
VPF163122	VPF163422	VPF163722	VPF164022	VPF164322	VPF164622	VPF164922
VPF173122	VPF173422	VPF173722	VPF174022	VPF174322	VPF174622	VPF174922
VPF183122	VPF183422	VPF183722	VPF184022	VPF184322	VPF184622	VPF184922
VPF193122	VPF193422	VPF193722	VPF194022	VPF194322	VPF194622	VPF194922
VPF203122	VPF203422	VPF203722	VPF204022	VPF204322	VPF204622	VPF204922
VPF213122	VPF213422	VPF213722	VPF214022	VPF214322	VPF214622	VPF214922
VPF223122	VPF223422	VPF223722	VPF224022	VPF224322	VPF224622	VPF224922
VPF233122	VPF233422	VPF233722	VPF234022	VPF234322	VPF234622	VPF234922

© Copyright StarMark Cabinetry FEBRUARY 2022

Block 8195 Vanity Platform

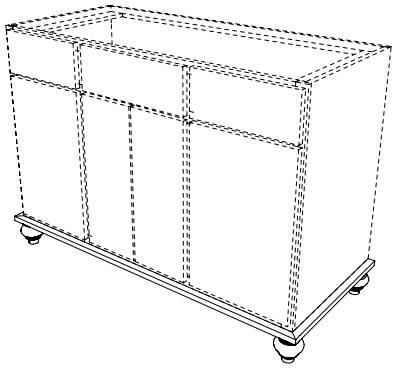

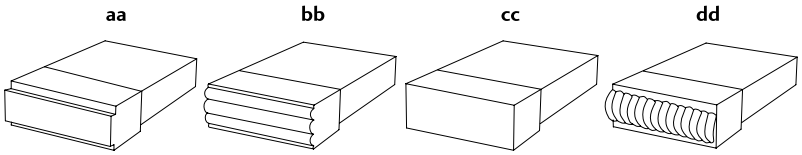

DESIGN CONSIDERATIONS

Alder, Cherry, Hickory, Maple, Oak

- ¾" plywood platform with decorative moulding edges, shown at left
- 5¼" platform height
- Decorative moulding attached to front and side edges
- Grain direction will follow width of platform.
- Sized 1" wider and 1" deeper than standard vanity cabinet, to expose decorative moulding. For example, order a VPF013122 for a VB3021.
- First two numbers in nomenclature are the bun foot design number and the last four numbers are the platform width and depth.
- Designed to create bath furniture

HOW TO ORDER

- Order Vanity cabinet with OMIT TOE KICK option, **OMTOE** Block 9240.
- Select Vanity Platform (1" wider and deeper than vanity cabinet) with desired bun foot.
- Specify decorative moulding front and side edge (**aa, bb, cc, dd**) in Special Information section of the order form.
- Contact Technical Assistance for ordering sizes that are not listed.
- Pricing P-275-276

4" Bun Foot Diameter

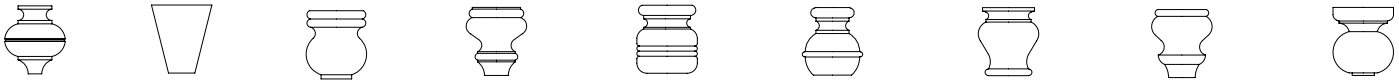

30 31 32 33 34 35 36 37 38

30" X 21" cabinet size	33" X 21" cabinet size	36" X 21" cabinet size	39" X 21" cabinet size	42" X 21" cabinet size	45" X 21" cabinet size	48" X 21" cabinet size
VPF303122	VPF303422	VPF303722	VPF304022	VPF304322	VPF304622	VPF304922
VPF313122	VPF313422	VPF313722	VPF314022	VPF314322	VPF314622	VPF314922
VPF323122	VPF323422	VPF323722	VPF324022	VPF324322	VPF324622	VPF324922
VPF333122	VPF333422	VPF333722	VPF334022	VPF334322	VPF334622	VPF334922
VPF343122	VPF343422	VPF343722	VPF344022	VPF344322	VPF344622	VPF344922
VPF353122	VPF353422	VPF353722	VPF354022	VPF354322	VPF354622	VPF354922
VPF363122	VPF363422	VPF363722	VPF364022	VPF364322	VPF364622	VPF364922
VPF373122	VPF373422	VPF373722	VPF374022	VPF374322	VPF374622	VPF374922
VPF383122	VPF383422	VPF383722	VPF384022	VPF384322	VPF384622	VPF384922

4½" Bun Foot Diameter

45 46 47 48 49 50 51 52 53 54 55 56

30" X 21" cabinet size	33" X 21" cabinet size	36" X 21" cabinet size	39" X 21" cabinet size	42" X 21" cabinet size	45" X 21" cabinet size	48" X 21" cabinet size
VPF453122	VPF453422	VPF453722	VPF454022	VPF454322	VPF454622	VPF454922
VPF463122	VPF463422	VPF463722	VPF464022	VPF464322	VPF464622	VPF464922
VPF473122	VPF473422	VPF473722	VPF474022	VPF474322	VPF474622	VPF474922
VPF483122	VPF483422	VPF483722	VPF484022	VPF484322	VPF484622	VPF484922
VPF493122	VPF493422	VPF493722	VPF494022	VPF494322	VPF494622	VPF494922
VPF503122	VPF503422	VPF503722	VPF504022	VPF504322	VPF504622	VPF504922
VPF513122	VPF513422	VPF513722	VPF514022	VPF514322	VPF514622	VPF514922
VPF523122	VPF523422	VPF523722	VPF524022	VPF524322	VPF524622	VPF524922
VPF533122	VPF533422	VPF533722	VPF534022	VPF534322	VPF534622	VPF534922
VPF543122	VPF543422	VPF543722	VPF544022	VPF544322	VPF544622	VPF544922
VPF553122	VPF553422	VPF553722	VPF554022	VPF554322	VPF554622	VPF554922
VPF563122	VPF563422	VPF563722	VPF564022	VPF564322	VPF564622	VPF564922

© Copyright StarMark Cabinetry **FEBRUARY 2022**

I available in Inset cabinetry

5" Bun Foot Diameter

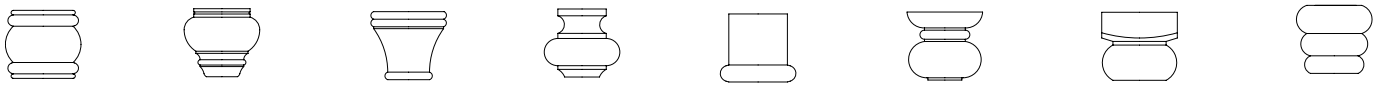

60	61	62	63	64	65	66	67
30" X 21" cabinet size	**33" X 21" cabinet size**	**36" X 21" cabinet size**	**39" X 21" cabinet size**	**42" X 21" cabinet size**	**45" X 21" cabinet size**	**48" X 21" cabinet size**	
VPF603122	VPF603422	VPF603722	VPF604022	VPF604322	VPF604622	VPF604922	
VPF613122	VPF613422	VPF613722	VPF614022	VPF614322	VPF614622	VPF614922	
VPF623122	VPF623422	VPF623722	VPF624022	VPF624322	VPF624622	VPF624922	
VPF633122	VPF633422	VPF633722	VPF634022	VPF634322	VPF634622	VPF634922	
VPF643122	VPF643422	VPF643722	VPF644022	VPF644322	VPF644622	VPF644922	
VPF653122	VPF653422	VPF653722	VPF654022	VPF654322	VPF654622	VPF654922	
VPF663122	VPF663422	VPF663722	VPF664022	VPF664322	VPF664622	VPF664922	
VPF673122	VPF673422	VPF673722	VPF674022	VPF674322	VPF674622	VPF674922	

6" Bun Foot Diameter

75		76		77		78
30" X 21" cabinet size	**33" X 21" cabinet size**	**36" X 21" cabinet size**	**39" X 21" cabinet size**	**42" X 21" cabinet size**	**45" X 21" cabinet size**	**48" X 21" cabinet size**
VPF753122	VPF753422	VPF753722	VPF754022	VPF754322	VPF754622	VPF754922
VPF763122	VPF763422	VPF763722	VPF764022	VPF764322	VPF764622	VPF764922
VPF773122	VPF773422	VPF773722	VPF774022	VPF774322	VPF774622	VPF774922
VPF783122	VPF783422	VPF783722	VPF784022	VPF784322	VPF784622	VPF784922

7" Bun Foot Diameter

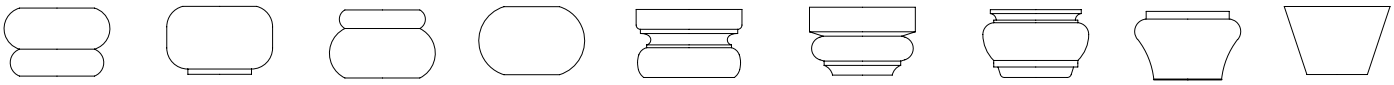

80	81	82	83	84	85	86	87	88
30" X 21" cabinet size	**33" X 21" cabinet size**	**36" X 21" cabinet size**	**39" X 21" cabinet size**	**42" X 21" cabinet size**	**45" X 21" cabinet size**	**48" X 21" cabinet size**		
VPF803122	VPF803422	VPF803722	VPF804022	VPF804322	VPF804622	VPF804922		
VPF813122	VPF813422	VPF813722	VPF814022	VPF814322	VPF814622	VPF814922		
VPF823122	VPF823422	VPF823722	VPF824022	VPF824322	VPF824622	VPF824922		
VPF833122	VPF833422	VPF833722	VPF834022	VPF834322	VPF834622	VPF834922		
VPF843122	VPF843422	VPF843722	VPF844022	VPF844322	VPF844622	VPF844922		
VPF853122	VPF853422	VPF853722	VPF854022	VPF854322	VPF854622	VPF854922		
VPF863122	VPF863422	VPF863722	VPF864022	VPF864322	VPF864622	VPF864922		
VPF873122	VPF873422	VPF873722	VPF874022	VPF874322	VPF874622	VPF874922		
VPF883122	VPF883422	VPF883722	VPF884022	VPF884322	VPF884622	VPF884922		

© Copyright StarMark Cabinetry **FEBRUARY 2022**

Block 8200 Vanity Wall with Two Drawers

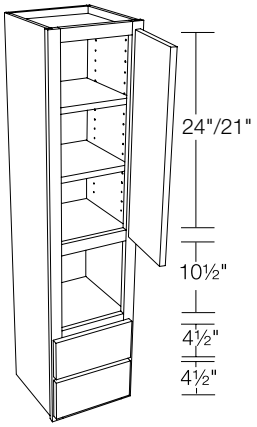

VW2D1248 **VW2D1251**
VW2D1548 **VW2D1551**
VW2D1848 **VW2D1851**

DESIGN CONSIDERATIONS

48", 51" High - 12" Deep

- 48" high has 1 adjustable shelf
- 51" high has 2 adjustable shelves
- Finished veneer interior
- Ogee edge on frame opening
- Finished end panels

HOW TO ORDER

- Specify **L** or **R** hinging
- Pricing P-276

INSTALLATION TIP

Cabinet to be mounted on countertop

Block 8210 Johnny Wall

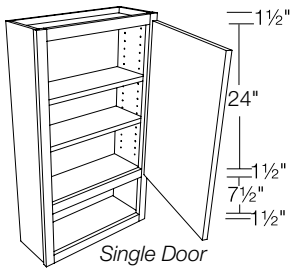

Single Door
VJW2136

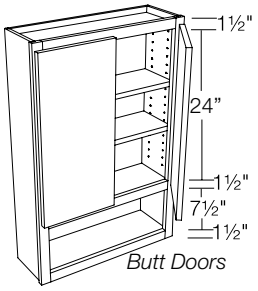

Butt Doors
2VJW2436

DESIGN CONSIDERATIONS

36" High - 8" Deep

- 2 adjustable shelves
- Ogee edge on lower frame opening
- Finished veneer interior
- Finished end panels

HOW TO ORDER

- Specify **L** or **R** hinging on Single Door cabinet
- Pricing P-277

Block 8215 Toilet Topper

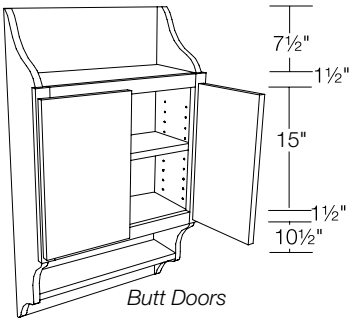

Butt Doors
2VTT2136

DESIGN CONSIDERATIONS

36" High - 8" Deep

- 1 adjustable shelf
- ¾" solid finished end panels
- Finished veneer interior
- Wooden towel bar in lower portion

HOW TO ORDER

- Pricing P-277

© Copyright StarMark Cabinetry FEBRUARY 2022

Block 8220 Vanity Wall

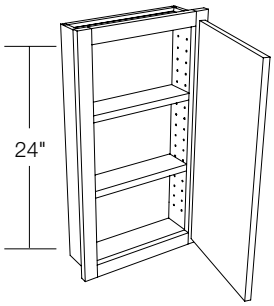

VW1527

DESIGN CONSIDERATIONS

27" High - 4⅝" Deep

- 2 adjustable shelves
- Unit can be surface mounted or recessed
- Finished end panels

HOW TO ORDER

- Specify **L** or **R** hinging
- Pricing P-277

	ROUGH OPENING		
	Width	Height	Depth
¾" endpanels			
VW1527	14¼"	26¼"	3⅞"

NOTES/CAUTION

- Inset concealed hinges not available.

Block 8225 Vanity Wall with Shelf

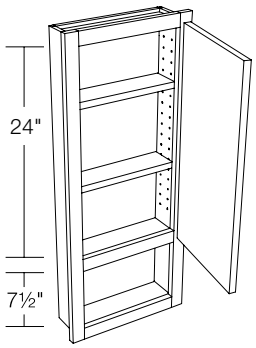

VWS1536
VWS1836

DESIGN CONSIDERATIONS

36" High - 4⅝" Deep

- 2 adjustable shelves
- Unit can be surface mounted or recessed
- Ogee edge on lower frame opening
- Finished veneer interior
- Finished end panels

HOW TO ORDER

- Specify **L** or **R** hinging
- Pricing P-277

	ROUGH OPENING		
	Width	Height	Depth
¾" endpanels			
VWS1536	14¼"	35¼"	3⅞"
VWS1836	17¼"	35¼"	3⅞"

NOTES/CAUTION

- Inset concealed hinges not available.

Block 8300 Vanity Wall Mirror

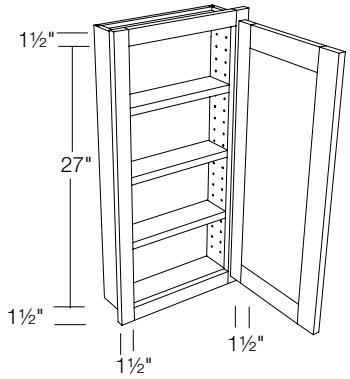

VMC1530
VMC1830
VMC2130

DESIGN CONSIDERATIONS

30" High - 4⅝" Deep

- 3 adjustable shelves
- Unit can be surface mounted or recessed
- Square insert door with mirror
- Finished end panels
- When specifying the Xavier/Xenon door style, the X cross members are removed.

HOW TO ORDER

- Specify **L** or **R** hinging
- Pricing P-277

	ROUGH OPENING		
	Width	Height	Depth
¾" endpanels			
VMC1530	14¼"	29¼"	3⅞"
VMC1830	17¼"	29¼"	3⅞"
VMC2130	20¼"	29¼"	3⅞"

NOTES/CAUTION

- Inset concealed hinges not available.

© Copyright StarMark Cabinetry FEBRUARY 2022

Block 8315 Vanity Tri Mirror

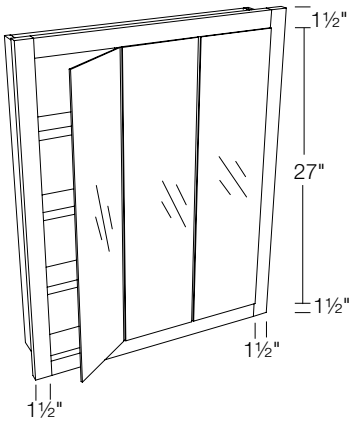

F edge

VTMB2430 **VTMB3630**
VTMC2430 **VTMC3630**

VTMB3030 **VTMB4830**
VTMC3030 **VTMC4830**

DESIGN CONSIDERATIONS

30" High - 4⅝" Deep

- 3 adjustable shelves
- Unit can be surface mounted or recessed
- Mirrored doors
- The "F" edge treatment is standard on face frame. See drawing at left.
- Finished end panels

HOW TO ORDER

- Pricing P-278

	ROUGH OPENING		
	Width	Height	Depth
¾" endpanels			
VTM2430	23¼"	29¼"	3⅞"
VTM3030	29¼"	29¼"	3⅞"
VTM3630	35¼"	29¼"	3⅞"
VTM4830	47¼"	29¼"	3⅞"

- Latch clips available in brass or chrome. Specify **B** (brass) or **C** (chrome).

© Copyright StarMark Cabinetry **FEBRUARY 2022**

WALL HUNG VANITY INSTALLATION

- Cabinet(s) must be securely fastened with sufficient type, quantity and size of screws to wall studs and internal structural wall blocking placed between wall studs
- Do not exceed loading of 25lbs./sq.ft. for countertop and sink
- Do not exceed loading of 15lbs./sq.ft. for contents on shelves and/or drawers
- Installation to be performed by qualified professionals only

Block 8405 Vanity Full Height Wall Hung Short

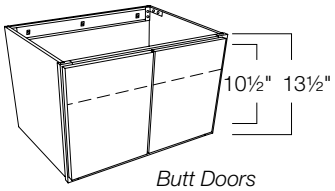

2VFWH2118S	**2VFWH2121S**
2VFWH2418S	**2VFWH2421S**
2VFWH2718S	**2VFWH2721S**
2VFWH3018S	**2VFWH3021S**
2VFWH3318S	**2VFWH3321S**
2VFWH3618S	**2VFWH3621S**
2VFWH3918S	**2VFWH3921S**
2VFWH4218S	**2VFWH4221S**

DESIGN CONSIDERATIONS

13½" High - 18", 21" Deep

- No shelf
- No Toe Kick
- Cabinet mounts to wall with hanging system (included)
- Aluminum hanging bar is 2¼" deep. This may affect faucet drilling.
- Apron behind doors conceals sink bowl
- Not available with a Flush Top

HOW TO ORDER

- Pricing P-278

INSTALLATION TIP

Instructions are posted on OneTouch in Product Info + Resources.

NOTES/CAUTION

- This cabinet is 15⅝" high in Inset.

Block 8410 Vanity Full Height Wall Hung Tall

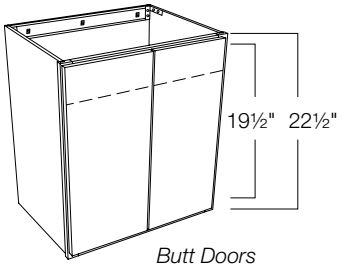

2VFWH2118T	**2VFWH2121T**
2VFWH2418T	**2VFWH2421T**
2VFWH2718T	**2VFWH2721T**
2VFWH3018T	**2VFWH3021T**
2VFWH3318T	**2VFWH3321T**
2VFWH3618T	**2VFWH3621T**
2VFWH3918T	**2VFWH3921T**
2VFWH4218T	**2VFWH4221T**

DESIGN CONSIDERATIONS

22½" High - 18", 21" Deep

- No shelf
- No Toe Kick
- Cabinet mounts to wall with hanging system (included)
- Aluminum hanging bar is 2¼" deep. This may affect faucet drilling.
- Apron behind doors conceals sink bowl
- Not available with a Flush Top

HOW TO ORDER

- Pricing P-279

INSTALLATION TIP

Instructions are posted on OneTouch in Product Info + Resources.

NOTES/CAUTION

- This cabinet is 22 9/16" high in Inset.

© Copyright StarMark Cabinetry **FEBRUARY 2022**

Block 8416 Vanity Two Drawer Wall Hung Short

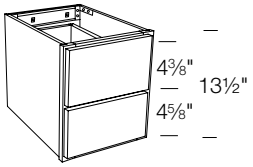

V2DWH1218S
V2DWH1518S
V2DWH1818S
V2DWH2118S
V2DWH2418S
V2DWH1221S
V2DWH1521S
V2DWH1821S
V2DWH2121S
V2DWH2421S

DESIGN CONSIDERATIONS

13½" High - 18", 21" Deep

- No Toe Kick
- Cabinet mounts to wall with hanging system (included)
- Aluminum hanging bar is 2¼" deep. This may affect faucet drilling.
- Not available with a Flush Top
- Not available on Traditional overlay door styles with a five-piece drawer header

HOW TO ORDER

- Pricing P-279

INSTALLATION TIP

Instructions are posted on OneTouch in Product Info + Resources.

NOTES/CAUTION

- This cabinet is 15⅝" high in Inset.

Block 8418 Vanity Two Drawer Wall Hung Tall

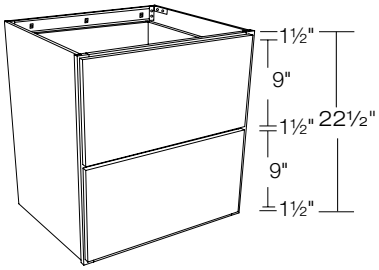

V2DWH1218T
V2DWH1518T
V2DWH1818T
V2DWH2118T
V2DWH2418T
V2DWH1221T
V2DWH1521T
V2DWH1821T
V2DWH2121T
V2DWH2421T

DESIGN CONSIDERATIONS

22½" High - 18", 21" Deep

- No Toe Kick
- Cabinet mounts to wall with hanging system (included)
- Aluminum hanging bar is 2¼" deep. This may affect faucet drilling.
- Not available with a Flush Top

HOW TO ORDER

- Pricing P-279

INSTALLATION TIP

Instructions are posted on OneTouch in Product Info + Resources.

NOTES/CAUTION

- This cabinet is 22⁹⁄₁₆" high in Inset.

Block 8420 Vanity Three Drawer Wall Hung Tall

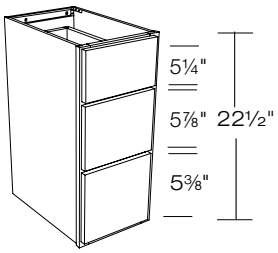

V3DWH1218
V3DWH1518
V3DWH1818
V3DWH2118
V3DWH2418
V3DWH1221
V3DWH1521
V3DWH1821
V3DWH2121
V3DWH2421

DESIGN CONSIDERATIONS

22½" High - 18", 21" Deep

- No Toe Kick
- Cabinet mounts to wall with hanging system (included)
- Aluminum hanging bar is 2¼" deep. This may affect faucet drilling.
- Not available with a Flush Top

HOW TO ORDER

- Pricing P-280

INSTALLATION TIP

Instructions are posted on OneTouch in Product Info + Resources.

NOTES/CAUTION

- This cabinet is 22⁹⁄₁₆" high in Inset.

© Copyright StarMark Cabinetry FEBRUARY 2022

Block 8430 Vanity Combination Sink and Drawer Base Wall Hung

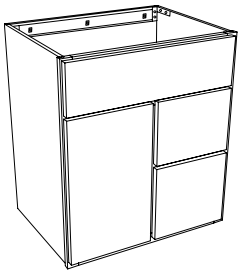

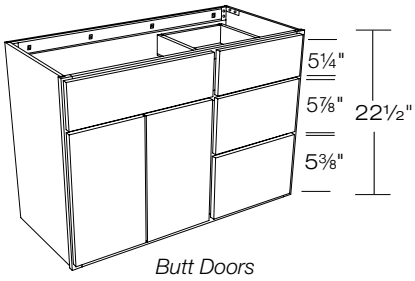

Single Door	Butt Doors	Butt Doors
VSDWH2418	**2VSDWH3018**	**2VSDWH3021**
VSDWH2718	**2VSDWH3318**	**2VSDWH3321**
VSDWH2421	**2VSDWH3618**	**2VSDWH3621**
VSDWH2721	**2VSDWH3918**	**2VSDWH3921**
	2VSDWH4218	**2VSDWH4221**
	2VSDWH4518	**2VSDWH4521**
	2VSDWH4818	**2VSDWH4821**

DESIGN CONSIDERATIONS

22½" High - 18", 21" Deep

- No Toe Kick
- Cabinet mounts to wall with hanging system (included)
- Aluminum hanging bar is 2¼" deep. This may affect faucet drilling.
- Not available with a Flush Top

HOW TO ORDER

- Specify **L** or **R** hinging on Single Door cabinet
- Drawer Stack is on the right unless your order specifies left.
- Pricing P-280

Opening width	Door	Drawer
VSDWH24__	9"	9"
VSDWH27__	12"	9"
Butt doors		
2VSDWH30__	15"	9"
2VSDWH33__	18"	9"
2VSDWH36__	18"	12"
2VSDWH39__	18"	15"
2VSDWH42__	21"	15"
2VSDWH45__	24"	15"
2VSDWH48__	27"	15"

INSTALLATION TIP

To find center of sink for countertop cutout, add frame stile width to half the width of door openings.
Instructions are posted on OneTouch in Product Info + Resources.

NOTES/CAUTION

- This cabinet is 22⁹⁄₁₆" high in Inset.

Block 8440 Vanity Combination with Two Drawer Bases Wall Hung

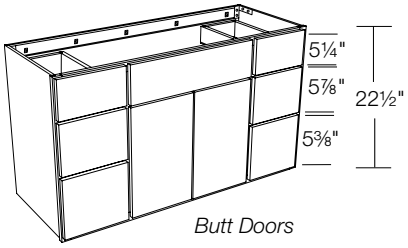

2VCDWH4218	**2VCDWH4221**
2VCDWH4518	**2VCDWH4521**
2VCDWH4818	**2VCDWH4821**
2VCDWH5118	**2VCDWH5121**
2VCDWH5418	**2VCDWH5421**
2VCDWH5718	**2VCDWH5721**
2VCDWH6018	**2VCDWH6021**

DESIGN CONSIDERATIONS

22½" High - 18", 21" Deep

- No Toe Kick
- Cabinet mounts to wall with hanging system (included)
- Aluminum hanging bar is 2¼" deep. This may affect faucet drilling.
- Not available with a Flush Top

HOW TO ORDER

- Pricing P-281

Opening width	Dwr	Dr	Dwr
2VCDWH42__	9"	15"	9"
2VCDWH45__	9"	18"	9"
2VCDWH48__	9"	21"	9"
2VCDWH51__	9"	24"	9"
2VCDWH54__	12"	21"	12"
2VCDWH57__	12"	24"	12"
2VCDWH60__	12"	27"	12"

INSTALLATION TIP

Instructions are posted on OneTouch in Product Info + Resources.

NOTES/CAUTION

- This cabinet is 22⁹⁄₁₆" high in Inset.

© Copyright StarMark Cabinetry FEBRUARY 2022

WALL HUNG VANITY INSTALLATION

- Cabinet(s) must be securely fastened with sufficient type, quantity and size of screws to wall studs and internal structural wall blocking placed between wall studs
- Do not exceed loading of 25lbs./sq.ft. for countertop and sink
- Do not exceed loading of 15lbs./sq.ft. for contents on shelves and/or drawers
- Installation to be performed by qualified professionals only

Block 8460 Combination Two Drawer Stack Wall Hung

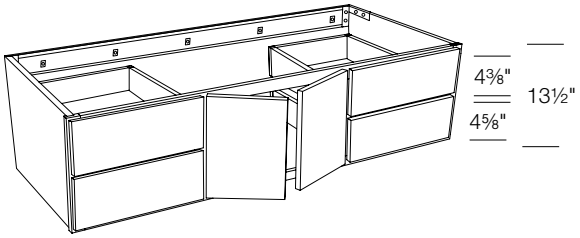

2V4CWH4218
2V4CWH4518
2V4CWH4818
2V4CWH5118
2V4CWH5418
2V4CWH5718
2V4CWH6018
2V4CWH4221
2V4CWH4521
2V4CWH4821
2V4CWH5121
2V4CWH5421
2V4CWH5721
2V4CWH6021

DESIGN CONSIDERATIONS

13½" High - 18", 21" Deep

- No shelf
- No Toe Kick
- Cabinet mounts to wall with hanging system (included)
- Aluminum hanging bar is 2¼" deep. This may affect faucet drilling.
- Not available with a Flush Top
- Not available on Traditional overlay door styles with a five-piece drawer header

HOW TO ORDER

- Pricing P-281

Opening width	Dwr	Dr	Dwr
2V4CWH42__	9"	15"	9"
2V4CWH45__	9"	18"	9"
2V4CWH48__	9"	21"	9"
2V4CWH51__	9"	24"	9"
2V4CWH54__	12"	21"	12"
2V4CWH57__	12"	24"	12"
2V4CWH60__	15"	21"	15"

INSTALLATION TIP

Instructions are posted on OneTouch in Product Info + Resources.

NOTES/CAUTION

- This cabinet is 15⅝" high in Inset.

Block 8470 Six Drawer Front Combination Wall Hung

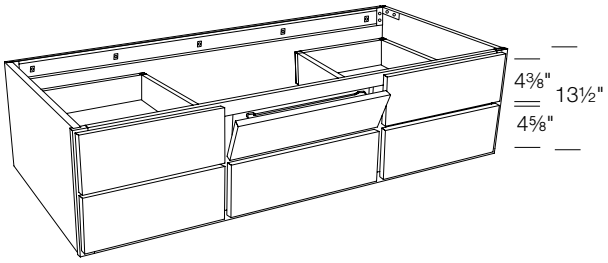

V6DWH3918
V6DWH4218
V6DWH4518
V6DWH4818
V6DWH5118
V6DWH5418
V6DWH5718
V6DWH6018
V6DWH3921
V6DWH4221
V6DWH4521
V6DWH4821
V6DWH5121
V6DWH5421
V6DWH5721
V6DWH6021

DESIGN CONSIDERATIONS

13½" High - 18", 21" Deep

- Stainless steel drawer front bins mounted on two center drawer headers.
- Soft close hinges on drawer front bins
- No Toe Kick
- Cabinet mounts to wall with hanging system (included)
- Aluminum hanging bar is 2¼" deep. This may affect faucet drilling.
- Not available with a Flush Top
- Not available on Traditional overlay door styles with a five-piece drawer header

HOW TO ORDER

- Pricing P-282

Opening width	Dwr	Hdr	Dwr
V6DWH39__	9"	12"	9"
V6DWH42__	10½"	12"	10½"
V6DWH45__	12"	12"	12"
V6DWH48__	12"	15"	12"
V6DWH51__	13½"	15"	13½"
V6DWH54__	15"	15"	15"
V6DWH57__	16½"	15"	16½"
V6DWH60__	18"	15"	18"

INSTALLATION TIP

Instructions are posted on OneTouch in Product Info + Resources.

NOTES/CAUTION

- This cabinet is 15⅝" high in Inset.

© Copyright StarMark Cabinetry FEBRUARY 2022

Block 8500 Linen with Hamper

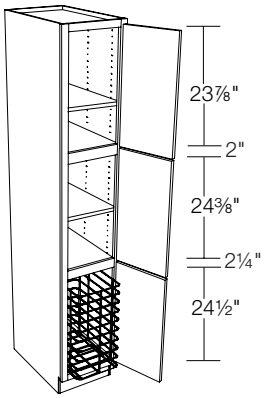

VLH158421
VLH188421
VLH218421

DESIGN CONSIDERATIONS

84" High - 21" Deep

- 2 adjustable shelves
- Cabinet cannot be reduced in depth or width
- Removable epoxy coated wire hamper mounted on floor track.
- Doors will not align with other tall vanity cabinet doors

HOW TO ORDER

- Specify **L** or **R** hinging
- Nomenclature reads: Width, by height, by depth
- Pricing P-282

NOTES/CAUTION

- Door must open 170˚ for hamper function in inset.
- Inset concealed hinges not available.

Block 8505 Linen with Hamper

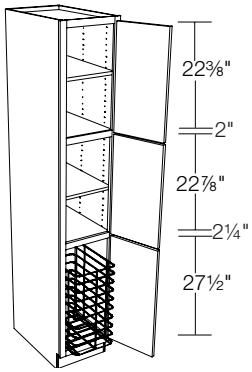

TVLH158421
TVLH188421
TVLH218421

DESIGN CONSIDERATIONS

84" High - 21" Deep

- 2 adjustable shelves
- Cabinet cannot be reduced in depth or width
- Removable epoxy coated wire hamper mounted on floor track.
- To align with tall vanities

HOW TO ORDER

- Specify **L** or **R** hinging
- Nomenclature reads: Width, by height, by depth
- Pricing P-282

NOTES/CAUTION

- Door must open 170˚ for hamper function in inset.
- Inset concealed hinges not available.

Block 8520 Tall Linen

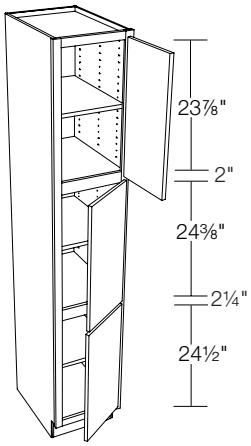

VL158418
VL188418
VL218418
VL248418
VL158421
VL188421
VL218421
VL248421

DESIGN CONSIDERATIONS

84" High -18", 21" Deep

- 3 adjustable shelves
- Doors will not align with other tall vanity cabinet doors

HOW TO ORDER

- Specify **L** or **R** hinging
- Nomenclature reads: Width, by height, by depth
- Pricing P-283

© Copyright StarMark Cabinetry **FEBRUARY 2022**

Block 8525 Tall Linen

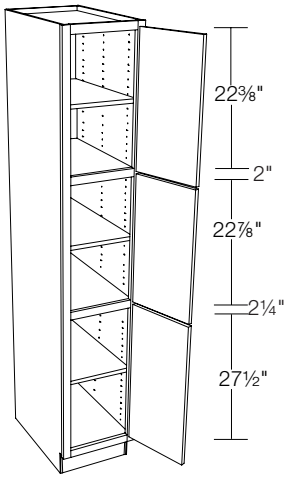

TVL158421
TVL188421
TVL218421
TVL248421

DESIGN CONSIDERATIONS

84″ High - 21″ Deep

- 3 adjustable shelves
- Aligns with tall vanities

HOW TO ORDER

- Specify **L** or **R** hinging
- Nomenclature reads: Width, by height, by depth
- Pricing P-283

Block 8540 Linen with Drawers

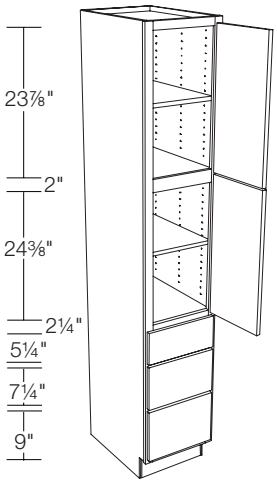

VLD158421
VLD188421
VLD218421
VLD248421

DESIGN CONSIDERATIONS

84″ High - 21″ Deep

- 2 adjustable shelves
- Drawers will not align with tall vanity cabinet doors

HOW TO ORDER

- Specify **L** or **R** hinging
- Nomenclature reads: Width, by height, by depth
- Pricing P-283

© Copyright StarMark Cabinetry **FEBRUARY 2022**

Block 8545 Linen with Drawers

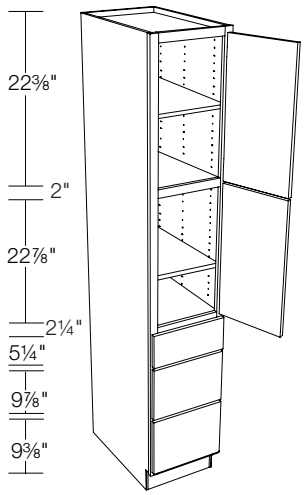

TVLD158421
TVLD188421
TVLD218421
TVLD248421

DESIGN CONSIDERATIONS

84" High - 21" Deep

- 2 adjustable shelves
- Aligns with tall vanities

HOW TO ORDER

- Specify **L** or **R** hinging
- Nomenclature reads: Width, by height, by depth
- Pricing P-284

© Copyright StarMark Cabinetry **FEBRUARY 2022**

Bundled Tailored Vanities

For blocks
8702
8712
8732

TOE TREATMENT OPTIONS

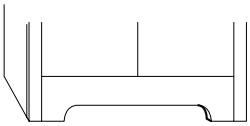

VTTA
Traditional

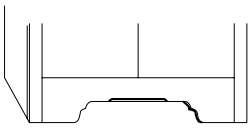

VTTB
Pointed

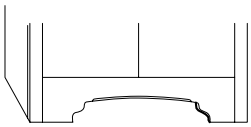

VTTC
Arched

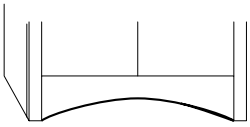

VTTE
Eyebrow

ONLAY OPTIONS

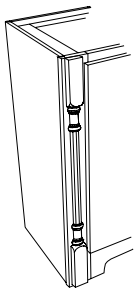

These onlay options align with the top and bottom of the cabinet.

CBBLE
CBBLP
CBBLR

CBBLE
Column Blocks with Reeded moulding

CBBLP
Column Blocks with Plain moulding

CBBLR
Column Blocks with Rope moulding

This onlay option aligns with the cabinet door and does not extend to the floor.

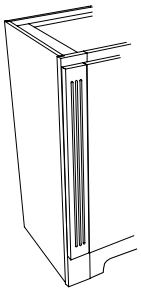

FCCF

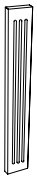

FCCF
Flutes

Block 8702 Tailored Tall Vanity Sink Base with Wide Stiles

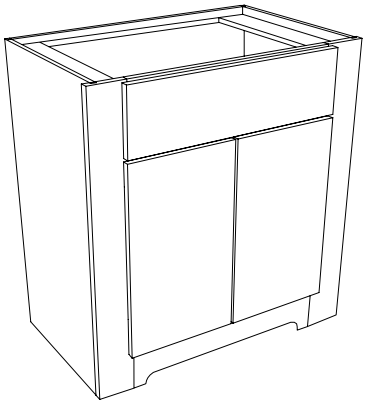

2TVSW2721
2TVSW3021
2TVSW3321
2TVSW3621
2TVSW3921
2TVSW4221
2TVSW4521

DESIGN CONSIDERATIONS

34½" High - 21" Deep
- No shelf or drawer
- 18" deep is available at no additional charge - must specify when ordering
- Toe treatment options illustrated above
- Onlay options for wide stiles illustrated above
- Onlays are factory applied
- Door opening is 9" less than width
- Designed as bath furniture

HOW TO ORDER

- Specify toe treatment and onlay option in the Special Information column of the order form.
- If desired, Omit Toe Kick (block 9240) and specify a Vanity Platform (block 8195).
- Pricing P-284

© Copyright StarMark Cabinetry FEBRUARY 2022

Block 8712 Tailored Tall Vanity Full Height Sink Base with Wide Stiles

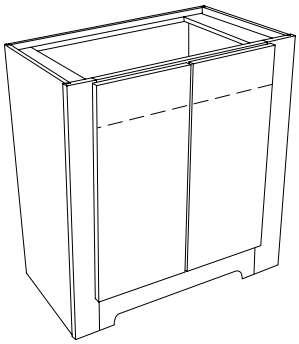

2TVSWF2721
2TVSWF3021
2TVSWF3321
2TVSWF3621
2TVSWF3921
2TVSWF4221
2TVSWF4521

DESIGN CONSIDERATIONS

34½" High - 21" Deep

- No shelf
- Apron behind doors conceals sink bowl
- 18" deep is available at no additional charge - must specify when ordering
- Toe treatment options illustrated on C-326
- Onlay options for wide stiles illustrated on C-326
- Onlays are factory applied
- Door opening is 9" less than width
- Designed as bath furniture

HOW TO ORDER

- Specify toe treatment and onlay option in the Special Information column of the order form.
- If desired, Omit Toe Kick (block 9240) and specify a Vanity Platform (block 8195).
- Pricing P-284

Block 8732 Tailored Tall Vanity Combination Drawer and Sink Base with Wide Stiles

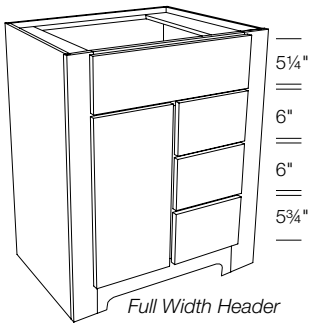

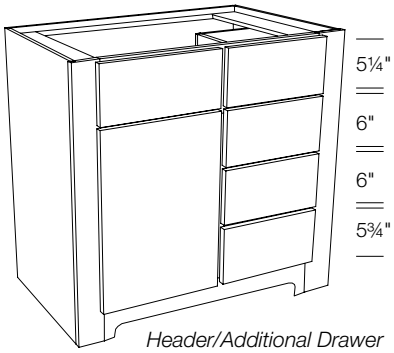

Full Width Header
TVSDW2721
TVSDW3021
TVSDW3321
TVSDW3621
TVSDW3921
TVSDW4221

Header/Additional Drawer
TVSDW4521

DESIGN CONSIDERATIONS

34½" High - 21" Deep

- No shelf
- 18" deep is available at no additional charge - must specify when ordering
- Toe treatment options illustrated above
- Onlay options for wide stiles illustrated above
- Onlays are factory applied
- Designed as bath furniture

HOW TO ORDER

- Drawer stack is on the right unless your order specifies left
- Specify toe treatment and onlay option in the Special Information column of the order form.
- If desired, Omit Toe Kick (block 9240) and specify a Vanity Platform (block 8195).
- Pricing P-285

Cabinet	Opening width	
Width	Door	Drawer
27"	7½"	7½"
30"	9"	9"
33"	12"	9"
36"	12"	12"
39"	15"	12"
42"	15"	15"
45"	18"	15"

© Copyright StarMark Cabinetry FEBRUARY 2022

Bundled Spa Vanities

For blocks
8750
8752
8754
8756

LEG OPTIONS

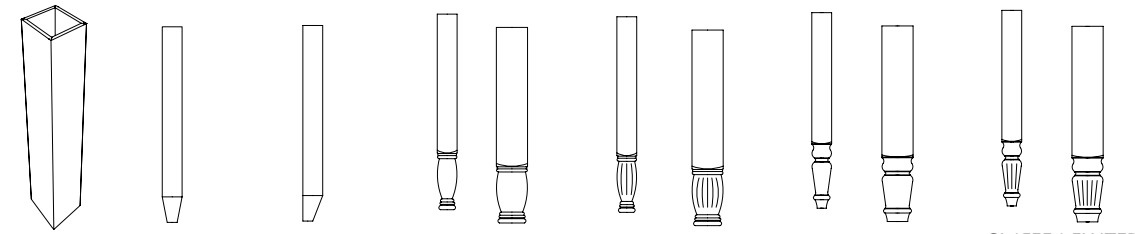

CLM33345 3”
GL05334SQR 3½”
GL06334SQR 3½”
GL42334 PLAIN GL42534 PLAIN 3½” or 5½”
GL42334 FLUTED GL42534 FLUTED 3½” or 5½”
GL45334 PLAIN GL45534 PLAIN 3½” or 5½”
GL45334 FLUTED GL45534 FLUTED 3½” or 5½”

Block 8750 Spa Vanity Sink with Eyebrow Valance

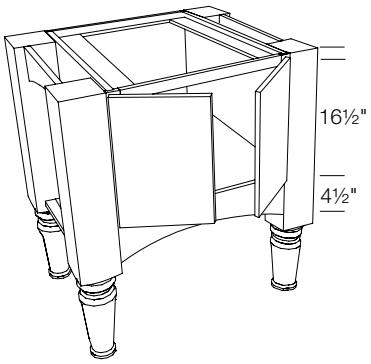

DESIGN CONSIDERATIONS

34½” High - 21” Deep, 22” Deep with leg

- Leg options illustrated above.
- 3” columns, 3½” legs or 5½” legs available.
- Furniture end panels are standard
- 4½” eyebrow valance on both ends and face
- Arrives assembled and crated unless otherwise specified.
- Designed as bath furniture

HOW TO ORDER

- Specify leg option in the Special Information column of the order form.
- If desired, order leg assemblies unattached by specifying **LLOSE** (block 9236) in the Special Information column of the order form.
- Cannot be placed on rush schedule
- Pricing P-286

	A Vanity Width of	Increases to an Overall Width of	
3” columns or 3½” legs			
2VSGEY2435	24”	35”	with 5½” leg
2VSGEY2735	27”	38”	with 5½” leg
2VSGEY3035	30”	41”	with 5½” leg
2VSGEY3335	33”	44”	with 5½” leg
2VSGEY3635	36”	47”	with 5½” leg
5½” legs			
2VSGEY2455	24”	31”	with 3½” leg
2VSGEY2755	27”	34”	with 3½” leg
2VSGEY3055	30”	37”	with 3½” leg
2VSGEY3355	33”	40”	with 3½” leg
2VSGEY3655	36”	43”	with 3½” leg
	24”	30”	with 3” columns
	27”	33”	with 3” columns
	30”	36”	with 3” columns
	33”	39”	with 3” columns
	36”	42”	with 3” columns

© Copyright StarMark Cabinetry FEBRUARY 2022

I available in Inset cabinetry

Bundled Spa Vanities

For blocks
8750
8752
8754
8756

LEG OPTIONS

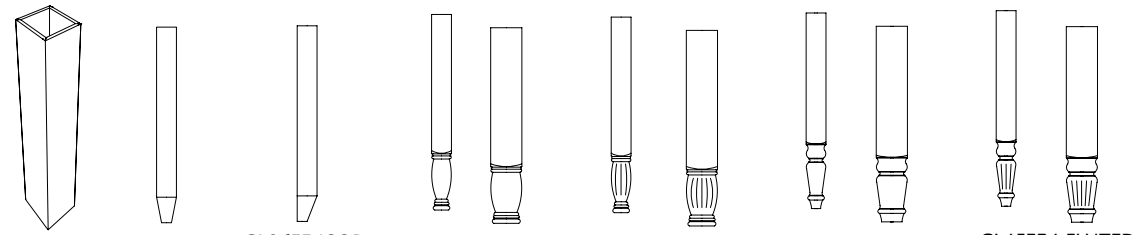

CLM33345 3”
GL05334SQR 3½”
GL06334SQR 3½”
GL42334 PLAIN
GL42534 PLAIN
3½” or 5½”
GL42334 FLUTED
GL42534 FLUTED
3½” or 5½”
GL45334 PLAIN
GL45534 PLAIN
3½” or 5½”
GL45334 FLUTED
GL45534 FLUTED
3½” or 5½”

Block 8752 Spa Vanity Sink and Drawer Combination

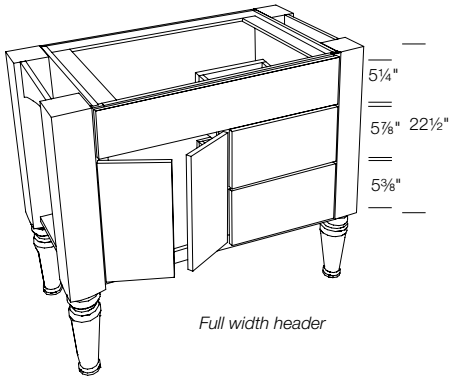

Full width header

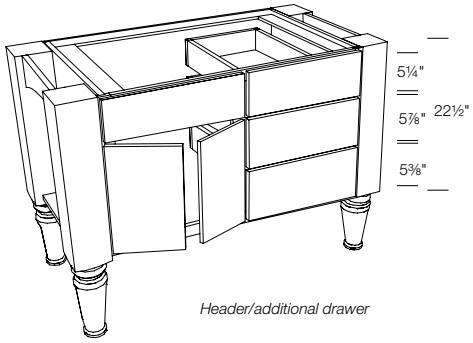

Header/additional drawer

3” columns or 3½” legs, full width header
2VSDG3335
2VSDG3635

5½” legs, full width header
2VSDG3355
2VSDG3655

3” columns or 3½” legs, header/additional drawer
2VSDG3935
2VSDG4235
2VSDG4535
2VSDG4835

5½” legs, header/additional drawer
2VSDG3955
2VSDG4255
2VSDG4555
2VSDG4855

DESIGN CONSIDERATIONS

34½” High - 21” Deep, 22” Deep with leg
- Leg options illustrated on C-330
- 3” columns, 3½” legs or 5½” legs available.
- Furniture end panels are standard
- 4½” eyebrow valance on both ends
- Arrives assembled and crated unless otherwise specified.
- Designed as bath furniture

HOW TO ORDER

- Specify leg option in the Special Information column of the order form.
- If desired, order leg assemblies unattached by specifying **LLOSE** (block 9236) in the Special Information column of the order form.
- Cannot be placed on rush schedule
- Pricing P-286

Cabinet Width	Opening width Door	Drawer
33“	18”	9”
36”	18”	12”
39”	18”	15”
42”	21”	15”
45”	24”	15”
48”	27”	15”

A Vanity Width of	Increases to an Overall Width of	
33”	44”	with 5½” leg
36”	47”	with 5½” leg
39”	50”	with 5½” leg
42”	53”	with 5½” leg
45”	56”	with 5½” leg
48”	59”	with 5½” leg
33”	40”	with 3½” leg
36”	43”	with 3½” leg
39”	46”	with 3½” leg
42”	49”	with 3½” leg
45”	52”	with 3½” leg
48”	55”	with 3½” leg
33”	39”	with 3” columns
36”	42”	with 3” columns
39”	45”	with 3” columns
42”	48”	with 3” columns
45”	51”	with 3” columns
48”	54”	with 3” columns

© Copyright StarMark Cabinetry **FEBRUARY 2022**

Bundled Spa Vanities

For blocks
8750
8752
8754
8756

LEG OPTIONS

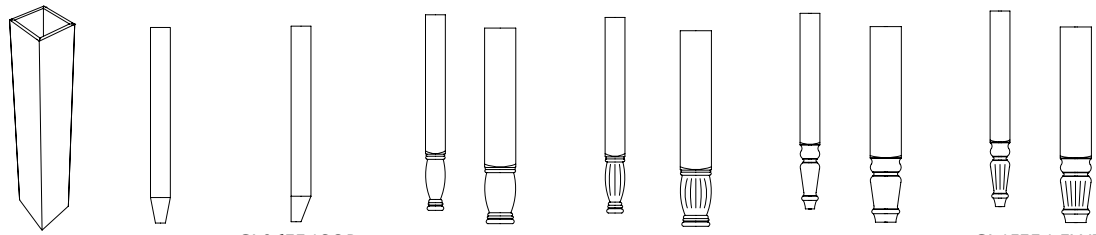

CLM33345 3”
GL05334SQR 3½”
GL06334SQR 3½”
GL42334 PLAIN
GL42534 PLAIN
3½” or 5½”
GL42334 FLUTED
GL42534 FLUTED
3½” or 5½”
GL45334 PLAIN
GL45534 PLAIN
3½” or 5½”
GL45334 FLUTED
GL45534 FLUTED
3½” or 5½”

Block 8754 Spa Vanity Double Sink

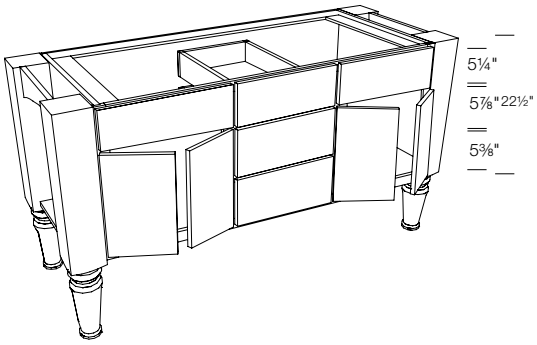

3” columns or 3½” legs
2VDSG5435
2VDSG5735
2VDSG6035

5½” legs
2VDSG5455
2VDSG5755
2VDSG6055

DESIGN CONSIDERATIONS

34½” High - 21” Deep, 22” Deep with leg
- Leg options illustrated above.
- 3” columns, 3½” legs or 5½” legs available.
- Furniture end panels are standard
- 4½” eyebrow valance on both ends
- Arrives assembled and crated unless otherwise specified.
- Designed as bath furniture

HOW TO ORDER

- Specify leg option in the Special Information column of the order form.
- If desired, order leg assemblies unattached by specifying **LLOSE** (block 9236) in the Special Information column of the order form.
- Cannot be placed on rush schedule
- Pricing P-287

Cabinet Width	Opening width Door	Drawer	Door
54“	18”	9”	18”
57”	19½”	9”	19½”
60”	21”	9”	21”

A Vanity Width of	Increases to an Overall Width of	
54”	65”	with 5½” leg
57”	68”	with 5½” leg
60”	71”	with 5½” leg
54”	61”	with 3½” leg
57”	64”	with 3½” leg
60”	67”	with 3½” leg
54”	60”	with 3” columns
57”	63”	with 3” columns
60”	66”	with 3” columns

© Copyright StarMark Cabinetry **FEBRUARY 2022**

Bundled Spa Vanities

For blocks
8750
8752
8754
8756

LEG OPTIONS

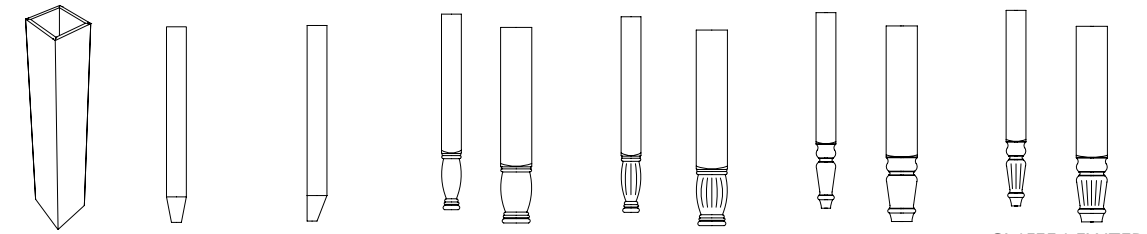

CLM33345 3”
GL05334SQR 3½”
GL06334SQR 3½”
GL42334 PLAIN
GL42534 PLAIN
3½” or 5½”
GL42334 FLUTED
GL42534 FLUTED
3½” or 5½”
GL45334 PLAIN
GL45534 PLAIN
3½” or 5½”
GL45334 FLUTED
GL45534 FLUTED
3½” or 5½”

Block 8756 Spa Vanity Combination Two Drawer Stack

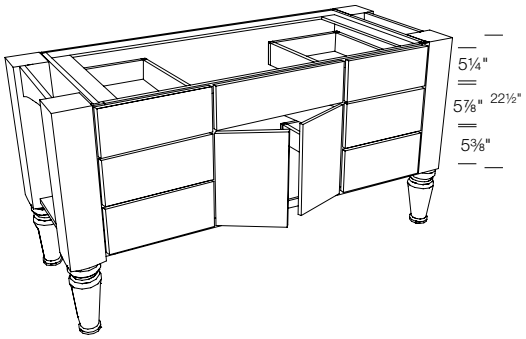

3” columns or 3½” legs
2VCDG4535
2VCDG4835
2VCDG5135
2VCDG5435
2VCDG5735
2VCDG6035

5½” legs
2VCDG4555
2VCDG4855
2VCDG5155
2VCDG5455
2VCDG5755
2VCDG6055

DESIGN CONSIDERATIONS

34½” High - 21” Deep, 22” Deep with leg
- Leg options illustrated on C-332
- 3” columns, 3½” legs or 5½” legs available.
- Furniture end panels are standard
- 4½” eyebrow valance on both ends
- Arrives assembled and crated unless otherwise specified.
- Designed as bath furniture

HOW TO ORDER

- Specify leg option in the Special Information column of the order form.
- If desired, order leg assemblies unattached by specifying **LLOSE** (block 9236) in the Special Information column of the order form.
- Cannot be placed on rush schedule
- Pricing P-287

Cabinet Width	Opening width Drawer	Door	Drawer
45”	9”	18”	9”
48”	9”	21”	9”
51”	9”	24”	9”
54“	12”	21”	12”
57”	12”	24”	12”
60”	12”	27”	12”

A Vanity Width of	Increases to an Overall Width of	
45”	56”	with 5½” leg
48”	59”	with 5½” leg
51”	62”	with 5½” leg
54”	65”	with 5½” leg
57”	68”	with 5½” leg
60”	71”	with 5½” leg
45”	52”	with 3½” leg
48”	55”	with 3½” leg
51”	58”	with 3½” leg
54”	61”	with 3½” leg
57”	64”	with 3½” leg
60”	67”	with 3½” leg
45”	51”	with 3” columns
48”	54”	with 3” columns
51”	57”	with 3” columns
54”	60”	with 3” columns
57”	63”	with 3” columns
60”	66”	with 3” columns

© Copyright StarMark Cabinetry **FEBRUARY 2022**

Bundled Spa Vanities

For blocks
8760
8765
8767
8769

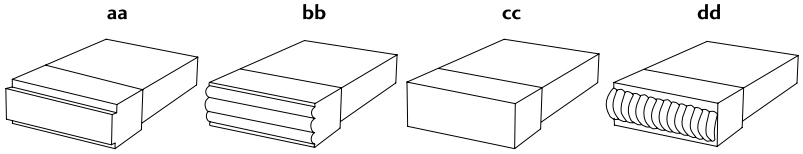

LEG OPTIONS

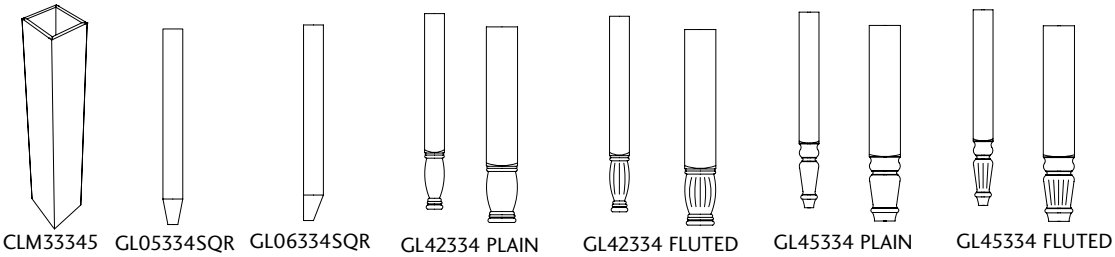

CLM33345 3”
GL05334SQR 3½”
GL06334SQR 3½”
GL42334 PLAIN GL42534 PLAIN 3½” or 5½”
GL42334 FLUTED GL42534 FLUTED 3½” or 5½”
GL45334 PLAIN GL45534 PLAIN 3½” or 5½”
GL45334 FLUTED GL45534 FLUTED 3½” or 5½”

Block 8760 Spa Vanity Sink with Plinth Shelf

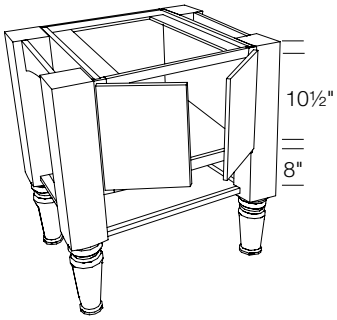

3” columns or 3½” legs
2VSGP2435
2VSGP2735
2VSGP3035
2VSGP3335
2VSGP3635

5½” legs
2VSGP2455
2VSGP2755
2VSGP3055
2VSGP3355
2VSGP3655

A Vanity Width of	Increases to an Overall Width of	
24”	35”	with 5½” leg
27”	38”	with 5½” leg
30”	41”	with 5½” leg
33”	44”	with 5½” leg
36”	47”	with 5½” leg
24”	31”	with 3½” leg
27”	34”	with 3½” leg
30”	37”	with 3½” leg
33”	40”	with 3½” leg
36”	43”	with 3½” leg
24”	30”	with 3” columns
27”	33”	with 3” columns
30”	36”	with 3” columns
33”	39”	with 3” columns
36”	42”	with 3” columns

DESIGN CONSIDERATIONS

34½” High - 21” Deep, 22” Deep with leg
- Leg options illustrated above.
- 3” columns, 3½” legs or 5½” legs available.
- Four edges available for plinth shelf: aa, bb, cc, dd, see illustrations above.
- On Modern overlay, shelf is located 8” below cabinet. On Inset, shelf is located 5⅞” below cabinet.
- Furniture end panels are standard
- 4½” eyebrow valance on both ends
- Arrives assembled and crated unless otherwise specified.
- Designed as bath furniture

HOW TO ORDER

- Specify leg option and plinth shelf edge aa, bb, cc or dd in the Special Information column of the order form.
- If desired, order leg assemblies unattached by specifying **LLOSE** (block 9236) in the Special Information column of the order form.
- Cannot be placed on rush schedule
- Pricing P-287

© Copyright StarMark Cabinetry **FEBRUARY 2022**

Block 8765 Spa Vanity Combination Two Drawer Stack with Plinth Shelf

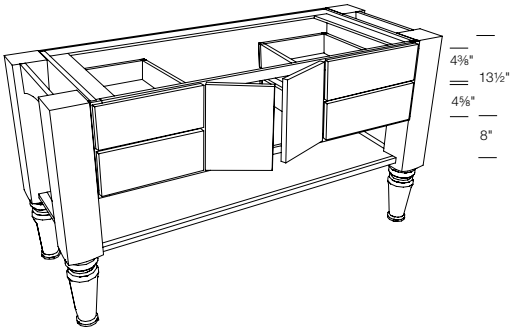

3" columns or 3½" legs
2VCDGP4535
2VCDGP4835
2VCDGP5135
2VCDGP5435

5½" legs
2VCDGP4555
2VCDGP4855
2VCDGP5155
2VCDGP5455

A Vanity Width of	Increases to an Overall Width of	
45"	56"	with 5½" leg
48"	59"	with 5½" leg
51"	62"	with 5½" leg
54"	65"	with 5½" leg
45"	52"	with 3½" leg
48"	55"	with 3½" leg
51"	58"	with 3½" leg
54"	61"	with 3½" leg
45"	51"	with 3" columns
48"	54"	with 3" columns
51"	57"	with 3" columns
54"	60"	with 3" columns

DESIGN CONSIDERATIONS

34½" High - 21" Deep, 22" Deep with leg

- Leg options illustrated on C-334.
- 3" columns, 3½" legs or 5½" legs available.
- Four edges available for plinth shelf: aa, bb, cc, dd, see illustrations on C-334
- On Modern overlay, shelf is located 8" below cabinet. On Inset, shelf is located 5⅞" below cabinet.
- Furniture end panels are standard
- 4½" eyebrow valance on both ends
- Arrives assembled and crated unless otherwise specified.
- Designed as bath furniture
- Not available on Traditional overlay door styles with a five-piece drawer header

HOW TO ORDER

- Specify leg option and plinth shelf edge aa, bb, cc or dd in the Special Information column of the order form.
- If desired, order leg assemblies unattached by specifying **LLOSE** (block 9236) in the Special Information column of the order form.
- Cannot be placed on rush schedule
- Pricing P-288

Cabinet Width	Opening width Drawer	Door	Drawer
45"	9"	18"	9"
48"	9"	21"	9"
51"	9"	24"	9"
54"	12"	21"	12"

Block 8767 Spa Vanity Double Sink with Plinth Shelf

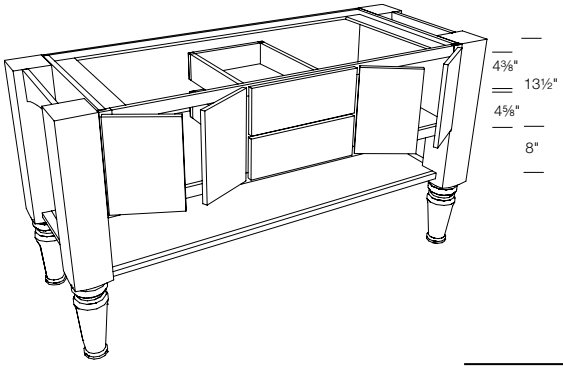

3" columns or 3½" legs
2VDSGP4835
2VDSGP5135
2VDSGP5435

5½" legs
2VDSGP4855
2VDSGP5155
2VDSGP5455

A Vanity Width of	Increases to an Overall Width of	
48"	59"	with 5½" leg
51"	62"	with 5½" leg
54"	65"	with 5½" leg
48"	55"	with 3½" leg
51"	58"	with 3½" leg
54"	61"	with 3½" leg
48"	54"	with 3" columns
51"	57"	with 3" columns
54"	60"	with 3" columns

DESIGN CONSIDERATIONS

34½" High - 21" Deep, 22" Deep with leg

- Leg options illustrated above
- 3" columns, 3½" legs or 5½" legs available.
- Four edges available for plinth shelf: aa, bb, cc, dd, see illustrations above
- On Modern overlay, shelf is located 8" below cabinet. On Inset, shelf is located 5⅞" below cabinet.
- Furniture end panels are standard
- 4½" eyebrow valance on both ends
- Arrives assembled and crated unless otherwise specified.
- Designed as bath furniture
- Not available on Traditional overlay door styles with a five-piece drawer header

HOW TO ORDER

- Specify leg option and plinth shelf edge aa, bb, cc or dd in the Special Information column of the order form.
- If desired, order leg assemblies unattached by specifying **LLOSE** (block 9236) in the Special Information column of the order form.
- Cannot be placed on rush schedule
- Pricing P-288

Cabinet Width	Opening width Door	Drawer	Door
48"	15"	9"	15"
51"	16½"	9"	16½"
54"	18"	9"	18"

© Copyright StarMark Cabinetry FEBRUARY 2022

Bundled Spa Vanities

For blocks
8760
8765
8767
8769

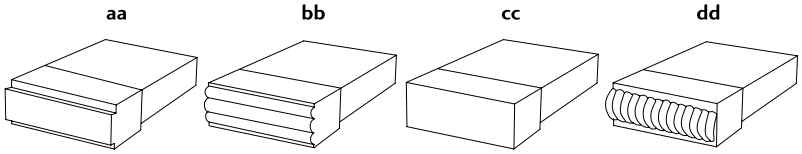

LEG OPTIONS

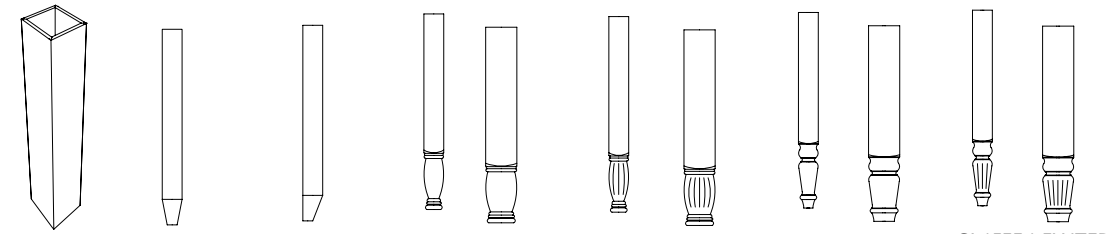

CLM33345	GL05334SQR	GL06334SQR	GL42334 PLAIN GL42534 PLAIN	GL42334 FLUTED GL42534 FLUTED	GL45334 PLAIN GL45534 PLAIN	GL45334 FLUTED GL45534 FLUTED
3”	3½”	3½”	3½” or 5½”	3½” or 5½”	3½” or 5½”	3½” or 5½”

Block 8769 Spa Vanity Six Drawer Front Combination with Plinth Shelf

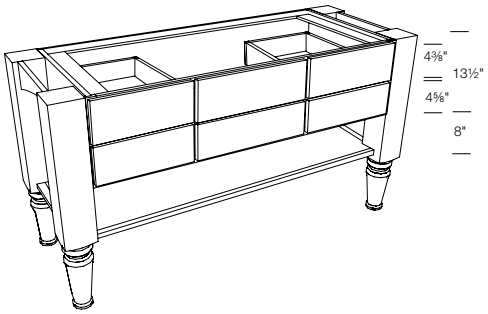

3” columns or 3½” legs
VG6DP3935
VG6DP4235
VG6DP4535
VG6DP4835
VG6DP5135
VG6DP5435

5½” legs
VG6DP3955
VG6DP4255
VG6DP4555
VG6DP4855
VG6DP5155
VG6DP5455

A Vanity Width of	Increases to an Overall Width of	
39”	50”	with 5½” leg
42”	53”	with 5½” leg
45”	56”	with 5½” leg
48”	59”	with 5½” leg
51”	62”	with 5½” leg
54”	65”	with 5½” leg
39”	46”	with 3½” leg
42”	49”	with 3½” leg
45”	52”	with 3½” leg
48”	55”	with 3½” leg
51”	58”	with 3½” leg
54”	61”	with 3½” leg
39”	45”	with 3” columns
42”	48”	with 3” columns
45”	51”	with 3” columns
48”	54”	with 3” columns
51”	57”	with 3” columns
54”	60”	with 3” columns

DESIGN CONSIDERATIONS

34½” High - 21” Deep, 22” Deep with leg

- Leg options illustrated on C-336
- 3” columns, 3½” legs or 5½” legs available.
- Four edges available for plinth shelf: aa, bb, cc, dd, see illustrations on C-336
- On Modern overlay, shelf is located 8” below cabinet. On Inset, shelf is located 5⅞” below cabinet.
- Stainless steel drawer front bins mounted on two center drawer headers
- Soft close hinges on drawer front bins
- Furniture end panels are standard
- 4½” eyebrow valance on both ends
- Arrives assembled and crated unless otherwise specified.
- Designed as bath furniture
- Not available on Traditional overlay door styles with a five-piece drawer header

HOW TO ORDER

- Specify leg option and plinth shelf edge aa, bb, cc or dd in the Special Information column of the order form.
- If desired, order leg assemblies unattached by specifying **LLOSE** (block 9236) in the Special Information column of the order form.
- Cannot be placed on rush schedule
- Pricing P-288

Cabinet Width	Opening width Drawer	Header	Drawer
39”	9”	12”	9”
42”	10½”	12”	10½”
45”	12”	12”	12”
48”	12”	15”	12”
51”	13½”	15”	13½”
54“	15”	15”	15”

© Copyright StarMark Cabinetry FEBRUARY 2022

I available in Inset cabinetry

Block 8800 Tailored Mirror

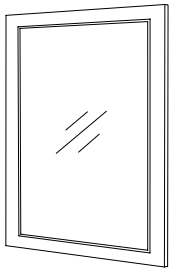

MIRROR1824
MIRROR2424
MIRROR3024
MIRROR3624
MIRROR1830
MIRROR2430
MIRROR3030
MIRROR3630
MIRROR1836
MIRROR2436
MIRROR3036
MIRROR3636

DESIGN CONSIDERATIONS

24", 30", 36" High - ¾" Deep

- Insert door only. Face frame is not included.
- Mirror is factory installed
- Laguna and Lancaster Tailored Mirrors are built with a single mirror. There is no center stile.

HOW TO ORDER

- Contact Technical Assistance for mirrors larger than stated sizes.
- Pricing P-289

Bundled Tailored Mirrors

For block 8805

UPPER MOULDING OPTIONS

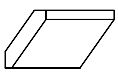

ACCM Arts & Craft Crown Moulding

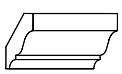

CM Crown Moulding

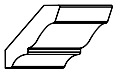

LCM Large Crown Moulding

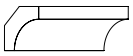

LC Large Cove Moulding

LCCM Large Cove Crown Moulding

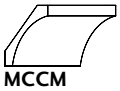

MCCM Medium Cove Crown Moulding

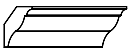

MCM Medium Crown Moulding

RCM Reeded Crown Moulding

SCM Small Crown Moulding

WCM Wide Crown Moulding

LOWER MOULDING OPTIONS

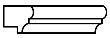

BLSM Beaded Light Shield Moulding

BCE Beveled Countertop Edge

FM Flush Moulding

SCM Small Crown Moulding

Vanity Mirror Upper Moulding Projection

	Adds to mirror height	Projects from wall	Adds to mirror width
ACCM	1 5/8"	3 7/8"	4 3/4"
CM	1 1/8"	2 3/4"	2 1/2"
LC	1/2"	2 3/4"	2 1/2"
LCCM	2 1/4"	4 1/2"	6"
LCM	1 5/8"	3 15/16"	4 7/8"
MCCM	1 1/2"	3 3/4"	4 1/2"
MCM	3/8"	2 5/8"	2 1/4"
RCM	2 1/4"	4 1/2"	6"
SCM	1/2"	2 1/8"	1 1/4"
WCM	2 5/8"	4 1/16"	5 1/8"

Vanity Mirror Lower Moulding Projection

	Adds to mirror height	Projects from wall	Adds to mirror width
BCE	3/4"	1 7/8"	2 1/4"
BLSM	1"	1 7/8"	2 1/2"
FM	3/4"	1 3/4"	2 1/4"
SCM	3/4"	1 3/4"	2"

Block 8805 Tailored Mirror with Mouldings

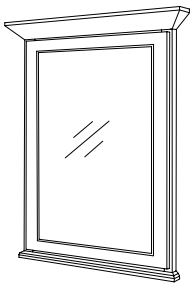

VMIR1824
VMIR2424
VMIR3024
VMIR3624
VMIR1830
VMIR2430
VMIR3030
VMIR3630
VMIR1836
VMIR2436
VMIR3036
VMIR3636

DESIGN CONSIDERATIONS

24", 30", 36" High - 1 1/2" Deep

- Face frame with insert door and attached moulding
- Mirror is factory installed
- Upper moulding options illustrated above
- Lower moulding options illustrated above
- Moulding is factory applied
- 1 1/2" depth does not include moulding projection. See chart above.
- Designed as bath furniture
- Laguna and Lancaster Tailored Mirrors are built with a single mirror. There is no center stile.

HOW TO ORDER

- Specify upper and lower moulding in the Special Information column of the order form.
- Pricing P-289

© Copyright StarMark Cabinetry FEBRUARY 2022

THIS PAGE INTENTIONALLY LEFT BLANK

© Copyright StarMark Cabinetry FEBRUARY 2022

THIS PAGE INTENTIONALLY LEFT BLANK

© Copyright StarMark Cabinetry FEBRUARY 2022

THIS PAGE INTENTIONALLY LEFT BLANK

© Copyright StarMark Cabinetry FEBRUARY 2022

Index

Description	Nomenclature	Page
Accessory Modification	ACMOD	C-331
Add Door	ADDR	C-339
Add Drawer	ADDW	C-339
Add Rail and Floor	ARAF	C-340
Aluminum Frame Insert Doors	IDA	C-345
Angled Cabinets	AF/AS	C-338
Angled Extended Stiles	ESA	C-331
Attached Mullion	ATMUL	C-361
Base Extend Side and Stile Down	BESSD	C-337
Beaded Back	BBACK	C-343
Beaded Flush Ends	FBL/FBR	C-328
Bevel Pull	BP	C-361
Brass Inserts	IDAB	C-358
Chamfered Stiles	CHS	C-332
Chase Cutout Drawer	CCDRW	C-336
Chase Cutouts	CCUT	C-333
Clipped/Angled Stiles	CAS	C-332
Combining Cabinets	COMBCAB	C-339
Cottage Wire Inserts	IDCW	C-359
Custom Mullion Door	MRD, MHM, MSW MBO, MEP, MVN, MDM, MCR, MCX MPT, MGH, MPD	C-351-354
Decorative Glass Inserts	GD	C-355-356
Delete Doors	DELDR	C-360
Dimensional Modifications		C-330
Drawer Partitions	DWPAR	C-336
Edge Treatments	A, DECO, F, H, L, M, Z2	C-362
Extended Stiles	ES	C-331
Face Frame and Door on Cabinet End	FHD, MFF, XDR, XMF	C-329
Face Frame with Door	FFD	C-361
Faux Look Inserts	FL, FP, FC	C-359
Finger Routes	FR	C-361
Finish Veneer Interior	STIN	C-345
Finished Back	FBAC	C-343
Finished Ends	LEF/REF	C-327
Finished Paneled Back	FPBC	C-343
Five Piece Drawer Header Option	5PC HDR	C-364
Flush Bottom/Top	FLT/FLB	C-335
Flush Ends	FFL/FFR	C-327
Flush Void	FLV	C-344
Fluting Treatment	FLUT	C-332
Four Lite Mullion Door	4LITE	C-350
Full Height Doors	FHD	C-360
Full Shelves	FS	C-344
Furniture Ends	FNL/FNR	C-327
Furniture Pegs	DPEGS/SPEGS	C-362
Increased Height Greater than 96"	IH	C-330
Insert Doors	ID	C-345
Integrated Matching Decorator Panel	IMD	C-329
Inverted Frames	IF	C-340
Legs Loose	LLOSE	C-337
Locks	LOCKS	C-362
Maple Natural Veneer Interior	PVIN	C-344
Matching Decorator Panel	MDP	C-328
Mission II Insert Door	MS2	C-350
Mission III Insert Door	MS3	C-350
Mullion Doors	MD	C-349
Oil Rubbed Bronze Frame Insert Doors	IDB	C-345
Omit Toe Kick	OMTOE	C-337
Onlay Attachment	OATCH	C-335
Panel Void	PLV	C-344
Paper Towel Dispenser Chase Cutouts	PTDCC	C-333
Peninsula Cabinets	P	C-338
Pocket Doors	PD	C-360
Pocket Doors with Finished Veneer Interior	PDSTIN	C-360
Post Chase Cutouts	PCUT	C-333
Prairie Mullion Door	PMD	C-350
Profiled Drawer Header	PROFILED HEADER	C-364
Quarter Moon Insert Door	IQ	C-347
Quarter Moon Mullion Door	MQ	C-347-348
Regent Profile Drawer Header	REGENT PROFILE	C-363
Relocate Rail	RAIL	C-340
Relocate Rail and Floor	RRAF	C-340
Resin Inserts	RTH, RBG, RLR, RFL, RWS, RQC	C-358
Scooped Drawers	SCPDWR	C-363
Side Extended Back	SEB	C-338
Stacked Cabinets	SC	C-339
Stained Ends	SEL/SER	C-327
Tempered Clear and Satin Glass Inserts	TCR, TSN	C-357
Textured Tempered Glass Inserts	TLD, TMC	C-357
Thornton Four Lite Mullion Door	TH4LT	C-346
Thornton Insert Door	THOR ID	C-346
Thornton X Door	THMCR	C-346
Thornton Three Lite Mullion Door	TH3LT	C-346
Toe Kick Drawer	BTKDW	C-336
Toe Space - Base Cabinets	TKL/TKR/TKB	C-337
Toe Space - Wall Cabinets	WTOE	C-337
Toe Treatment	TT	C-336
Two-Tone Back	BBKAT/BCKAT	C-343
Valance Top/Bottom Rail	VTR/VBR	C-334
Vegetable Storage Drawer	VSDF	C-363
Vertical Partitions	VP	C-341
Walnut Drawer Box	WLTDRW	C-336
Wide Bottom Rail - Base Cabinets	WBRB	C-335
Wide Bottom/Top Rail - Wall Cabinets	WBR/WTR	C-335
Wide Stiles	WSL/WSR	C-331
Wine Cubes	CUB	C-342
Woven Wire Inserts	IDSL	C-358

© Copyright StarMark Cabinetry FEBRUARY 2022

Index

Description	Nomenclature	Page	Description	Nomenclature	Page

© Copyright StarMark Cabinetry FEBRUARY 2022

Block 9010 Stained Ends

This modification results in stain, sealer and top coat being applied to a cabinet's standard non-veneer end panel.

DESIGN CONSIDERATIONS

- Ends next to ranges, dishwashers, refrigerators and sink fronts may be slightly exposed. Specify a stained end for a stained and finished appearance on the non-veneer end panel.

HOW TO ORDER

- Specify **SEL** (stained end left) or **SER** (stained end right) in the Finished Ends column
- There is no charge for this option.
- If seven or more stained ends are specified on an order, finished end charges will apply.
- Pricing P-293

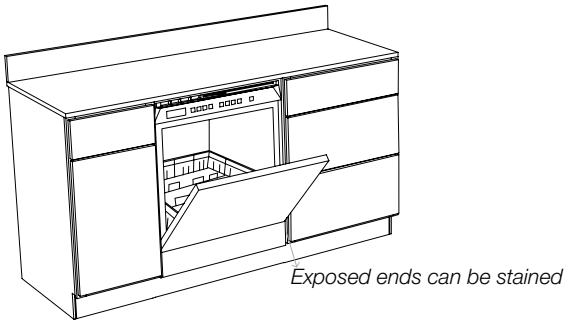

SEL
SER

Block 9020 Finished Ends

This modification replaces a cabinet's standard end panel with veneer

DESIGN CONSIDERATIONS

- If an end will be exposed, specify a finished end for a professional appearance.
- Veneer plywood of the same species is applied to the cabinet end.
- A ¼" reveal is standard with finished ends.
- When specified on a cabinet that has the end panels shifted to the outside, the end panel is automatically upgraded to a Furniture End.

HOW TO ORDER

- Specify **LEF** (left end finished) or **REF** (right end finished) in the Finished Ends Column
- Add charge to cost of cabinet
- Pricing P-293

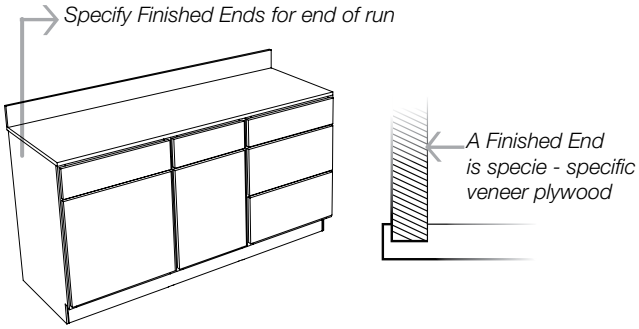

LEF
REF

Block 9030 Furniture Ends

This modification eliminates the ¼" face frame reveal and shifts the end panel to the exterior. There is a 45 degree bevel on the edge of the end panel, against the frame. The end panel is finished.

DESIGN CONSIDERATIONS

- The veneer core plywood end panel is shifted to the exterior, eliminating the ¼" reveal.

HOW TO ORDER

- Specify **FNL** (furniture end left) or **FNR** (furniture end right) in the Finished Ends column
- Add charge to cost of cabinet
- Pricing P-293

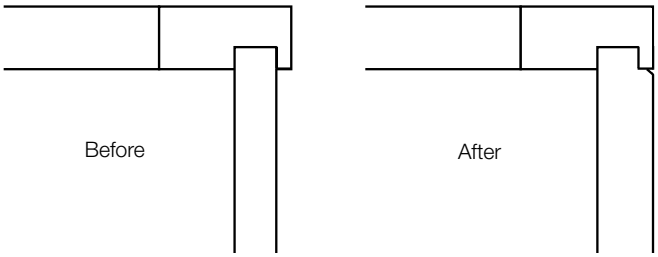

FNL wall
FNR wall

FNL base
FNR base

FNL utility
FNR utility

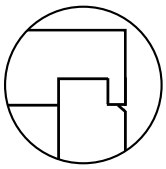

After-close up detail

Block 9040 Flush Ends

This modification eliminates the ¼" reveal and shifts the end panel to the exterior. The end panel and frame are then flushed and finished.

DESIGN CONSIDERATIONS

- A ¾" veneer plywood end panel is shifted to the exterior, eliminating the ¼" reveal.
- Not available in Weathered.

HOW TO ORDER

- Specify **FFL** (flush end left) or **FFR** (flush end right) in the Finished Ends Column
- Add charge to cost of cabinet
- Pricing P-293

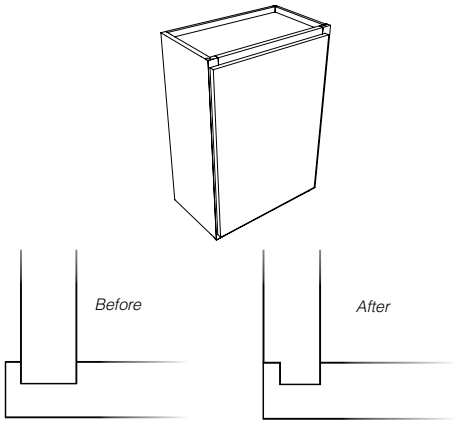

FFL wall
FFR wall
FFL base
FFR base
FFL tall
FFR tall

© Copyright StarMark Cabinetry FEBRUARY 2022

Block 9045 Beaded Flush Ends

This modification replaces a cabinet's standard end panel with ¾" veneer MDF core to eliminate the ¼" reveal. The end panel features decorative beads.

DESIGN CONSIDERATIONS

- A ¾" veneer MDF core end panel is shifted to the exterior, eliminating the ¼" reveal.
- Number of beads based on cabinet depth.
- Not available on cabinets greater than 96" in height.
- Not recommended for walnut finished in Natural. The bead routes highlight the lighter core material against the dark veneer.

HOW TO ORDER

- Specify **FB_L** (beaded flush end left) or **FB_R** (beaded flush end right) in the Finished Ends Column
- Add charge to cost of cabinet
- Pricing P-293

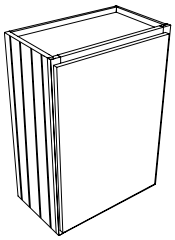

FBWL wall
FBWR wall
FBBL base
FBBR base
FBTL tall
FBTR tall

Block 9050 Matching Decorator Panel

This modification results in a cabinet that has decorative door panels on the side of the cabinet that match the door style.

DESIGN CONSIDERATIONS

- The doors are attached to the cabinet's ¾" ends to create MDP.
- Wall and Stacked Wall cabinets receive door panel(s) to match face of cabinet
- Base and vanity cabinets receive full height door panel(s)
- Tall cabinets - See HelpZone for alignment information.
- Cabinets deeper than 24" receive two door panels of equal size, butted together.
- Mortise and tenon doors greater than 42" high will have a center rail.
- End panel and frame are not flush. The seam is visible.

HOW TO ORDER

- Specify **MDP LEFT** or **MDP RIGHT** in the Special Information section
- Add MDP charge to cost of cabinet
- Pricing P-293

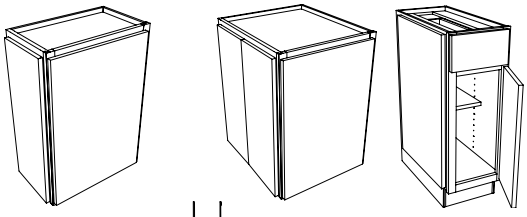

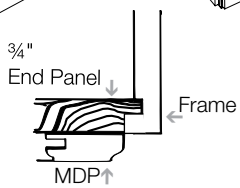

Illustration shows an MDP created with a traditional overlay door.

WMDPL wall
WMDPR wall

BMDPL base
BMDPR base

TMDPL tall
TMDPR tall

UMDPL utility
UMDPR utility

VMDPL vanity
VMDPR vanity

© Copyright StarMark Cabinetry FEBRUARY 2022

Block 9060 Integrated Matching Decorator Panel

This modification results in a cabinet that has decorative door panels built into a ¾" end panel.

DESIGN CONSIDERATIONS

- Authentic door panel built into frame does not align with door on front of cabinet
- Wall and vanity wall cabinets receive panel(s) to match face of cabinet
- Base and vanity base cabinets receive full height panel
- Stacked wall cabinets receive 2 panels of equal size
- Tall cabinets up to 96" high and up to 24" deep receive 2 panels of equal size
- Interior remains standard birch melamine
- Available with all cope and stick door styles.
- Doors greater than 42" high will have a center rail.
- Not available with mitered door styles, or slab doors.
- Cabinets greater than 24" in depth will receive two panels.

HOW TO ORDER

- Specify **IMD LEFT** or **IMD RIGHT** in the Special Information section
- Add IMDP charge to cost of cabinet
- Pricing P-294

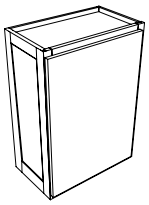

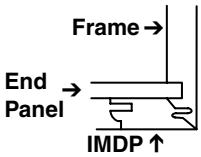

WIMDL wall
WIMDR wall

BIMDL base
BIMDR base

TIMDL tall
TIMDR tall

UIMDL utility
UIMDR utility

VIMDL vanity
VIMDR vanity

Block 9070 Face Frame and Door on Cabinet End

This modification results in a cabinet that has operating doors on the end.

DESIGN CONSIDERATIONS

- Wall, base, utility and vanity cabinets can be ordered with face frame and operating or fixed doors on cabinet ends
- Select from a full height door on the end or doors and/or headers on the end that match the face of the cabinet.
- Base toe kick on face frame side included in price
- Maximum depth of 24" for a single working door. Depths over 24" will receive butt doors or fixed doors.
- When specifying a fixed door, a ½" panel is added to the interior of the cabinet to cover the frame and door.
- When specifying a Face Frame and Door on Cabinet End and a Wide Bottom Rail, the BESSD modification must also be applied to the face frame. See Block 9260.

HOW TO ORDER

- Specify **_FHDL/R/B, _MFFL/R/B, _XDRL/R/B, _XMFL/R/B** in the Special Information section
- Specify **L** or **R** hinges for the FF&D or fixed.
- Add charge to cost of cabinet
- Pricing P-294

NOTES/CAUTION

- See Inset Specification section for information on Face Frame and Door on Cabinet End with Concealed Hinge.

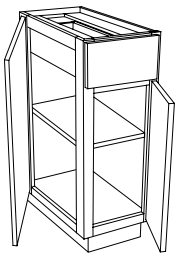

BFHDL

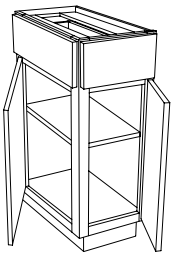

BMFFL

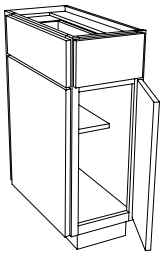

BXMFL

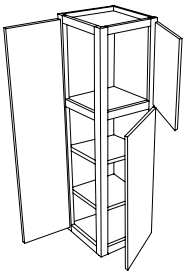

WFHDL

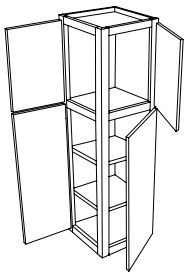

WMFFL

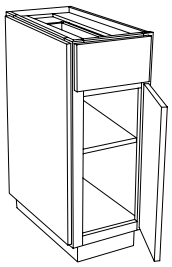

BXDRL

BXMFL

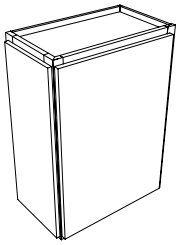

WXMFL

WALL	BASE	TALL- 12" Deep	UTILITY- 24" Deep
WFHDL/R	**BFHDL/R**	**TMFFL/R**	**UMFFL/R**
WMFFL/R	**BMFFL/R**	**TXDRL/R**	**UXDRL/R**
WXDRL/R	**BXDRL/R**	**TXMFL/R**	**UXMFL/R**
WXMFL/R	**BXMFL/R**		

© Copyright StarMark Cabinetry **FEBRUARY 2022**

Block 9080 Dimensional Modifications I

This modification results in a cabinet that is manufactured with the dimensions you specify in 1/16" increments. Certain limitations apply.

DESIGN CONSIDERATIONS

- This catalog notes if dimensional modifications are not available for a certain cabinet.
- Modifications are not allowed on curved cabinets.
- If the depth of the cabinet is increased or decreased, the cabinet will receive a full depth shelf.

NOTE THESE LIMITATIONS

- Wall cabinets can be increased up to 30" deep.
- Wall cabinets greater than 18" deep must be secured to soffit or ceiling OR supported by a full height, panel same depth as cabinet or utility base cabinet, in which case, the other side must also be supported by a wall cabinet with a minimum 12" depth.
- Tall cabinets can be increased up to 30" deep.
- Vanity cabinets can be increased up to 36" deep.
- Base cabinets can be increased up to 36" deep.

NOTE: Maximum depth of drawers and roll trays is 21" (for a 24" deep base). They do not increase in depth with the cabinet.

Depth of Cabinet	Depth of Drawer
Greater than 24"	21"
24"	21"
21"	18"
18"	15"
15"	12"
12"	9"

Unique sizes	Next standard size is used
Example: 14"	9" is used

HOW TO ORDER

- Nomenclature codes

RD	Reduce depth	
RW	Reduce width	
RH	Reduce height	
INCDP		Increase depth
IH		Increase height
IW		Increase width

- To order a cabinet that will be reduced, specify a **standard cabinet** that is the next size larger than the dimensions you want in the Cabinet Number column and specify the **modification** in the Special Information section. For example, to achieve a 32" wide cabinet, specify: **2W3336 RW 1" to 32"**.
- To order a cabinet that will be larger, specify a **standard cabinet** that is the next size smaller than the dimensions you want in the Cabinet Number column and specify the **modification** in the Special Information section. For example, to achieve a 49" high cabinet, specify **W1248 IH 1" to 49"**.
- In most cases, it is less expensive to order combined modifications than to order two single modifications. Calculate both methods to make sure you're getting the best price.
- Pricing P-294-295

Block 9080 Dimensional Modifications cont. I

SINGLE MODIFICATIONS

RD	wall
RD	base
RD	tall
RW	wall
RW	base
RW	tall
IH	wall
IH	base
IH	tall
IW	wall
IW	base
IW	tall
RH	wall
RH	base
RH	tall
INCDP	wall
INCDP	base
INCDP	tall

COMBINED MODIFICATIONS

RD/RW
RD/RH
RD/IH
RW/RH
RW/INCDP
RH/INCDP
INCDP/IH
RW/IH
RD/RW/RH
RD/RW/IH
RW/RH/INCDP
INCDP/IH/RW
IW/RD
IW/RH
IW/INCDP
IW/RD/RH
IW/INCDP/RH
IW/IH
IW/RD/IH
IW/INCDP/IH

To increase a cabinet's height, start with the tallest cabinet possible, and then modify using a selection below.

WALL CABINETS
RD/IH
INCDP/IH
RW/IH
RD/RW/IH
INCDP/IH/RW
IW/IH
IW/RD/IH
IW/INCDP/IH

I Inset only
Increase inset wall, inset utility wall and inset wall base cabinetry depth in ½" increments from 12"-15".

INDIW

Block 9081 Increased Height Greater Than 96" I

DESIGN CONSIDERATIONS

- Use IH102 for cabinets greater than 96" in height and up to 102" in height.
- Use IH120 for cabinets greater than 102" in height and up to 120" in height.

HOW TO ORDER

- Specify **IH102** or **IH120** in the Special Information section.
- Add upcharge to the cost of the cabinet
- Pricing P-295

This modification results in a tall cabinet that is manufactured with the dimensions you specify. Certain limitations apply.

IH102
IH120

© Copyright StarMark Cabinetry FEBRUARY 2022

Block 9082 Tall Increase Depth 25"-27" NEW! I

This modification results in a tall cabinet or oven cabinet increased in depth to 25", 26" or 27" at no charge.

DESIGN CONSIDERATIONS

- Available on tall cabinets and oven cabinets only.

HOW TO ORDER

- Specify **TID25, TID26** or **TID27** in the Special Information section.
- There is no charge for this option
- Pricing P-295

TID25
TID26
TID27

Block 9085 Accessory Modification NEW! I

This modification results in a flat fee (rather than a square foot or per inch charge) for dimensional modifications on certain accessory items.

DESIGN CONSIDERATIONS

- Available on certain accessories. See accessory items for availability

HOW TO ORDER

- Specify **ACMOD** in the Special Information section.
- Pricing P-295

ACMOD

Block 9090 Extended Stiles I

This modification results in a cabinet with a stile that is wider than the standard 1½".

DESIGN CONSIDERATIONS

- Stiles can be extended to 3" wide in quarter-inch increments, with the standard extend stile modification, **ES**.
- Stiles can be extended from 3⅛" in width, up to 10½" in width with the wide extend stile modification, **E_WIDE**.
- Any addition to the stile width will increase the overall face frame dimension.
- Stiles can be fluted. See block 9140 for fluting.

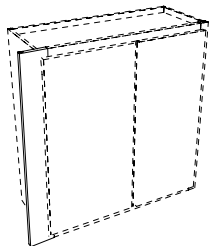

HOW TO ORDER

- For the standard extend stile, suffix the cabinet nomenclature with **EL** (extended left), **ER** (extended right) or **EB** (extended both) and the overall cabinet width in inches.
- When you calculate the overall width, note the width of the cabinet increases an amount equal to the width of the extended stile.
- For example, if you need the left stile extended 3¼", specify extend stile EL 3¼" (for an overall frame width of 33¼"). This will make the left stile 4¾", which includes the original 1½" stile.
- Add ES or E_WIDE charge to cost of cabinet
- Pricing P-295

INSTALLATION TIP

The stile is trimmable.

ES wall
ES base
ES tall
ELWWIDE wall
ERWWIDE wall
EBWWIDE wall
ELBWIDE base
ERBWIDE base
EBBWIDE base
ELTWIDE tall
ERTWIDE tall
EBTWIDE tall

Block 9100 Angled Extended Stiles I

This modification results in a cabinet with angled extended stiles.

DESIGN CONSIDERATIONS

- Stile is extended and angled back at a 45° angle.
- Stile is beveled to be secured to the cabinet next to it.
- Angled extended stiles add 3" per side to the overall width of the cabinet.

HOW TO ORDER

- Specify **_ESA** and **L** left or **R** right
- See block 9140 for fluting
- Pricing P-295

INSTALLATION TIP

The stile is trimmable

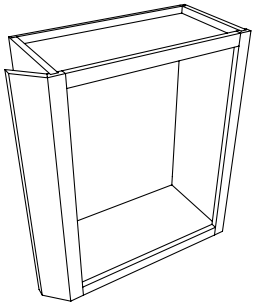

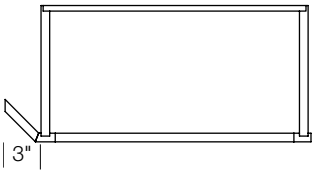

WESA wall
BESA base
TESA tall

Block 9110 Wide Stiles I

This modification results in a cabinet with a wide stile, accomplished by reducing the opening of the cabinet.

DESIGN CONSIDERATIONS

- Use wide stiles to accommodate corner clearances and moulding returns.
- By default, when you specify Wide Stiles, the stile width is increased 3", from 1½" to 4½". This decreases the opening of the cabinet 3".
- Other stile widths are available. To calculate how much a Wide Stile will decrease the cabinet opening, use this formula: Wide Stile minus 1½". For example, a 3" wide stile reduces the cabinet opening by 1½" or a 5" wide stile reduces the cabinet opening by 3½".
- Stiles can be fluted. See block 9140 for fluting.

HOW TO ORDER

- Specify **WSL** (wide stile left) or **WSR** (wide stile right) in the ES/WS column
- If you want a Wide Stile other than the default 4½" please note that in the Special Information section.
- Add **WS** charge to cost of cabinet
- Pricing P-295

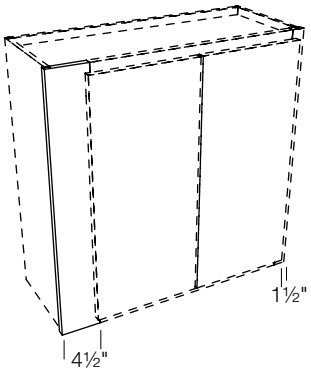

WSL wall
WSR wall
WSL base
WSR base
WSL tall
WSR tall

© Copyright StarMark Cabinetry FEBRUARY 2022

Block 9120 Clipped/Angled Stiles

DESIGN CONSIDERATIONS

- Face frame reduced in width 3" or 6", per side specified
- End panel reduced in depth 3" or 6"
- If an internal accessory mounts to the end panel, a vertical partition-VP (block 9380) must also be ordered with this option.
- May order fluting option FLUT1 (2) per side (block 9140)
- Not available if it results in an opening width less than 6" on overlay orders or 9" on Inset orders.

HOW TO ORDER

- Specify **L** or **R** Clipped Stile and **3"** or **6"**. The charge is per side.
- Add clipped stile charge per side and fluting option (if ordered) per side
- Pricing P-296

This modification results in a wall, tall, or base that has a 45 degree angled face frame stile.

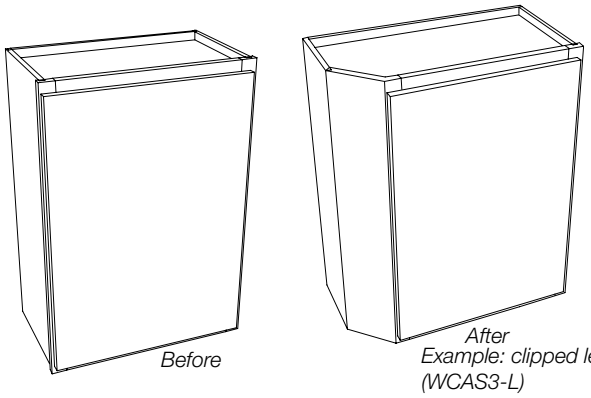

WCAS3 wall
WCAS6 wall

BCAS3 base
BCAS6 base

TCAS3 tall
TCAS6 tall

Block 9130 Chamfered Stiles

This modification results in a cabinet with chamfered stiles.

DESIGN CONSIDERATIONS

- 1½" stile receives a ¼" chamfer
- Starts and stops 2" from top and bottom edge unless otherwise specified.
- Recommend pulling or increasing depth if installed next to another cabinet.
- Recommend wide stile (block 9110) if used in overlay application.
- Not available on diagonal or angled cabinets

HOW TO ORDER

- Specify **_CHS** and **L** left, **R** right or **B** both.
- Pricing P-296

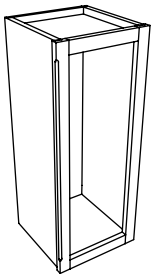

WCHS wall
BCHS base
TCHS tall

Block 9140 Fluting Treatment

This modification results in a cabinet stile or a column with fluting.

DESIGN CONSIDERATIONS

- FLUT1 is for cabinets up to 42" high
- FLUT2 is for cabinets over 42" high and no more than 96" high
- The number of "flutes" is determined by the width of the stile or column. A stile that is 3" or wider gives the best look.

HOW TO ORDER

- Fluting is available for cabinets when an extended stile (block 9090) wide stile (block 9110), or clipped/angled stiles (block 9120) is specified.
- Specify **FLUT1** or **FLUT2** for cabinets in the Special Information section. Specify **FLUT_B** for both sides.
- Specify start and stop points for flutes
- Add the FLUT charge to the cost of the cabinet
- Pricing P-296

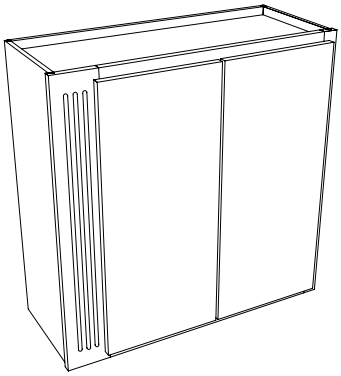

Illustration shows wide stile (block 9110) left and FLUT1.
FLUT1
FLUT2

DESIGN CONSIDERATIONS

- Use FLUT1, FLUT2, FLUT3, FLUT4 to specify sides to be fluted on Assembled Columns (block 13625). For example, a column modified with FLUT3 will have flutes on three sides.

HOW TO ORDER

- Specify **FLUT1**, **FLUT2, FLUT3 or FLUT4** for fluting on columns (block 13625) in the Special Information section
- Add the FLUT charge to the cost of the column.
- Pricing P-296

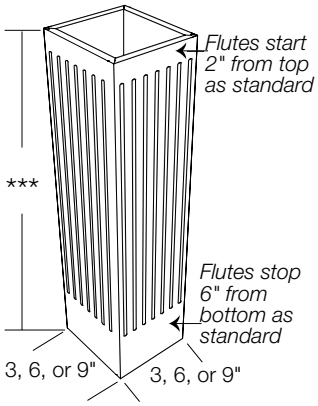

FLUT1
FLUT2
FLUT3
FLUT4

© Copyright StarMark Cabinetry FEBRUARY 2022

Block 9150 Post Chase Cutouts

This modification results in a chase cutout that can receive posts.

DESIGN CONSIDERATIONS

- Since post sizes will vary slightly, calculate the cutout space to accommodate variations in the size of the post.
- Consider WBR (block 9210) to cover back of post down to floor
- When specifying custom cutout (PCUTX), end panel must be 3" deep or greater for the depth of the post chase cutout
- See chart for Post Chase Options
- Not available if it results in an opening width less than 6" on overlay orders or 9" on Inset orders.
- Chase area is finished.
- If an internal accessory mounts to the end panel, a vertical partition VP (block 9380) must also be ordered with this option.

HOW TO ORDER

- Specify **PCUTS**, **PCUTL** or **PCUTX** in the Special Information section
- Specify dimensions C and D for PCUTX option. ✪ A drawing must be included with order.
- Specify **Left** or **Right** or **Both**
- Add PCUT charge to cost of cabinet
- Pricing P-296

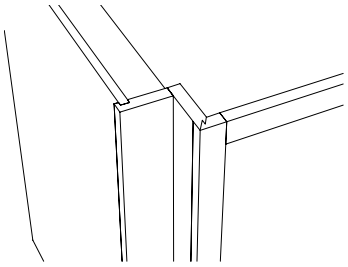

Post Chase Options
PCUTS
A. 3⅛" x 3⅛" for 3" x 3" corner posts.
PCUTL
B. 6" x 6" for 5½" large posts
PCUTX
C. and D. Custom option specified by customer for various post or half post sizes.

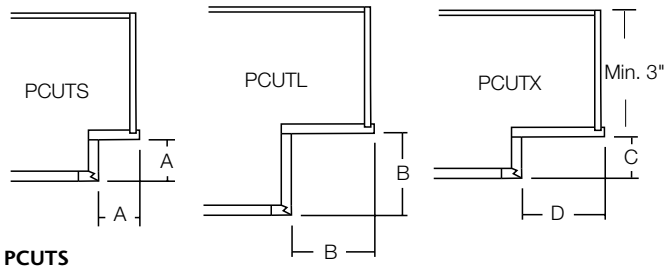

PCUTS
PCUTL
PCUTX

Block 9160 Chase Cutouts

This modification results in a cabinet that is notched to accommodate an obstruction on the job site.

DESIGN CONSIDERATIONS

- Cutout must leave 3" between frame and cutout, and end panels and cutout
- Chase area will include a back
- Cabinet will receive notched shelves if enough of the cabinet remains
- Chase area is not finished.

HOW TO ORDER

- Specify **CCUT** in the Special Information section
- Add CCUT charge to cost of the cabinet

✪ A top view drawing showing all dimensions must accompany your order

- Pricing P-296

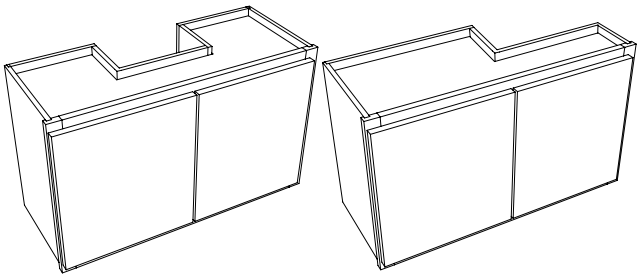

CCUT wall
CCUT base
CCUT tall

Block 9165 Paper Towel Dispenser Chase Cutouts

This modification results in a wall cabinet that is notched to accommodate a paper towel dispenser.

DESIGN CONSIDERATIONS

- Notch is 4" high and 6" deep
- Wall cabinet minimum width is 12"
- 11" wide x 4" deep paper towel dispenser, clear with brushed stainless steel accents, is included.
- Birch melamine cutout to match bottom of adjacent wall cabinets
- When concealing the cutout on the end of a run with a finished end, the cabinet must be a minimum of 15" wide.

HOW TO ORDER

- Specify **PTDCC** in the Special Information section
- Add PTDCC charge to the cost of the cabinet
- Pricing P-296

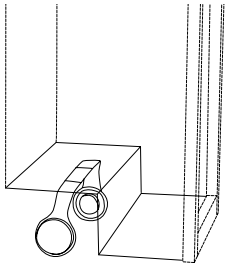

PTDCC

© Copyright StarMark Cabinetry **FEBRUARY 2022**

Block 9170 Valance Top/Bottom Rail

This modification results in a cabinet that has a decorative valance top rail or bottom rail.

DESIGN CONSIDERATIONS

- For cabinets 24" through 42" wide unless otherwise specified
- For Valance Top Rail, the minimum cabinet height is 15" unless specified otherwise.
- Valances may accept inserts, onlays or both.
- Adding a valance top rail reduces the height of the cabinet opening by the valance height minus 1½".
- Adding a valance bottom rail increases the overall height of the cabinet. This increase will be equal to the height of the valance, minus 1½ inches. For example, a VBR-EYECO on a W3630 would result in a cabinet that is 35½" high. For variances from this standard, please send a drawing ✪.
- When a valance bottom rail is added to a cabinet with finished ends, the end panels and back extend to the bottom edge of the valance. See HelpZone for an example.
- **Valance bottom rail interior side of end panels is birch melamine**
- When a cabinet is modified with a valance bottom rail, the standard reveal from the cabinet floor to the bottom of the back panel is maintained.
- Order inserts and onlays separately. They are shipped loose.

HOW TO ORDER

- For Valance Top Rail, specify **VTR** and **Style** in Special Information section.
- For Valance Bottom Rail, specify **VBR** and **Style** in Special Information section.
- Add charge to cost of cabinet
- Pricing P-297

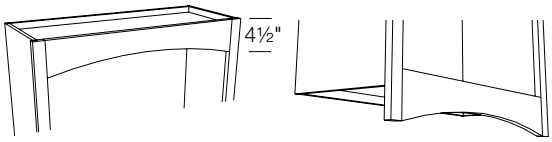

Eyebrow Top and Bottom Rail
VTR-EYE
VBR-EYE

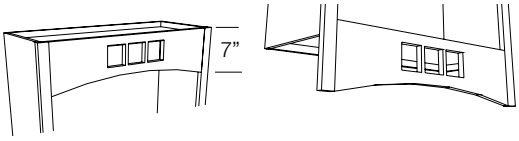

Eyebrow with Cut-Outs Top and Bottom Rail
VTR-EYECO
VBR-EYECO

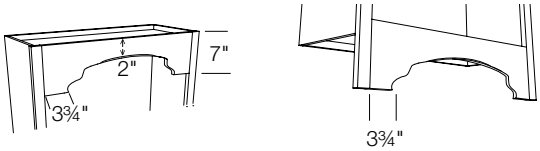

Furniture Valance with Chamfered Arch Top and Bottom Rail
VTR-AFRN
VBR-AFRN

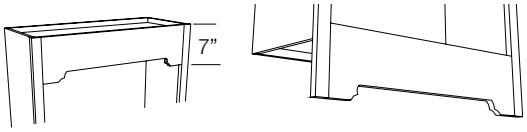

Furniture Valance with Chamfered Point Top and Bottom Rail
VTR-PFRN
VBR-PFRN

Block 9170 Valance Top/Bottom Rail continued

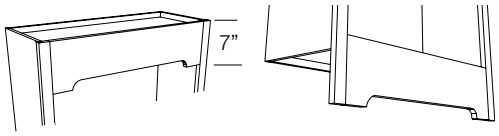

Onlay Valance Large Traditional Top and Bottom Rail
VTR-AVL
VBR-AVL

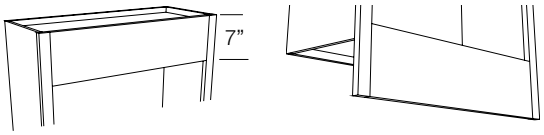

Onlay Valance Small Traditional Top and Bottom Rail
VTR-SVL
VBR-SVL

© Copyright StarMark Cabinetry **FEBRUARY 2022**

Block 9180 Onlay Attachment

This modification results in onlays factory installed on cabinet, valance or filler to allow for glaze hang-up around onlay.

DESIGN CONSIDERATIONS

- Onlays can be attached to cabinet, valance or filler/panel box face.
- Available onlays shown in blocks 13010-13220.

HOW TO ORDER

- Specify **OATCH** in the Special Information section.
- ✪ Drawing must accompany order.
- Add charge to cost of cabinet, valance or filler/panel box
- Pricing P-297

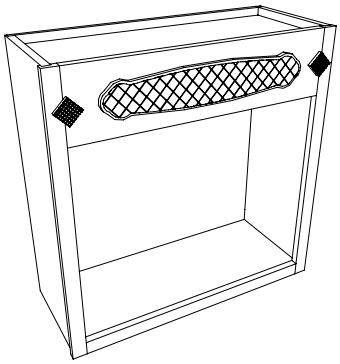

OATCH

Block 9190 Flush Bottom/Top

This modification results in a cabinet with a top or bottom that is finished veneer and is flush with the face frame.

DESIGN CONSIDERATIONS

- Wall cabinets can be ordered with finished flush plywood tops or bottoms
- Base, standard vanity and tall cabinets can be ordered with flush tops
- Wall Hung Vanities not available with a Flush Top.
- Flush Top not intended for use as a counter top.
- Edges of end panels are visible.
- Not available in Weathered.

HOW TO ORDER

- Specify **FLB** (flush bottom) or **FLT** (flush top) in the Special Information section
- Add the FL charge to the cost of the cabinet
- The FL charge is per square foot; remember to convert inches into feet
- The minimum charge is for two square feet
- Pricing P-297

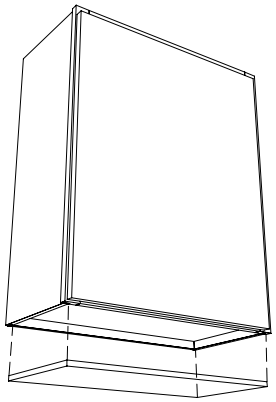

FLT
FLB

Block 9200 Wide Bottom/Top Rail-Wall Cabinets

This modification results in a wall cabinet that has a wide bottom rail or a wide top rail.

DESIGN CONSIDERATIONS

- Wall cabinets can be ordered with a 3" wide top or bottom rail
- The standard 1½" bottom or top rail is increased to 3" overall, increasing the overall height of the cabinet 1½" W2430 becomes 31½" high
- End panels will increase in overall height by 1½"
- End panels and frame stiles are extended to match the bottom or top rail

HOW TO ORDER

- Specify **WBRW** or **WTRW** in Special Information section
- Add charge to cost of cabinet
- If the wide top or bottom rail is increased greater than 3", the upcharge is doubled.
- Illustration shows Wide Bottom Rail
- Pricing P-297

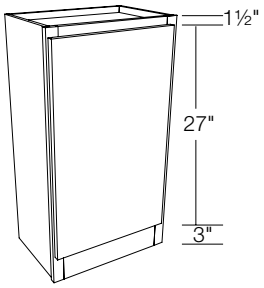

WBRW
WTRW

Block 9210 Wide Bottom Rail - Base Cabinet

This modification replaces the standard toe space with a wide bottom rail for a furniture look and for ease of attaching decorative base moulding.

DESIGN CONSIDERATIONS

- Base and utility cabinets can be ordered with a wide bottom rail instead of a recessed toe space
- Standard WBRB on a kitchen base cabinet and utility cabinet is 5½"
- Toe Kick left (TKL) and right (TKR) not available with this modification

HOW TO ORDER

- Specify **WBRB** in the Special Information section
- Add the WBRB charge to the cost of the cabinet
- Pricing P-297

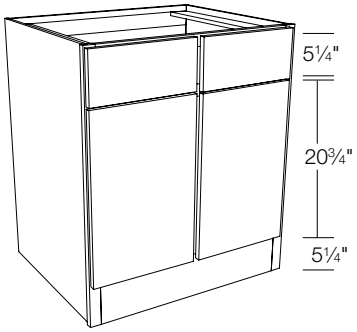

WBRB

© Copyright StarMark Cabinetry **FEBRUARY 2022**

Block 9212 Chase Cutout Drawer

DESIGN CONSIDERATIONS
- Available on 18", 21" and 24" deep cabinets
- Minimum 18" wide cabinet
- Minimum cut out of 4½" to allow for dovetailing
- Overall drawer width is ⅜" less than the frame opening
- Drawer sides are ⅝" thick

HOW TO ORDER
- Pricing per drawer or roll tray
- Pricing P-297

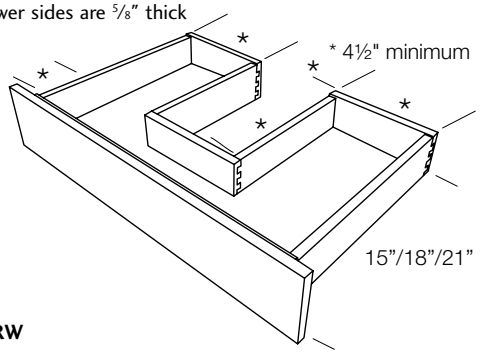

CCDRW

Block 9214 Drawer Partitions

This modification results in a drawer with fixed partitions.

DESIGN CONSIDERATIONS
- Drawer sides and partitions are ⅝" thick solid wood
- Overall drawer width is ⅜" less than the frame opening
- Drawer partitions are fixed

HOW TO ORDER
- Send drawing with position of drawer partitions
- Pricing per partition
- Pricing P-297

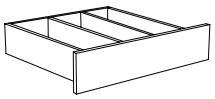

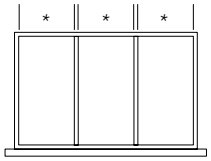

DWPAR

Block 9215 Toe Kick Drawer

This modification results in a cabinet with a drawer in place of the standard toe kick or wide bottom rail.

DESIGN CONSIDERATIONS
- Solid front drawer fronts only
- Installed in standard toe or wide bottom rail.
- Uses 2" high drawer
- 96" high cabinets receive a loose toe kick drawer, unless otherwise specified.
- Minimum cabinet depth is 13½"

HOW TO ORDER
- Order cabinet then on separate line specify BTKDW.
- Drawer will be full width unless specified.
- Pricing P-298

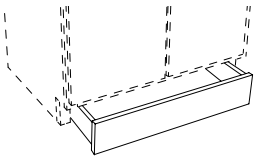

BTKDW

Block 9216 Walnut Drawer Box

This modification replaces all of the standard drawers and roll trays on the cabinetry order with walnut.

DESIGN CONSIDERATIONS
- Applies to the entire order
- 5/8" solid walnut

HOW TO ORDER
- Check the box on the first page of the Cabinetry Order Form
- Pricing per drawer or roll tray
- Pricing P-298

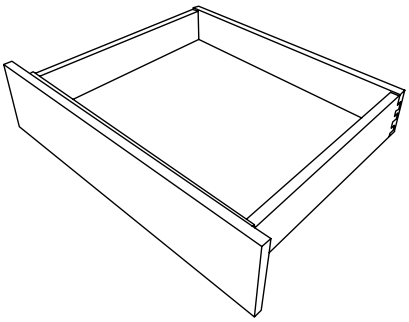

WLTDRW

Block 9220 Toe Treatment

This modification replaces the standard toe space with a decorative toe treatment on the plane of the face frame.

DESIGN CONSIDERATIONS
- Available for all cabinets with a toe, 12" through 84" wide
- Toe treatment acts as a wide bottom rail
- Toe notch and sub toe is removed on bases
- Toe Kick left (TKL) and right (TKR) not available with this modification
- Arched Chamfered SKTC toe treatment not recommended on cabinets below 21" in width
- There is no chamfer on SKTB and SKTC toe treatments on 18" and 21" wide cabinets

HOW TO ORDER
- Specify **TT-SKT___** in the Special Information section
- Add the TT-SKT charge to the cost of the cabinet
- Pricing P-298

TT-SKTA Traditional

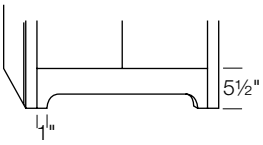

TT-SKTE Eyebrow

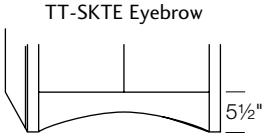

TT-SKTB Pointed Chamfered

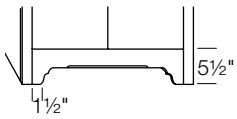

TT-SKTC Arched Chamfered

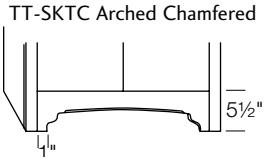

TT-SKTA
TT-SKTE
TT-SKTB
TT-SKTC

© Copyright StarMark Cabinetry FEBRUARY 2022

Block 9230 Toe Space – Wall Cabinets

This modification results in a wall cabinet that has 4" of toe kick space added. The height of the cabinet increases 4".

DESIGN CONSIDERATIONS
- Wall cabinets can be ordered with recessed toe space in front
- Overall height of cabinet will increase by 4"
- See block 9250 for toe kicks on the sides of a cabinet

HOW TO ORDER
- Specify **WTOE** in the Special Information section
- Add the WTOE charge to the cost of the cabinet
- Pricing P-298

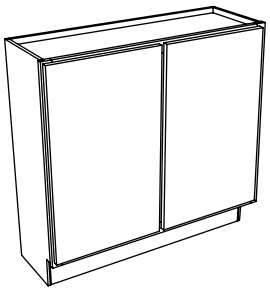

WTOE

Block 9236 Legs Loose

This modification results in a Spa Vanity or island shipped in pieces—cabinet, leg assemblies or legs and plinth shelf (if applicable)—for final assembly on the jobsite.

DESIGN CONSIDERATIONS
- Cabinet, legs assemblies or legs are not crated
- Spa Vanity with plinth shelf shipped in four pieces
- Spa Vanity without plinth shelf shipped in three pieces
- Island with plinth shelf shipped in six pieces

HOW TO ORDER
- Specify **LLOSE** in the Special Information column on the order form.
- Pricing P-298

LLOSE

Block 9240 Omit Toe Kick

This modification results in a cabinet without a toe kick. Works well with vanity platform (block 8195).

DESIGN CONSIDERATIONS
- Cabinet is built without toe kick notch
- For designing with Vanity Platform (block 8195)
- Cabinet is reduced in height by 4". For example, 31½" cabinet is reduced to 27½" in height, 34½" cabinet is reduced to 30½" in height.

HOW TO ORDER
- Specify **OMTOE** in the Special Information section.
- There is no charge for this option.
- Pricing P-298

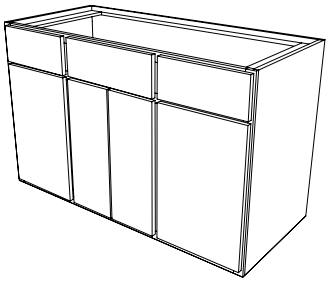

OMTOE

Block 9241 Loose Toe Option

NEW!

This modification results in a loose toe kick that is shipped with the cabinet.

DESIGN CONSIDERATIONS
- Cabinet is built without toe kick notch
- Loose toe kick is shipped with the cabinet
- Standard toe kick sizing
- Not available with wide bottom rail

HOW TO ORDER
- Specify **LSTOE** in the Special Information column on the order form.
- There is no charge for this option
- Pricing P-298

LSTOE

Block 9250 Toe Space - Base Cabinets

This modification results in a cabinet with a toe space on either side or on the back.

DESIGN CONSIDERATIONS
- Base, tall and wall cabinets can be ordered with recessed toe space on cabinet ends or back
- TKL and TKR not available with Wide Bottom Rail on front of cabinet.
- It is not necessary to specify TKL/TKR on a cabinet with a loose toe kick.

HOW TO ORDER
- Specify **TKL** (toe kick left), **TKR** (toe kick right) or **TKB** (toe kick back) in the Special Information section
- Add the TK charge to the cost of the cabinet
- Pricing P-298

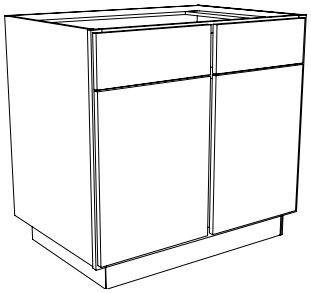

TKL left
TKR right
TKB back

Block 9260 Base Extend Side and Stile Down

This modification results in a cabinet that has lengthened stiles for ease of attaching furniture skirts.

DESIGN CONSIDERATIONS
- Toe notch is removed
- Sub toe remains
- This modification can be applied to both sides, or just one side
- Refer to Blocks 13650-70 for skirts
- Inside of end panel is unfinished.

HOW TO ORDER
- This modification is priced per side
- Specify **BESSDL** (left), **BESSDR** (right) or **BESSDB** (both) in Special Information section
- Illustration shows left
- Add BESSD charge(s) to cost of cabinet
- Pricing P-298

NOTES/CAUTION
- BESSD frame stile is 1¼" wide when specified with beaded inset.

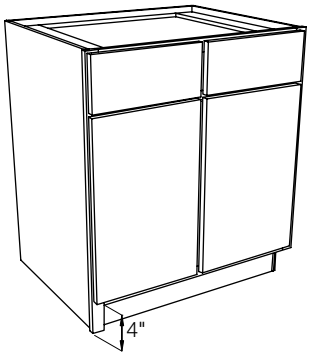

BESSDL
BESSDR

© Copyright StarMark Cabinetry FEBRUARY 2022

Block 9270 Side Extended Back

This modification results in a wall, tall, or base that has an end panel extended beyond the back of the cabinet.

DESIGN CONSIDERATIONS

- Can be extended in ½" increments, up to 12" beyond the cabinet back
- Not available on corner cabinets
- When specifying a Fixed FFD or IMDP, a ½" interior panel is added. The total thickness of the extended side back increases to 1¼". The ⅞" notch accommodates a back panel butted into the stile.

HOW TO ORDER

- Specify **L** or **R** Side Extended Back and the dimension.
- Illustration shows left.
- Add Side Extended Back charge per side. Use the standard charge for extension up to 6". For extension up to 12", double the standard charge.
- Pricing P-298

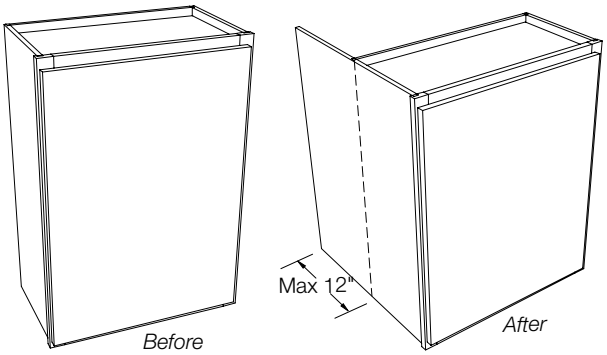

WSEB wall
BSEB base
TSEB tall

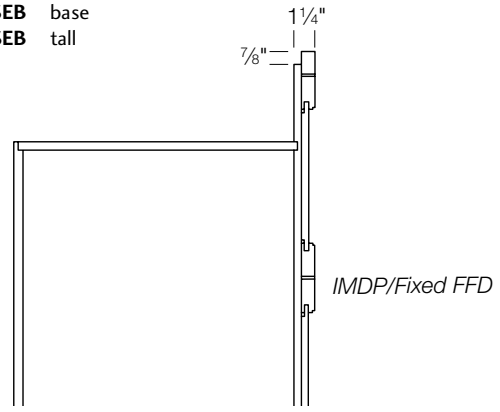

Block 9280 Peninsula Cabinets

This modification results in a cabinet that has a face frame and door(s) on the front and on the back.

DESIGN CONSIDERATIONS

- Except where accessories or configurations will not permit, most cabinets can be ordered with face frames and door on the front and back of the cabinet
- Drawer header is false on peninsula side

HOW TO ORDER

- Prefix the cabinet nomenclature with a **P**
- Add 75% to the cabinet price
- For both doors, specify **L** or **R** hinging
- Pricing P-298

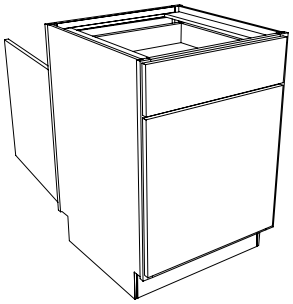

P

Block 9290 Angled Cabinets

This modification results in a cabinet built with an angle on the front or side.

DESIGN CONSIDERATIONS

- Cabinets are available with
  1) Angled Front. See Illustration A.
  2) Angled Side. See Illustration B.
  3) Angled Side with FF&D. See Illustration C.
- For other variations, call Technical Assistance at 800.551.3404.
- Cabinets that require frame components to be cut at an angle greater than 45 degrees will not be accepted for production.

HOW TO ORDER

- Angled cabinets not covered in the price list, including Angled Side with FF&D, must be quoted through Technical Assistance before they are ordered
- ✪ A top view drawing showing all dimensions must accompany your order
- In the Cabinet Number section, specify the **cabinet** you are modifying. Please note that the width of cabinet that you start with must match the dimension you note in the top view drawing. This dimension is indicated in the illustrations below with an asterisk.
- Specify the **angle modification** (**AS** or **AF**) in the Special Information section
- Add the upcharge to the cost of the cabinet
- Pricing P-299

Illustration A

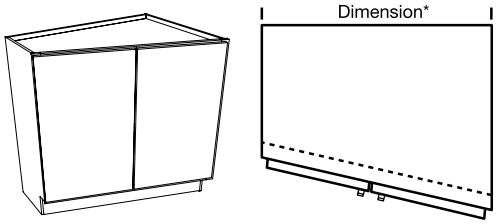

Illustration B

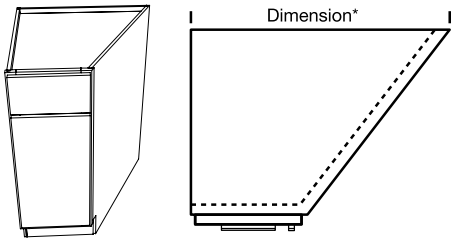

Illustration C

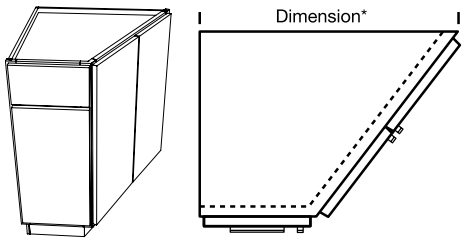

AF
AS
AS/FFD

© Copyright StarMark Cabinetry FEBRUARY 2022

Block 9300 Stacked Cabinets

This modification results in multiple cabinets stacked vertically to create one unit, creating a seamless end panel.

DESIGN CONSIDERATIONS

- Wall cabinets can be stacked up to 120" in height, as long as the width is 48" or less.
- Doors may not align with cabinets stacked at jobsite.

HOW TO ORDER

- Specify **SC** in the Special Information section of the cabinets you are "stacking"
- Add the SC charge to the basic cost of each cabinet
- ✪ A drawing must accompany your order
- Pricing P-299

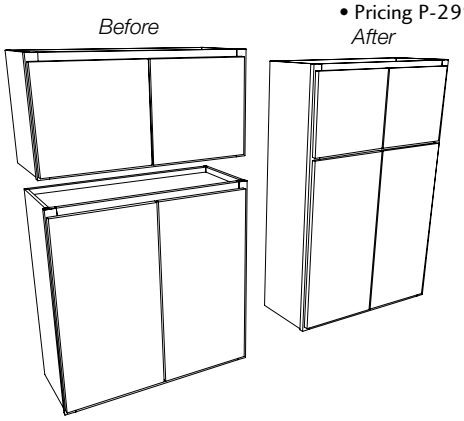

SC per cabinet

Block 9310 Combining Cabinets

This modification results in multiple cabinets combined horizontally to create one unit.

DESIGN CONSIDERATIONS

- Wall, vanity or base cabinets can be combined up to 84" in width, as long as the height is 48" or less.
- Utility cabinets can be combined up to 36" in width.
- Cabinets must be the same height and depth to be combined at the factory
- Factory will build door openings according to cabinets chosen to combine
- Partitions are required for shelves in cabinets that will be over 48" wide when combined
- To receive partitions in cabinets under 48" wide, please specify when ordering
- Partitions are ¾" thick

HOW TO ORDER

- Specify **COMBCAB** in the Special Information section of the cabinets you are combining
- Add the COMBCAB charge to the basic cost of each cabinet
- ✪ A drawing must accompany your order
- Specify necessary partitions (block 9380) as a separate line item
- Pricing P-299

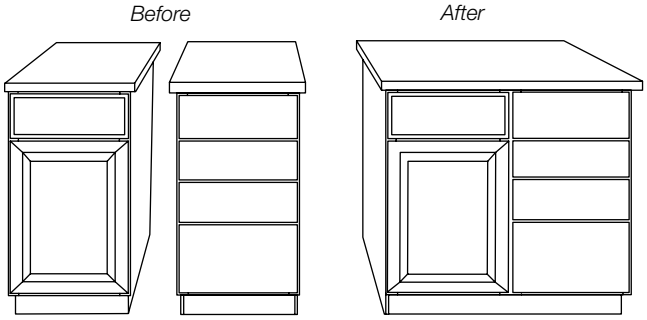

COMBCAB

Block 9320 Add Door

This modification results in a wall, tall, or base that has an added door.

DESIGN CONSIDERATIONS

- If you are adding doors on top of each other, this modification can be combined with Add Rail and Floor (block 9340) to create separate storage areas on a cabinet

HOW TO ORDER

- Specify **__ADDR** in the Special Information section
- Add the Add Door charge to the cabinet
- ✪ Send drawing and specify door hinging and opening size.
- Pricing P-299

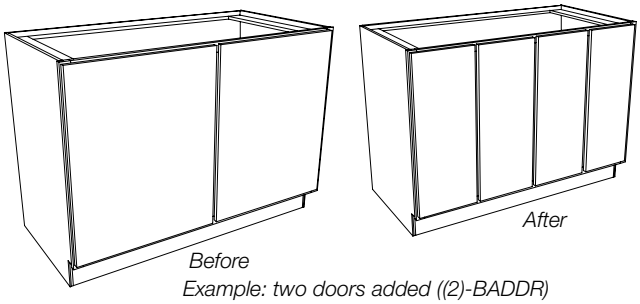

Example: two doors added ((2)-BADDR)

WADDR wall

BADDR base

TADDR tall

Block 9330 Add Drawer

This modification results in a wall, tall, or base that has an added drawer.

DESIGN CONSIDERATIONS

- This modification includes the added frame rail.

HOW TO ORDER

- Specify **__ADDW** in the Special Information section
- Add the Add Drawer charge to the cabinet
- ✪ Send drawing and specify drawer opening height
- Pricing P-299

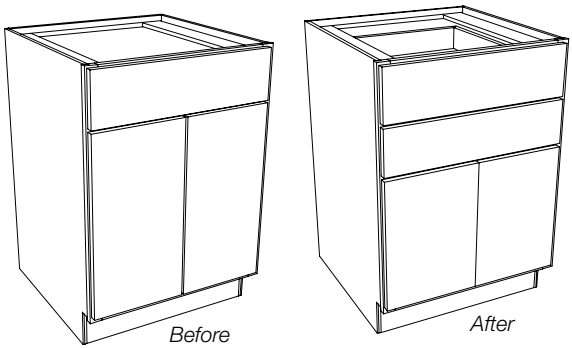

Example: one drawer added (BADDW)

WADDW wall

BADDW base

TADDW tall

© Copyright StarMark Cabinetry FEBRUARY 2022

Block 9340 Add Rail and Floor

This modification results in a wall, tall, or base that has additional openings to accommodate special storage needs.

DESIGN CONSIDERATIONS

- This modification does not include additional doors. See Add Door Modification (block 9320)

HOW TO ORDER

- Specify **__ARAF** in the Special Information section
- Add the Add Rail and Floor charge to the cabinet
- ✪ Send drawing
- Pricing P-299

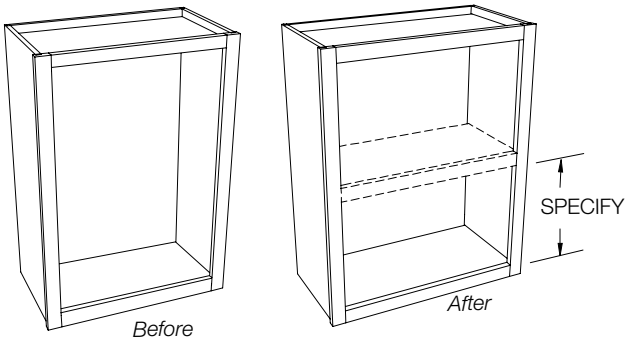

WARAF wall

BARAF base

TARAF tall

Block 9350 Relocate Rail and Floor

This modification results in a wall, tall, or base that has modified door openings to accommodate special storage needs.

DESIGN CONSIDERATIONS

- This modification does not include additional doors. See Add Door Modification (block 9320)
- Minimum door opening height 9", maximum door opening height 58½"

HOW TO ORDER

- Specify **__RRAF** in the Special Information section
- Add the Relocate Rail and Floor charge to the cabinet
- ✪ Send drawing
- Pricing P-299

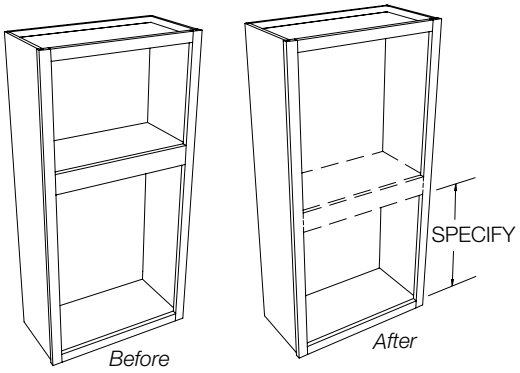

WRRAF wall

BRRAF base

TRRAF tall

Block 9360 Relocate Rail

This modification results in a wall, tall, or base that has modified drawer openings to accommodate special storage needs.

DESIGN CONSIDERATIONS

- This modification does not include additional drawers. See Add Drawer Modification (block 9330)
- Minimum drawer opening height 3", maximum opening height 12¾"
- 3" drawer opening height will have slab header on all door styles.

HOW TO ORDER

- Specify **__RAIL** in the Special Information section
- Add the Relocate Rail charge to the cabinet
- ✪ Send drawing
- Pricing P-299

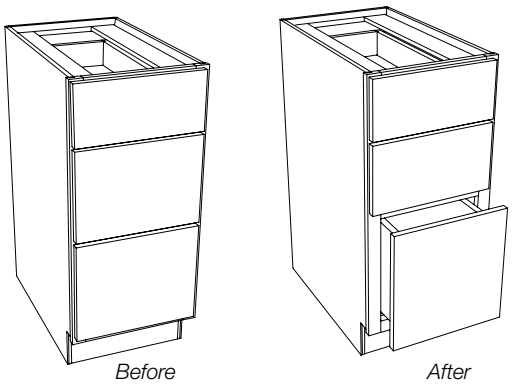

WRAIL wall

BRAIL base

TRAIL tall

Block 9370 Inverted Frames

This modification results in a cabinet with an inverted face frame.

DESIGN CONSIDERATIONS

- Any cabinet can receive an inverted frame
- Design with an inverted frame when your client wants, for example, the bottom door on a utility cabinet to align with the door height of the base cabinets

HOW TO ORDER

- Specify **IF** in the Special Information section
- Add the IF charge to the cost of the cabinet
- Pricing P-300

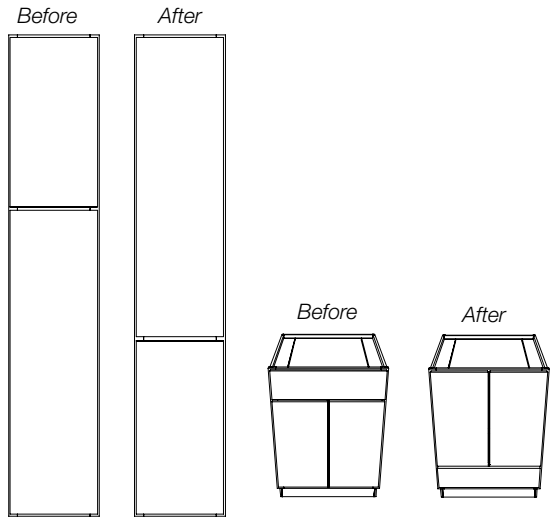

IF

© Copyright StarMark Cabinetry FEBRUARY 2022

Block 9380 Vertical Partitions

This modification results in a partition(s) built inside the cabinet to accomplish specialized storage needs.

DESIGN CONSIDERATIONS

- Partitions are ¾" thick
- Partitions are factory installed

HOW TO ORDER

- Specify position of partition
- ✪ Send drawing to show position of shelves
- Pricing P-300

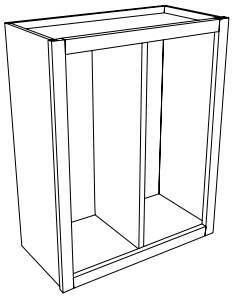

WVP wall

BVP base

UVP utility

© Copyright StarMark Cabinetry **FEBRUARY 2022**

Block 9390 Wine Cubes

This modification results in wine cubes being added to a wall, tall or base cabinet.

DESIGN CONSIDERATIONS

- The height of the modified cabinet remains the same height. The door shortens in relation to the cubes added.
- The size of the cube openings are determined by the overall cabinet size, so from cabinet to cabinet, the opening sizes will range from 4" to 4¾".
- Entire cabinet will receive a finished veneer interior
- On the same cabinet, to create the best overall appearance, the openings in the outermost columns may be slightly different than other openings on that cabinet.
- Cube opening sizes cannot be modified.

HOW TO ORDER

- Use the chart at right to determine which modification to use, based on the width of the cabinet you are modifying.

✪ Send in drawing for clarification.

- Pricing P-300

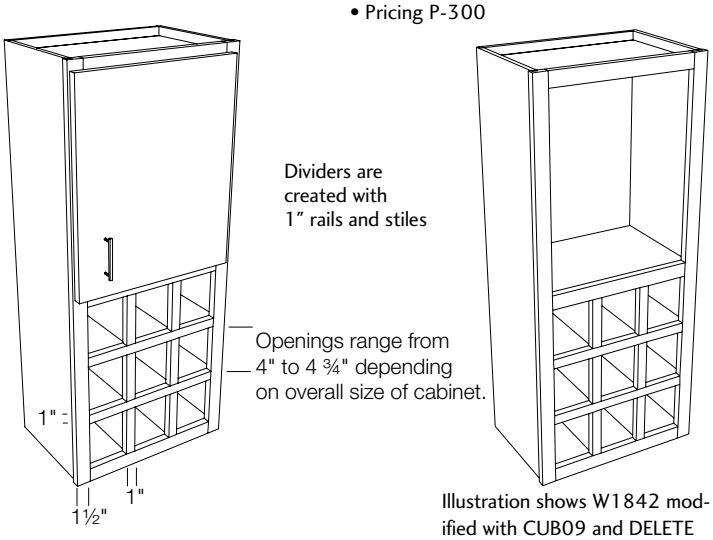

Illustration shows W1842 modified with CUB09 and DELETE DOORS (block 9710)

Illustration shows W1842 modified with CUB09

CUB02
CUB03
CUB04
CUB05
CUB06
CUB07
CUB08
CUB09
CUB10
CUB12
CUB14
CUB15
CUB16
CUB18
CUB20
CUB21
CUB24
CUB25
CUB27
CUB28
CUB30
CUB35
CUB36
CUB42
CUB45
CUB54

Block 9390 Wine Cubes continued

Cabinet Width	CUB Options	No. of Cubes	Arrangement
12	CUB02	2	1 row of 2
	CUB04	4	2 rows of 2
	CUB06	6	3 rows of 2
	CUB08	8	4 rows of 2
	CUB10	10	5 rows of 2
	CUB12	12	6 rows of 2
	CUB14	14	7 rows of 2
	CUB18	18	9 rows of 2
18	CUB03	3	1 row of 3
	CUB06	6	2 rows of 3
	CUB09	9	3 rows of 3
	CUB12	12	4 rows of 3
	CUB15	15	5 rows of 3
	CUB18	18	6 rows of 3
	CUB21	21	7 rows of 3
	CUB27	27	9 rows of 3
24	CUB04	4	1 row of 4
	CUB08	8	2 rows of 4
	CUB12	12	3 rows of 4
	CUB16	16	4 rows of 4
	CUB20	20	5 rows of 4
	CUB24	24	6 rows of 4
	CUB28	28	7 rows of 4
	CUB36	36	9 rows of 4
30	CUB05	5	1 row of 5
	CUB10	10	2 rows of 5
	CUB15	15	3 rows of 5
	CUB20	20	4 rows of 5
	CUB25	25	5 rows of 5
	CUB30	30	6 rows of 5
	CUB35	35	7 rows of 5
	CUB45	45	9 rows of 5
36	CUB06	6	1 row of 6
	CUB12	12	2 rows of 6
	CUB18	18	3 rows of 6
	CUB24	24	4 rows of 6
	CUB30	30	5 rows of 6
	CUB36	36	6 rows of 6
	CUB42	42	7 rows of 6
	CUB54	54	9 rows of 6
42	CUB07	7	1 row of 7
	CUB14	14	2 rows of 7
	CUB21	21	3 rows of 7
	CUB28	28	4 rows of 7
	CUB35	35	5 rows of 7
	CUB42	42	6 rows of 7
48	CUB09	9	1 row of 9
	CUB18	18	2 rows of 9
	CUB27	27	3 rows of 9
	CUB36	36	4 rows of 9
	CUB45	45	5 rows of 9
	CUB54	54	6 rows of 9

© Copyright StarMark Cabinetry FEBRUARY 2022

Block 9400 Beaded Back

This modification replaces the standard back with a beaded panel.

DESIGN CONSIDERATIONS

- ⅜" thick beaded panel
- To order beaded panel in an accent color, see block 9401.
- To match the panel to the interior, specify a finished veneer interior
- Panel for tinted varnish finish will be MDF
- Veneer panels will have an MDF core

HOW TO ORDER

- Specify **BBACK** in the Special Information section
- Specify **STIN** in the Special Information section
- Specify **Width** x **Height**
- This item is priced per square foot
- Determine the square footage of the panel, remembering to convert inches into feet
- Add the square foot charge to the cost of the panel
- Pricing P-300

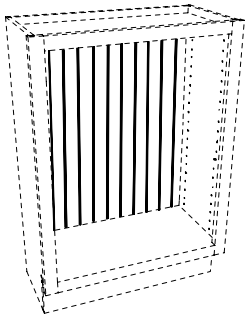

BBACK

Block 9401 Two-Tone Back

This modification results in a cabinet with a back panel in an accent color.

DESIGN CONSIDERATIONS

- BBKAT is a beaded back panel in an accent color.
- BCKAT is a standard back panel in an accent color.

HOW TO ORDER

- Specify **BBKAT** or **BCKAT** and accent color in the Special Information section
- Add Beaded Back upcharge (See Block 9400) to BBKAT upcharge. Add both upcharges to the cost of the cabinet.
- Add BBKAT upcharge to the cost of the cabinet.
- Pricing P-300

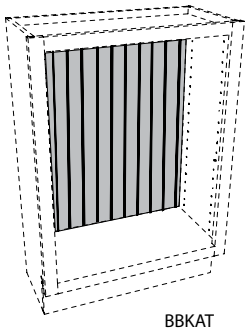

BBKAT

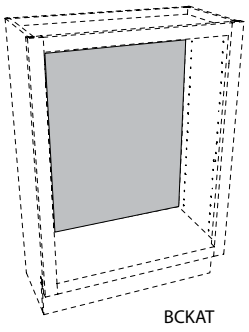

BCKAT

BBKAT beaded back
BCKAT standard back

Block 9410 Finished Back

This modification replaces a cabinet's standard back panel with ¾" plywood that has been finished.

DESIGN CONSIDERATIONS

- Available for wall, base and tall cabinets no more than 48" wide.
- Not available for corner cabinets
- Use this modification when a cabinet back will be visible, such as peninsula and island applications.
- Cabinet remains at same depth.
- Not available in Weathered.

HOW TO ORDER

- Specify **__FBAC** in the Special Information column
- Add the __FBAC charge to the cost of the cabinet
- Pricing P-300

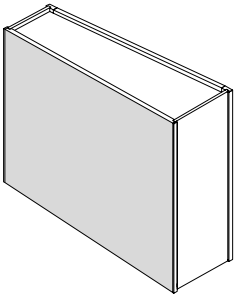

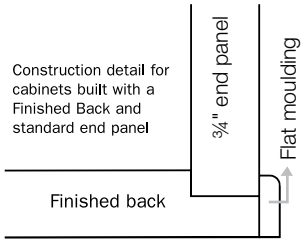

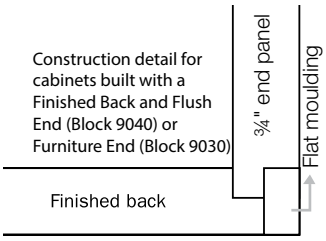

WFBAC wall
BFBAC base
TFBAC tall

Block 9420 Finished Paneled Back

This modification replaces a cabinet's standard back panel with Authentic Desk Island Panel (wainscot).

DESIGN CONSIDERATIONS

- Framing will match door stiles and rails
- Bottom rail is 7"
- Available in all door styles except arched, mitered and Slab.
- False back is added to cover the inside of the panel. Inside dimension is reduced to 21¾"
- Cabinet depth remains the same

HOW TO ORDER

- Specify **__FPBC** in the Special Information column
- Add the __FPBC charge to the cost of the cabinet
- Pricing P-300

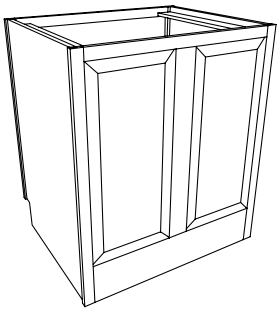

WFPBC wall
BFPBC base
TFPBC tall

© Copyright StarMark Cabinetry FEBRUARY 2022

Block 9430 Panel Void

This modification results in a cabinet that has a ¼" plywood panel installed over the void area. Use to keep items secure within the cabinet and when void area will NOT be exposed after installation.

DESIGN CONSIDERATIONS

- Square wall and blind corner base cabinets can be ordered with ¼" plywood panels installed from the inside over the void

HOW TO ORDER

- Specify **WPLV** (wall panel void) or **BPLV** (base panel void) in the Special Information section
- Add the charge to the cost of the cabinet
- Pricing P-300

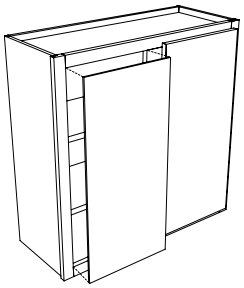

WPLV wall

BPLV base

Block 9440 Flush Void

This modification results in solid wood inserted in the void area of a blind corner cabinet. Use when a void area will be visible after installation.

DESIGN CONSIDERATIONS

- Square wall and blind corner base cabinets can be ordered with void area filled with solid wood

HOW TO ORDER

- Specify **WFLV** (wall flush void) or **BFLV** (base flush void) in the Special Information section
- Add the FLV charge to the cost of the cabinet
- Pricing P-301

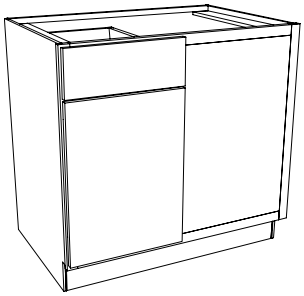

WFLV wall

BFLV base

Block 9460 Full Shelves

This modification replaces the standard depth shelves with shelves that are full depth.

FS

DESIGN CONSIDERATIONS

- This modification is available for base cabinets with standard shelves.

HOW TO ORDER

- Specify **FS** in the Special Information section
- Add the FS charge to the cost of the cabinet
- Pricing P-301

Block 9470 Maple Natural Veneer Interior

This modification results in a wall, tall or base cabinet that has a maple natural veneer interior.

DESIGN CONSIDERATIONS

- The entire interior of the cabinet—top, bottom, shelves, end panels, back panel and drawer bottoms—will be maple natural veneer
- Tops and bottoms of wall cabinets will have a maple natural veneer on the interior and exterior of the cabinet
- A finished veneer interior cabinet (STIN Block 9480) with a _PVIN modification will result in a finished veneer interior; the tops and bottoms will have a finished interior and maple natural veneer on the exterior.

HOW TO ORDER

- Specify **_PVIN** in the Special Information section
- Add **_PVIN** charge to the cost of the cabinet
- Pricing P-301

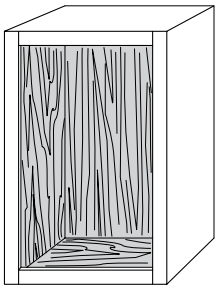

WPVIN wall

BPVIN base

TPVIN tall

© Copyright StarMark Cabinetry **FEBRUARY 2022**

Block 9480 Finished Veneer Interior

This modification replaces the standard melamine interior material with finished veneer plywood.

DESIGN CONSIDERATIONS

- Cabinet interior will receive finished veneer plywood

HOW TO ORDER

- Specify **STIN** in the Special Information section
- Add the STIN charge to the cost of the cabinet
- Pricing P-301

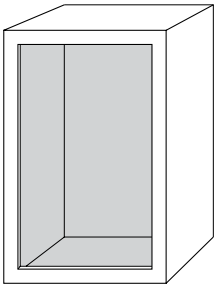

STIN per door

Block 9500 Insert Doors

This modification results in a wood frame door that can receive a decorative insert.

DESIGN CONSIDERATIONS

- Cabinet will receive a finished veneer interior
- ID doors for Laguna and Lancaster door styles have twin openings when door is equal to or greater than 14½" wide
- Mortise and tenon doors greater than 42" high will have a center rail.
- Retainer clips are included
- We do not recommend Insert doors on any door modified to 1⅞" stiles on square corner wall cabinets. The hinge is visible through the opening.

HOW TO ORDER

- Specify **ID** in the Special Information section
- Add ID charge to cost of cabinet
- When specifying this modification in 2020, we will use a suffix of .B (Bottom and Base doors), .M (Middle doors) and .T (Top and Wall doors) to indicate correct placement of glass/inserts/mullion doors on a cabinet.
- Pricing P-301

Laguna/Lancaster

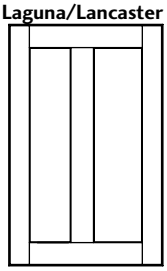

Twin center panels are removed

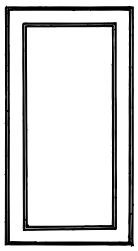

Center Panel is removed

ID

Block 9510 Aluminum Frame Insert Doors

This modification results in an aluminum frame door with satin glass insert.

DESIGN CONSIDERATIONS

- Cabinet will receive a finished veneer interior
- Door is 13⁄16" thick with 2⅛" stiles and rails and mitered joints
- Satin glass included with door
- Available on cabinets 12"-48" high
- If using on tip-up doors, use the height charge for the width of the tip-up cabinet

HOW TO ORDER

- There is an extended lead time for Aluminum Frame Insert Doors. See your Cycle Ship for more information.
- When specifying this modification in 2020, we will use a suffix of .B (Bottom and Base doors), .M (Middle doors) and .T (Top and Wall doors) to indicate correct placement of glass/inserts/mullion doors on a cabinet.
- Pricing P-301

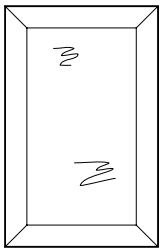

IDA24
IDA30
IDA36
IDA42
IDA48

Block 9512 Oil Rubbed Bronze Frame Insert Doors

This modification results in an oil rubbed bronze frame door with satin glass insert.

DESIGN CONSIDERATIONS

- Cabinet will receive a finished veneer interior
- Door is 13⁄16" thick with 2⅛" stiles and rails and mitered joints
- Satin glass included with door
- Available on cabinets 12"-48" high
- If using on tip-up doors, use the height charge for the width of the tip-up cabinet

HOW TO ORDER

- There is an extended lead time for Oil Rubbed Bronze Frame Insert Doors. See your Cycle Ship for more information.
- When specifying this modification in 2020, we will use a suffix of .B (Bottom and Base doors), .M (Middle doors) and .T (Top and Wall doors) to indicate correct placement of glass/inserts/mullion doors on a cabinet.
- Pricing P-301

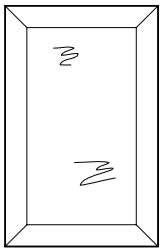

IDB24
IDB30
IDB36
IDB42
IDB48

© Copyright StarMark Cabinetry **FEBRUARY 2022**

Block 9520 Thornton Insert Door

This modification results in a two-panel wood frame door that can receive an insert in the door's upper opening.

DESIGN CONSIDERATIONS

- Cabinet will receive a finished veneer interior
- Available for cabinets that are 30" high or taller but recommended for cabinets that are at least 36" high.
- Not available in mitered or slab doors. Arch door styles will be square.
- Upper opening accepts ¼" thick material
- Retainer clips are included

HOW TO ORDER

- Specify **THOR ID** in the Special Information section
- Add THOR ID charge to cost of cabinet
- To order decorative insert (block 9590, 9592, 9594, 9596), add the insert charge to the THOR ID charge. Specify the insert on a separate line.
- When specifying this modification in 2020, we will use a suffix of .B (Bottom and Base doors), .M (Middle doors) and .T (Top and Wall doors) to indicate correct placement of glass/inserts/mullion doors on a cabinet.
- Pricing P-301

Raised Panel

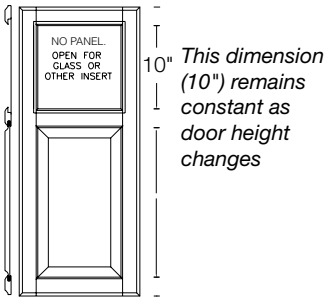

Flat Panel

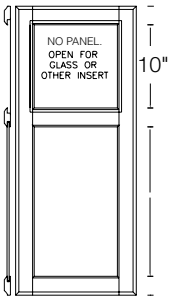

THOR ID

Block 9521 Thornton Three Lite Mullion Door

This modification results in a two-panel wood frame door that can receive an insert in the door's upper opening.

DESIGN CONSIDERATIONS

- Three equally sized lites
- Cabinet will receive a finished veneer interior
- Available for cabinets that are 30" high or taller but recommended for cabinets that are at least 36" high.
- Not available in mitered or slab doors. Arch door styles will be square.
- Upper opening accepts ¼" thick material
- Retainer clips are included

HOW TO ORDER

- Specify **TH3LT** in the Special Information section
- Add TH3LT charge to cost of cabinet
- To order decorative insert (block 9590, 9592, 9594, 9596), add the insert charge to the TH3LT charge. Specify the insert on a separate line.
- When specifying this modification in 2020, we will use a suffix of .B (Bottom and Base doors), .M (Middle doors) and .T (Top and Wall doors) to indicate correct placement of glass/inserts/mullion doors on a cabinet.
- Pricing P-301

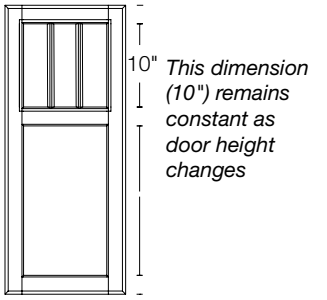

TH3LT

Block 9522 Thornton Four Lite Mullion Door

This modification results in a two-panel wood frame door that can receive an insert in the door's upper opening.

DESIGN CONSIDERATIONS

- Four equally sized lites
- Cabinet will receive a finished veneer interior
- Available for cabinets that are 30" high or taller but recommended for cabinets that are at least 36" high.
- Not available in mitered or slab doors. Arch door styles will be square.
- Upper opening accepts ¼" thick material
- Retainer clips are included

HOW TO ORDER

- Specify **TH4LT** in the Special Information section
- Add TH4LT charge to cost of cabinet
- To order decorative insert (block 9590, 9592, 9594, 9596), add the insert charge to the TH4LT charge. Specify the insert on a separate line.
- When specifying this modification in 2020, we will use a suffix of .B (Bottom and Base doors), .M (Middle doors) and .T (Top and Wall doors) to indicate correct placement of glass/inserts/mullion doors on a cabinet.
- Pricing P-301

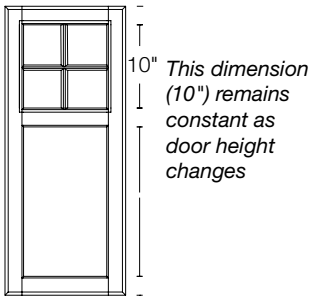

TH4LT

Block 9523 Thornton X Insert Door

NEW!

This modification results in a two-panel wood frame door that can receive an insert in the door's upper opening.

DESIGN CONSIDERATIONS

- X in upper opening
- Cabinet will receive a finished veneer interior
- Available for cabinets that are 30" high or taller but recommended for cabinets that are at least 36" high.
- Not available in mitered or slab doors. Arch door styles will be square.
- Upper opening accepts ¼" thick material
- Retainer clips are included

HOW TO ORDER

- Specify **THMCR** in the Special Information section
- Add THMCR charge to cost of cabinet
- To order decorative insert (block 9590, 9592, 9594, 9596), add the insert charge to the THMCR charge. Specify the insert on a separate line.
- When specifying this modification in 2020, we will use a suffix of .B (Bottom and Base doors), .M (Middle doors) and .T (Top and Wall doors) to indicate correct placement of glass/inserts/mullion doors on a cabinet.
- Pricing P-301

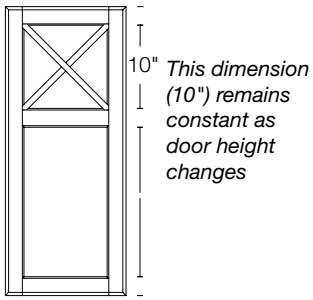

THMCR

© Copyright StarMark Cabinetry FEBRUARY 2022

Block 9525 Quarter Moon Insert Door

This modification results in a quarter moon wood frame insert door that can receive a glass insert.

DESIGN CONSIDERATIONS

- Wood retainer frame is included
- Glass insert is not included
- Cabinet will receive a finished veneer interior
- Available on Accord, Aero, Avendale, Bedford, Bonita, Breckenridge, Bridgeport, Chesapeake, Clifton, Coralville, Cosmopolitan, Farmington, Fullerton, Hampton, Hanover, Harbor, Harrison, Hudson, Huntingford, Laguna, Lancaster, Lehigh, Manhattan, Medina, Melbourne, Milan, Monroe, Oakley, Orian, Osprey, Overland, Renwick, Richland, Ridgeville, Roanoke, Roseville, Salem, Stockton, Stratford, Taft, Tempo, Tipton, Tucson, Tudor, Waterfall, Waynesville and Westerly door styles
- Available on Alexandria, Allentown, Amsdahl, Charlotte, Danburg, DeWitt, Fairhaven, Gillette, Knottingham, Lafayette, Lafontaine, Laforest, Mackay, Merrimac, Montico, Rocheport, Rock Elm and Winterhaven inset door styles
- Allentown, Amsdahl, Avendale, Harbor, Huntingford, Oakley, Orian, Osprey and Overland quarter moon insert doors are built without applied moulding

HOW TO ORDER

- Specify **IQL** (left) or **IQR** (right) in special Information section
- Add IQ charge to cost of cabinet
- When specifying this modification in 2020, we will use a suffix of .B (Bottom and Base doors), .M (Middle doors) and .T (Top and Wall doors) to indicate correct placement of glass/inserts/mullion doors on a cabinet.
- Pricing P-302

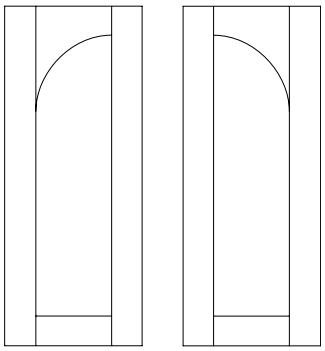

Left *Right*

Left	Right
IQL30	**IQR30**
IQL36	**IQR36**
IQL42	**IQR42**
IQL48	**IQR48**
IQL54	**IQR54**

Block 9527 Quarter Moon Mullion Door

This modification results in a quarter moon wood frame door with mullions that can receive a glass insert.

DESIGN CONSIDERATIONS

- Retainer clips are included
- Glass insert is not included
- Cabinet will receive a finished veneer interior
- Available on Accord, Aero, Avendale, Bedford, Bonita, Breckenridge, Bridgeport, Chesapeake, Clifton, Coralville, Cosmopolitan, Farmington, Fullerton, Hampton, Hanover, Harbor, Harrison, Hudson, Huntingford, Laguna, Lancaster, Lehigh, Manhattan, Medina, Melbourne, Milan, Monroe, Oakley, Orian, Osprey, Overland, Renwick, Richland, Ridgeville, Roanoke, Roseville, Salem, Stockton, Stratford, Taft, Tempo, Tipton, Tucson, Tudor, Waterfall, Waynesville and Westerly door styles
- Available on Alexandria, Allentown, Amsdahl, Charlotte, Danburg, DeWitt, Fairhaven, Gillette, Knottingham, Lafayette, Lafontaine, Laforest, Mackay, Merrimac, Montico, Rocheport, Rock Elm and Winterhaven inset door styles
- Allentown, Amsdahl, Avendale, Harbor, Huntingford, Oakley, Orian, Osprey and Overland quarter moon mullion doors are built without applied moulding

HOW TO ORDER

- Specify **MQL** (left) or **MQR** (right) in special Information section
- Add MQ charge to cost of cabinet
- When specifying this modification in 2020, we will use a suffix of .B (Bottom and Base doors), .M (Middle doors) and .T (Top and Wall doors) to indicate correct placement of glass/inserts/mullion doors on a cabinet.
- Pricing P-302

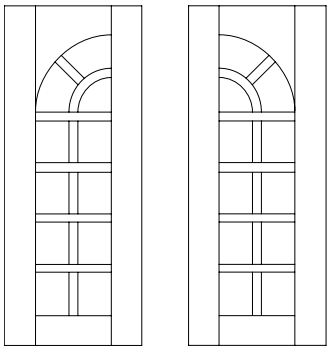

Left *Right*

Left	Right
MQL30	**MQR30**
MQL36	**MQR36**
MQL42	**MQR42**
MQL48	**MQR48**
MQL54	**MQR54**

© Copyright StarMark Cabinetry FEBRUARY 2022

Block 9527 Quarter Moon Mullion Door

continued I

Traditional Overlay

		Cabinet Width	15	30	33/DW/ DDW	33	18	36	39	21	45	24
Cabinet Height	Door Height	Door Width	13	13 15/16	14 1/2	15 7/16	16	16 15/16	17 1/2	19	20 1/2	22
24	22		7	7	7	NA	NA	NA	NA	NA	NA	NA
27	25		7	7	7	7	7	NA	NA	NA	NA	NA
30	28		7	7	7	7	7	7	7	NA	NA	NA
33	31		7	7	7	7	7	7	7	7	7	NA
36	34		9	9	9	9	9	9	9	9	9	9
39	37		9	9	9	9	9	9	9	9	9	9
42	40		11	11	11	11	11	11	11	11	11	11
45	43		11	11	11	11	11	11	11	11	11	11
48	46		13	13	13	13	13	13	13	13	13	13
51	49		13	13	13	13	13	13	13	13	13	13
54	52		15	15	15	15	15	15	15	15	15	15

Modern Overlay

		Cabinet Width	27	15/ DW	30	33/ DDW	33	18	36	39	21	45	24
Cabinet Height	Door Height	Door Width	13 3/16	14 1/2	14 11/16	16	16 3/16	17 1/2	17 11/16	19	20 1/2	22	23 1/2
24	22 3/4		7	7	7	NA	NA	NA	NA	NA	NA	NA	NA
27	25 3/4		7	7	7	7	7	NA	NA	NA	NA	NA	NA
30	28 3/4		7	7	7	7	7	7	7	7	NA	NA	NA
33	31 3/4		7	7	7	7	7	7	7	7	7	NA	NA
36	34 3/4		9	9	9	9	9	9	9	9	9	9	NA
39	37 3/4		9	9	9	9	9	9	9	9	9	9	9
42	40 3/4		11	11	11	11	11	11	11	11	11	11	11
45	43 3/4		11	11	11	11	11	11	11	11	11	11	11
48	46 3/4		13	13	13	13	13	13	13	13	13	13	13
51	49 3/4		13	13	13	13	13	13	13	13	13	13	13
54	52 3/4		15	15	15	15	15	15	15	15	15	15	15

Inset

		Cabinet Width	DW/DDW 33 2 door opening	30	18	33	39 2 door opening	36	21	45 2 door opening	24
Cabinet Height	Door Height	Door Width	13 5/16	13 11/32	14 13/16	14 27/32	16 5/16	16 11/32	17 13/16	19 5/16	20 13/16
27	23 13/16		7	7	7	7	NA	NA	NA	NA	NA
30	26 13/16		7	7	7	7	7	7	7	NA	NA
33	29 13/16		7	7	7	7	7	7	7	7	NA
36	32 13/16		9	9	9	9	9	9	9	9	9
39	35 13/16		9	9	9	9	9	9	9	9	9
42	38 13/16		11	11	11	11	11	11	11	11	11
45	41 13/16		11	11	11	11	11	11	11	11	11
48	44 13/16		13	13	13	13	13	13	13	13	13
51	47 13/16		13	13	13	13	13	13	13	13	13
54	50 13/16		15	15	15	15	15	15	15	15	15

NA: Size not available.

Quarter Moon Mullion Doors look best from 28-40 3/4" high AND 15-18" wide
Mullions on Quarter Moon Mullion Doors will not align with standard Mullion doors.

	Minimum Height			Minimum Width		
Door Stile Width	2 1/4"	2 3/4"	3 3/8"	2 1/4"	2 3/4"	3 3/8"
Qtr Moon Mullion	22"	23"	24 1/4"	13"	14"	15 1/4"

© Copyright StarMark Cabinetry FEBRUARY 2022

I available in Inset cabinetry

Block 9530 Mullion Doors

DESIGN CONSIDERATIONS

- Retainer clips are included
- Glass insert is not included
- Cabinet will receive a finished veneer interior on wood doors
- Allentown, Amsdahl, Avendale, Harbor, Huntingford, Oakley, Orian, Osprey and Overland mullion doors are built without applied moulding.
- Arlington, Altamonte, Bell Gardens, Ellington, Peabody, Redcliff and Syracuse mullion doors will only accept ⅛" glass. Glass clips will not be routed into frame.
- We do not recommend mullion doors on any door modified to 1⅞" stiles on square corner wall cabinets. The hinge is visible through the opening.

HOW TO ORDER

- Indicate **MD** in the Special Information section
- Determine number of lites the cabinet will receive
- See Inset section for number of lites the inset cabinet will receive.
- Add Lites charge to cost of cabinet.
- For non-standard size cabinets, call Technical Assistance at 800-551-3404.
- When specifying this modification in 2020, we will use a suffix of .B (Bottom and Base doors), .M (Middle doors) and .T (Top and Wall doors) to indicate correct placement of glass/inserts/mullion doors on a cabinet.
- Pricing P-302

This modification results in a wood frame door with mullions that can receive a glass, metal or resin insert.

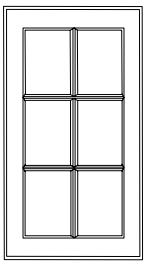

See Inset Specification section for number of Mullions on Inset doors.

	Overlay Number of Mullions													
	Cabinet Width													
		12	**15**	**18**	**21***	**24****	**27**	**30**	**33**	**36**	**39**	**42***	**45**	**48**	**Door Height Break Point**
Cabinet Height	**15**	4	4	4	4	6	8	8	8	8	8	8	12	12	
	18	4	4	4	4	6	8	8	8	8	8	8	12	12	
	21	4	4	4	4	6	8	8	8	8	8	8	12	12	
	24	6	6	6	6	9	12	12	12	12	12	12	18	18	21½" 6 Lite starts
	27	6	6	6	6	9	12	12	12	12	12	12	18	18	
	30	6	6	6	6	9	12	12	12	12	12	12	18	18	
	33	6	6	6	6	9	12	12	12	12	12	12	18	18	
	36	6	6	6	6	9	12	12	12	12	12	12	18	18	
	39	6	6	6	6	9	12	12	12	12	12	12	18	18	
	42	8	8	8	8	12	16	16	16	16	16	16	24	24	39½" 8 Lite starts
	45	8	8	8	8	12	16	16	16	16	16	16	24	24	
	48	8	8	8	8	12	16	16	16	16	16	16	24	24	
	51	8	8	8	8	12	16	16	16	16	16	16	24	24	
	54	10	10	10	10	15	20	20	20	20	20	20	30	30	51½" 10 Lite starts
	57	10	10	10	10	15	20	20	20	20	20	20	30	30	
	60	10	10	10	10	15	20	20	20	20	20	20	30	30	
	20" wide doors receive another column of mullions														

* 21" wide cabinets in Modern Overlay styling will utilize the mullion configuration of the 24" wide cabinet
* 42" wide cabinets in Modern Overlay styling will utilize the mullion configuration of the 45" wide cabinet
** If the cabinet has butt doors (indicated by the 2 Prefix) utilize the mullion configuration of the 27" wide cabinet

MD/4 Lites
MD/6 Lites
MD/8 Lites
MD/9 Lites
MD/10 Lites
MD/12 Lites
MD/15 Lites
MD/16 Lites
MD/18 Lites
MD/20 Lites
MD/24 Lites
MD/30 Lites

© Copyright StarMark Cabinetry **FEBRUARY 2022**

MISSION INSERT DOOR

This modification results in a wood frame Mission style door with divided lites in the upper section can receive inserts.

DESIGN CONSIDERATIONS

- Square wood frame doors used in cabinets 18" or higher can be ordered as Mission II or Mission III doors
- Not available in Tabor, arched or mitered door styles
- Retainer clips are included
- Allentown, Amsdahl, Avendale, Harbor, Huntingford, Oakley, Orian, Osprey and Overland mullion doors are built without applied moulding.
- Glass insert is not included
- Cabinet will receive a finished veneer interior

HOW TO ORDER

- Specify **MS2** or **MS3** in Special Information section
- Add MS charge to cost of cabinet
- When specifying this modification in 2020, we will use a suffix of .B (Bottom and Base doors), .M (Middle doors) and .T (Top and Wall doors) to indicate correct placement of glass/inserts/mullion doors on a cabinet.
- Pricing P-302

NOTES/CAUTION

- Not available on inset cabinets less than 15" wide.

Block 9540 Mission II Insert Door

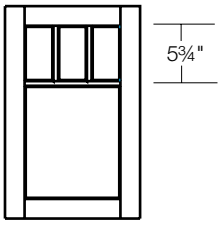

This dimension (5¾") remains constant as door height changes.

- Door has 4 lites
- Three equal size openings in the upper portion

NOTES/CAUTION

- Not available on inset cabinets less than 15" wide.

MS2

Block 9550 Mission III Insert Door

This dimension (1¼") remains constant as door width changes.

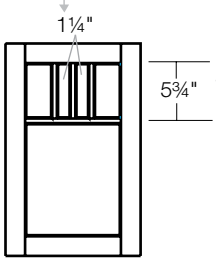

This dimension (5¾") remains constant as door height changes.

- Door has 5 lites
- Width of outside lites increase and decrease with the door size
- Minimum cabinet width
  15" single door
  30" double door

NOTES/CAUTION

- Not available on inset cabinets less than 15" wide.

MS3

Block 9560 Four Lite Mullion Door

This modification results in a wood frame door with mullions that can receive a glass, metal or resin insert. The lites are all the same size, regardless of door size.

DESIGN CONSIDERATIONS

- Mullion door with four equally sized lites
- Retainer clips are included
- Glass insert is not included
- Cabinet will receive a finished veneer interior
- Allentown, Amsdahl, Avendale, Harbor, Huntingford, Oakley, Orian, Osprey and Overland mullion doors are built without applied moulding.

HOW TO ORDER

- Indicate **4LITE** in the Special Information section
- Add 4LITE charge to the cost of the cabinet
- When specifying this modification in 2020, we will use a suffix of .B (Bottom and Base doors), .M (Middle doors) and .T (Top and Wall doors) to indicate correct placement of glass/inserts/mullion doors on a cabinet.
- Pricing P-302

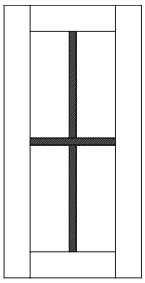

4LITE

Block 9570 Prairie Mullion Door

This modification results in a wood frame Prairie style door with nine lites that can receive an insert.

DESIGN CONSIDERATIONS

- Square wood frame doors can be ordered as Prairie Mullion doors
- Doors have nine lites. See illustration A.
- Exceptions: 2W2430 will have 6 lites. See illustration B. Doors installed on cabinets greater than 36" high will receive an extra horizontal mullion for stability. See illustration C.
- Allentown, Amsdahl, Avendale, Harbor, Huntingford, Oakley, Orian, Osprey and Overland Prairie Mullion doors are built without applied moulding.
- Retainer clips are included
- Glass insert is not included
- Cabinet will receive a finished veneer interior
- Not available in arched or Tabor door styles
- Available on cabinets 15" and higher

HOW TO ORDER

- Specify **PMD** in Special Information section
- Add PMD charge to cost of cabinet
- When specifying this modification in 2020, we will use a suffix of .B (Bottom and Base doors), .M (Middle doors) and .T (Top and Wall doors) to indicate correct placement of glass/inserts/mullion doors on a cabinet.
- Pricing P-302

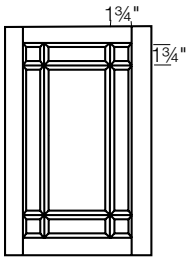

A.

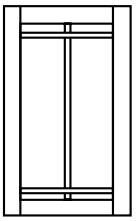

B.

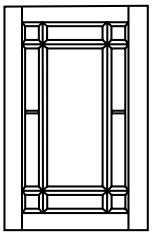

C.

PMD

© Copyright StarMark Cabinetry **FEBRUARY 2022**

Block 9580 Custom Mullion Door

This modification results in a wood frame door with mullions that can receive a glass, metal or resin insert.

DESIGN CONSIDERATIONS

- Minimum cabinet width is 15". Stile width may affect minimum size. See chart below
- Maximum cabinet height is 54"
- Available on Accord, Aero, Avendale, Bedford, Bonita, Breckenridge, Bridgeport, Chesapeake, Claymont, Clifton, Coralville, Cosmopolitan, Farmington, Fullerton, Hampton, Hanover, Harbor, Harrison, Hudson, Huntingford, Laguna, Lancaster, Lehigh, Liberty, Manhattan, Medina, Melbourne, Milan, Monroe, Oakley, Orian, Osprey, Overland, Renwick, Reynolds, Richland, Ridgeville, Roanoke, Roseville, Salem, Stockton, Stratford, Taft, Tempo, Tipton, Tucson and Tudor door styles
- Waterfall, Waynesville and Westerly are available in these Custom Mullion Doors: Portal II and Vennicia.
- Available on Alexandria, Allentown, Amsdahl, Charlotte, Danburg, DeWitt, Fairhaven, Gillette, Knottingham, Lafayette, Lafontaine, Laforest, Mackay, Merrimac, Montico, Rocheport and Rock Elm inset door styles
- Winterhaven inset door styles are available in these Custom Mullion Doors: Portal II and Vennicia.
- Wood retainer frame is included
- Glass insert is not included
- Cabinet will receive a finished veneer interior
- Allentown, Amsdahl, Avendale, Harbor, Huntingford, Oakley, Orian, Osprey and Overland Custom Mullion doors are built without applied moulding
- We do not recommend Custom Mullion doors on any door modified to 1⅞" stiles on square corner wall cabinets. The hinge is visible through the opening.

HOW TO ORDER

- Indicate **nomenclature** in the Special Information section
- Add **Custom Mullion Door** charge to cost of cabinet
- Cannot be placed on rush schedule
- When specifying this modification in 2020, we will use a suffix of .B (Bottom and Base doors), .M (Middle doors) and .T (Top and Wall doors) to indicate correct placement of glass/inserts/mullion doors on a cabinet.
- Pricing P-302-303

Most Custom Mullion Doors look best from 28-40¾" high AND 15-18" wide

	Minimum Height			Minimum Width		
Door Stile Width	**2¼"**	**2¾"**	**3⅜"**	**2¼"**	**2¾"**	**3⅜"**
BOW MD	20 9/16	22 5/16	24½	11¾	12¾	14
CROSSING MD	11¾	12¾	14	11¾	12¾	14
DIAMOND MD	11¾	12¾	14	11¾	12¾	14
ELLIPSE MD	20 9/16	22 5/16	24½	11¾	12¾	14
GOTHIC MD	16¾	17¾	19	11¾	12¾	14
HEIRLOOM MD	14 13/16	15 13/16	17 1/16	11¾	12¾	14
PENDANT MD	11¾	12¾	14	11¾	12¾	14
PORTAL II MD	14½	15½	16¾	14½	15½	16¾
RADIUS MD	17⅝	19⅛	21	11¾	12¾	14
ST. CROSSING MD	17½	18½	19¾	9½	10½	11¾
ST. WINDOW MD	17½	18½	19¾	9½	10½	11¾
VENNICIA MD	18¾	19¾	21	14½	15½	16¾
*VENNICIA MD				19	20	21¼

*Vertical mullion sizing

Block 9580 Custom Mullion Door continued

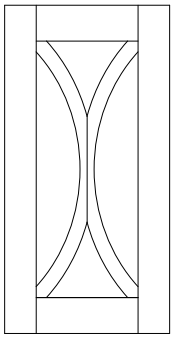

BOW
MBO30
MBO36
MBO42
MBO54

NEW!

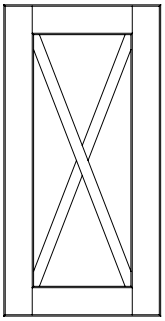

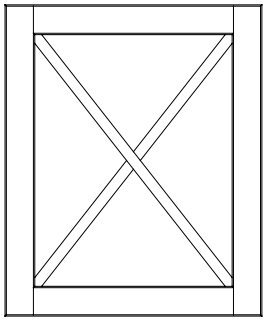

CROSSING
MCR30
MCR36
MCR42
MCR54

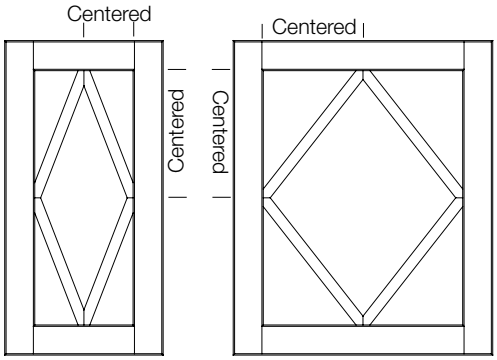

DIAMOND
MDM30
MDM36
MDM42
MDM54

Illustrations depict 2¼" stiles. See chart on left for sizing/mullion variations for other stile widths.

© Copyright StarMark Cabinetry FEBRUARY 2022

Block 9580 Custom Mullion Door continued I

This modification results in a wood frame door with mullions that can receive a glass, metal or resin insert.

DESIGN CONSIDERATIONS

- Minimum cabinet width is 15". Stile width may affect minimum size. See chart below
- Maximum cabinet height is 54"
- Available on Accord, Aero, Avendale, Bedford, Bonita, Breckenridge, Bridgeport, Chesapeake, Claymont, Clifton, Coralville, Cosmopolitan, Farmington, Fullerton, Hampton, Hanover, Harbor, Harrison, Hudson, Huntingford, Laguna, Lancaster, Lehigh, Liberty, Manhattan, Medina, Melbourne, Milan, Monroe, Oakley, Orian, Osprey, Overland, Renwick, Reynolds, Richland, Ridgeville, Roanoke, Roseville, Salem, Stockton, Stratford, Taft, Tempo, Tipton, Tucson and Tudor door styles
- Waterfall, Waynesville and Westerly are available in these Custom Mullion Doors: Portal II and Vennicia.
- Available on Alexandria, Allentown, Amsdahl, Charlotte, Danburg, DeWitt, Fairhaven, Gillette, Knottingham, Lafayette, Lafontaine, Laforest, Mackay, Merrimac, Montico, Rocheport and Rock Elm inset door styles
- Winterhaven inset door styles are available in these Custom Mullion Doors: Portal II and Vennicia.
- Wood retainer frame is included
- Glass insert is not included
- Cabinet will receive a finished veneer interior
- Allentown, Amsdahl, Avendale, Harbor, Huntingford, Oakley, Orian, Osprey and Overland Custom Mullion doors are built without applied moulding
- We do not recommend Custom Mullion doors on any door modified to 1⅞" stiles on square corner wall cabinets. The hinge is visible through the opening.

HOW TO ORDER

- Indicate **nomenclature** in the Special Information section
- Add **Custom Mullion Door** charge to cost of cabinet
- Cannot be placed on rush schedule
- When specifying this modification in 2020, we will use a suffix of .B (Bottom and Base doors), .M (Middle doors) and .T (Top and Wall doors) to indicate correct placement of glass/inserts/mullion doors on a cabinet.
- Pricing P-302-303

Most Custom Mullion Doors look best from 28-40¾" high AND 15-18" wide

	Minimum Height			Minimum Width		
Door Stile Width	**2¼"**	**2¾"**	**3⅜"**	**2¼"**	**2¾"**	**3⅜"**
BOW MD	20 9/16	22 5/16	24½	11¾	12¾	14
CROSSING MD	11¾	12¾	14	11¾	12¾	14
DIAMOND MD	11¾	12¾	14	11¾	12¾	14
ELLIPSE MD	20 9/16	22 5/16	24½	11¾	12¾	14
GOTHIC MD	16¾	17¾	19	11¾	12¾	14
HEIRLOOM MD	14 13/16	15 13/16	17 1/16	11¾	12¾	14
PENDANT MD	11¾	12¾	14	11¾	12¾	14
PORTAL II MD	14½	15½	16¾	14½	15½	16¾
RADIUS MD	17⅝	19⅛	21	11¾	12¾	14
ST. CROSSING MD	17½	18½	19¾	9½	10½	11¾
ST. WINDOW MD	17½	18½	19¾	9½	10½	11¾
VENNICIA MD	18¾	19¾	21	14½	15½	16¾
*VENNICIA MD				19	20	21¼

*Vertical mullion sizing

Block 9580 Custom Mullion Door continued I

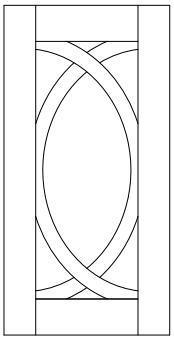

ELLIPSE
MEP30
MEP36
MEP42
MEP54

NEW!

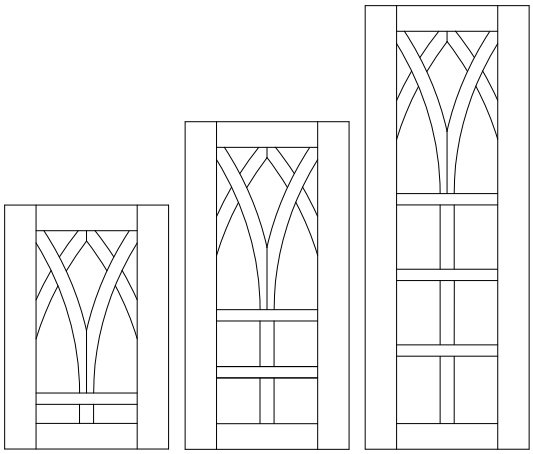

GOTHIC
MGH30
MGH36
MGH42
MGH54

NEW!

GOTHIC SIZING RULES

2¼" stiles
21.5"–28.75" high = 1 cross member
28.76–40.75" high = 2 cross members
40.76"–54" high = 3 cross members

2¾" stiles
22.5–29.75" high = 1 cross member
29.76–41.75" high = 2 cross members
41.76"–54" high = 3 cross members

3⅜" stiles
23.75–31" high = 1 cross member
31.01–43" high = 2 cross members
43.01"–54" high = 3 cross members

Illustrations depict 2¼" stiles. See chart on left for sizing/mullion variations for other stile widths.

© Copyright StarMark Cabinetry FEBRUARY 2022

Block 9580 Custom Mullion Door continued I

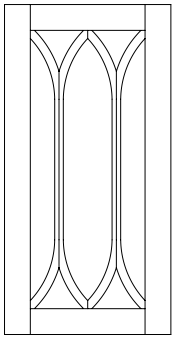

HEIRLOOM
MHM30
MHM36
MHM42
MHM54

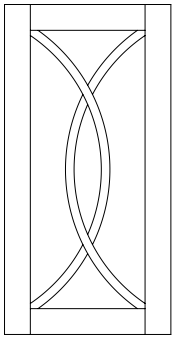

RADIUS
MRD30
MRD36
MRD42
MRD54

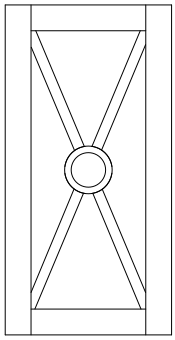

PENDENT
MPD30
MPD36 NEW!
MPD42
MPD54

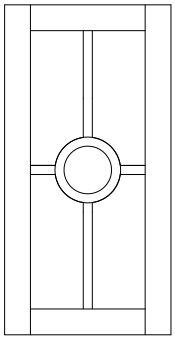

PORTAL II
MPT30
MPT36 NEW!
MPT42
MPT54

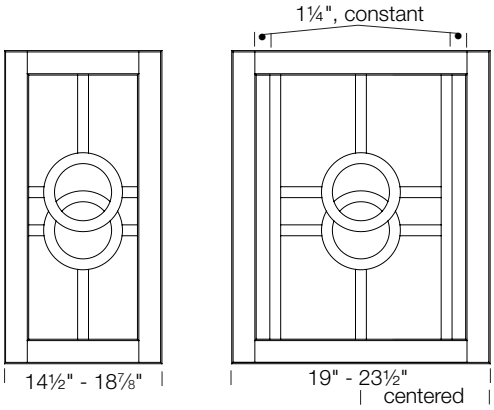

Circle sizes are constant at 7¼"

VENNICIA
MVN30
MVN36
MVN42
MVN54

Block 9580 Custom Mullion Door continued I

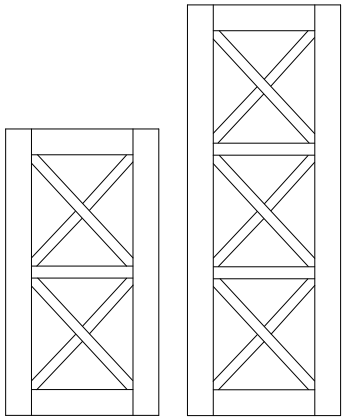

STACKED CROSSING
MCX30
MCX36 NEW!
MCX42
MCX54

STACKED CROSSING SIZING RULES

2¼" stiles
17.5"–24.49" high = 2 stacked X's
24.5" and greater = 3 stacked X's

2¾" stiles
18.5"–25.49" high = 2 stacked X's
25.5" and greater = 3 stacked X's

3⅜" stiles
19.75"–26.74" high = 2 stacked X's
26.75" and greater = 3 stacked X's

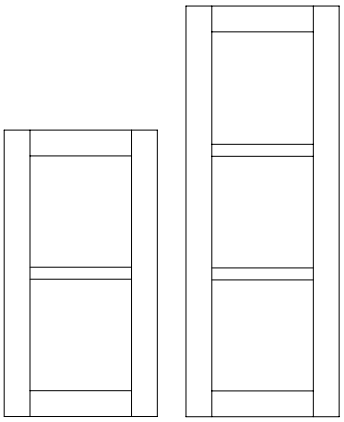

STACKED WINDOW
MSW30
MSW36 NEW!
MSW42
MSW54

STACKED WINDOW SIZING RULES

2¼" stiles
17.5"–24.49" high = 2 stacked openings
24.5" and greater = 3 stacked openings

2¾" stiles
18.5"–25.49" high = 2 stacked openings
25.5" and greater = 3 stacked openings

3⅜" stiles
19.75"–26.74" high = 2 stacked openings
26.75" and greater = 3 stacked openings

© Copyright StarMark Cabinetry FEBRUARY 2022

Block 9580 Custom Mullion Door

continued I

Traditional Overlay

Cabinet Height	Door Height	Cabinet Width / Door Width	15 / 13	30 / 13 15/16	33/DW/DDW / 14 1/2	33 / 15 7/16	18 / 16	36 / 16 15/16	39 / 17 1/2	21 / 19	45 / 20 1/2	24 / 22
24	22		•	•	•	NR	NR	NR	NR	NR	NR	NR
27	25		•	•	•	•	•	NR	NR	NR	NR	NR
30	28		•	•	•	•	•	•	•	NR	NR	NR
33	31		•	•	•	•	•	•	•	•	•	NR
36	34		•	•	•	•	•	•	•	•	•	•
39	37		•	•	•	•	•	•	•	•	•	•
42	40		•	•	•	•	•	•	•	•	•	•
45	43		•	•	•	•	•	•	•	•	•	•
48	46		•	•	•	•	•	•	•	•	•	•
51	49		•	•	•	•	•	•	•	•	•	•
54	52		•	•	•	•	•	•	•	•	•	•

These notes apply to Radius door
22" high door has the same pattern on all doors 14½" wide and wider
25" high door has the same pattern on all doors 16" wide and wider
28" high door has the same pattern on all doors 17½" wide and wider
31" high door has the same pattern on all doors 20½" wide and wider

Modern Overlay

Cabinet Height	Door Height	Cabinet Width / Door Width	27 / 13 3/16	15/DW / 14 1/2	30 / 14 11/16	33/DDW / 16	33 / 16 3/16	18 / 17 1/2	36 / 17 11/16	39 / 19	21 / 20 1/2	45 / 22	24 / 23 1/2
24	22 3/4		•	•	•	NR	NR	NR	NR	NR	NR	NR	NR
27	25 3/4		•	•	•	•	•	NR	NR	NR	NR	NR	NR
30	28 3/4		•	•	•	•	•	•	•	•	NR	NR	NR
33	31 3/4		•	•	•	•	•	•	•	•	•	NR	NR
36	34 3/4		•	•	•	•	•	•	•	•	•	•	NR
39	37 3/4		•	•	•	•	•	•	•	•	•	•	•
42	40 3/4		•	•	•	•	•	•	•	•	•	•	•
45	43 3/4		•	•	•	•	•	•	•	•	•	•	•
48	46 3/4		•	•	•	•	•	•	•	•	•	•	•
51	49 3/4		•	•	•	•	•	•	•	•	•	•	•
54	52 3/4		•	•	•	•	•	•	•	•	•	•	•

These notes apply to Radius door
22¾" high door has the same pattern on all doors 14 11/16" wide and wider
25¾" high door has the same pattern on all doors 16 3/16" wide and wider
28¾" high door has the same pattern on all doors 19" wide and wider
31¾" high door has the same pattern on all doors 20½" wide and wider
34¾" high door has the same pattern on all doors 22" wide and wider

Inset

Cabinet Height	Door Height	Cabinet Width / Door Width	DW/DDW 33 INSET 2 / 13 5/16	30 / 13 11/32	18 / 14 13/16	33 / 14 27/32	39/INSET 2 / 16 5/16	36 / 16 11/32	21 / 17 13/16	45/INSET 2 / 19 5/16	24 / 20 13/16
27	23 13/16		•	•	•	•	NR	NR	NR	NR	NR
30	26 13/16		•	•	•	•	•	•	•	NR	NR
33	29 13/16		•	•	•	•	•	•	•	•	NR
36	32 13/16		•	•	•	•	•	•	•	•	•
39	35 13/16		•	•	•	•	•	•	•	•	•
42	38 13/16		•	•	•	•	•	•	•	•	•
45	41 13/16		•	•	•	•	•	•	•	•	•
48	44 13/16		•	•	•	•	•	•	•	•	•
51	47 13/16		•	•	•	•	•	•	•	•	•
54	50 13/16		•	•	•	•	•	•	•	•	•

These notes apply to Radius door
23 13/16" high door has the same pattern on all doors 14 27/32" wide and wider
26 13/16" high door has the same pattern on all doors 17 13/16" wide and wider
29 13/16" high door has the same pattern on all doors 19 5/16" wide and wider

NR: Size may cause door to have an unpleasing appearance due to width and height combination.
NR: Not recommended door sizes for Radius Mullion doors

© Copyright StarMark Cabinetry FEBRUARY 2022

Block 9590 Decorative Glass Inserts

This modification results in a wood frame door that has a decorative glass insert.

DESIGN CONSIDERATIONS

- The minimum cabinet width is 15" for all designs except for Classic, Diamond, Garden, Heirloom and Lace, where the minimum is 18".
- The minimum Inset cabinet width is 18" for all designs except for Classic and Heirloom, where the minimum is 21".
- Maximum cabinet height is 42"
- Lancaster Insert doors specified with leaded glass inserts (GD) are built without a center mullion.
- All designs work with arched and square door styles
- All designs are available with lead caming. Some are available with brass caming. If a design is available with brass (BR), the code BR will be in the nomenclature.
- Cabinet will receive a finished veneer interior
- To add an extra sparkle to the design, add lighting to the interior of the glass cabinet

HOW TO ORDER

- Specify **G____** in the Special Information section
- Add glass charge to cost of cabinet. The cost to prepare the door (ID) is included in the cost of the glass.
- To choose the proper size, see the chart below
- Use the next larger size for cabinets that fall between listed heights.
- When specifying this modification in 2020, we will use a suffix of .B (Bottom and Base doors), .M (Middle doors) and .T (Top and Wall doors) to indicate correct placement of glass/inserts/mullion doors on a cabinet.
- Pricing P-304-305

INSTALLATION TIP

- Decorative glass is installed with clear plastic clips into the door at the factory. The door is shipped loose from the cabinet.
- After all the cabinets are installed, attach the door(s).

Type of door or cabinet	Nomenclature
Thornton Insert	G ____10
Modern overlay doors: minimum cabinet height is 15"	G ____10
Traditional overlay doors: minimum cabinet height is 16"	G ____10
Cabinet 18⅛" to 30" high	G ____30
Cabinet 30⅛" to 36" high	G ____36
Cabinet 36⅛" to 42" high	G ____42

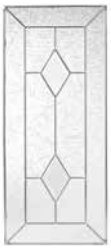

Classic

18" minimum cabinet width
21" minimum cabinet width in Inset

Brass Caming	Lead Caming
GDCLABR10	**GDCLALD10**
GDCLABR30	**GDCLALD30**
GDCLABR36	**GDCLALD36**
GDCLABR42	**GDCLALD42**

Block 9590 Decorative Glass Inserts continued

Heirloom

18" minimum cabinet width
21" minimum cabinet width in Inset

GDHEI10
GDHEI30
GDHEI36
GDHEI42

Lattice

Brass Caming	Lead Caming
GDLATBR10	**GDLATLD10**
GDLATBR30	**GDLATLD30**
GDLATBR36	**GDLATLD36**
GDLATBR42	**GDLATLD42**

Mullion

Brass Caming	Lead Caming
GDMULBR10	**GDMULLD10**
GDMULBR30	**GDMULLD30**
GDMULBR36	**GDMULLD36**
GDMULBR42	**GDMULLD42**

Prairie

GDPRA10
GDPRA30
GDPRA36
GDPRA42

© Copyright StarMark Cabinetry **FEBRUARY 2022**

Block 9590 Decorative Glass Inserts continued I

Radius

Brass Caming	Lead Caming
GDRADBR10	**GDRADLD10**
GDRADBR30	**GDRADLD30**
GDRADBR36	**GDRADLD36**
GDRADBR42	**GDRADLD42**

Unity

GDUNI10
GDUNI30
GDUNI36
GDUNI42

Artique

GAQU10
GAQU30
GAQU36
GAQU42

Baroque

GBQU10
GBQU30
GBQU36
GBQU42

Clear Bevel

When beveled glass is inserted into a Avendale, Harbor or Huntingford door the bevels will not show.

GCLB10
GCLB30
GCLB36
GCLB42

Block 9590 Decorative Glass Inserts continued I

Clear

GCL10
GCL30
GCL36
GCL42

Cotswald

GCT10
GCT30
GCT36
GCT42

Glue Chip

GGC10
GGC30
GGC36
GGC42

KoKo Seedy

- Variations such as bubbles, dips, creases and slight changes in color add to the unique character of KoKo Seedy glass inserts.

GKS10
GKS30
GKS36
GKS42

½ Reed

- ½" Reed only available on cabinets 33" wide or less.

GRDL10
GRDL30
GRDL36
GRDL42

⅛ Reed

- ⅛" Reed only available on cabinets 33" wide or less.

GRDS10
GRDS30
GRDS36
GRDS42

Water

- Water insert only available up to 24" wide.

GWAT10
GWAT30
GWAT36
GWAT42

© Copyright StarMark Cabinetry FEBRUARY 2022

Block 9592 Tempered Clear and Satin Glass Inserts

This modification results in a wood frame door or drawer header that has a tempered clear or satin glass insert.

DESIGN CONSIDERATIONS

- Clear and satin glass inserts work with standard and custom size cabinets
- Clear and satin glass inserts work with arched and square door styles and Vegetable Storage drawers (VSDF). See Block 9820.
- Cabinet will receive a finished veneer interior

HOW TO ORDER

- There is an extended lead time for these inserts. See Cycle Ship for more information.
- The nomenclature suffix indicates height of the insert, i.e. TCR30 is a Clear glass insert that is 30 inches high.
- Specify **T**___ in the Special Information section
- Add clear or satin glass insert charge to cost of cabinet
- When specifying this modification in 2020, we will use a suffix of .B (Bottom and Base doors), .M (Middle doors) and .T (Top and Wall doors) to indicate correct placement of glass/inserts/mullion doors on a cabinet.
- Pricing P-305

INSTALLATION TIP

- Clear and satin glass inserts are installed with clear plastic clips into the door or drawer at the factory.

Type of door or cabinet	Nomenclature
Thornton Insert	T ____24
Modern overlay doors: minimum cabinet height is 15"	T ____24
Traditional overlay doors: minimum cabinet height is 16"	T ____24
Cabinet 24 1/16" to 30" high	T ____30
Cabinet 30 1/16" to 36" high	T ____36
Cabinet 36 1/16" to 48" high	T ____48
Cabinet 48 1/16" to 54" high	T ____54
Cabinet 54 1/16" to 66" high	T ____66

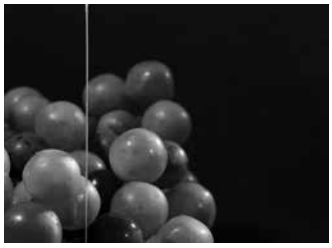

Tempered Clear
TCR24
TCR30
TCR36
TCR48
TCR54
TCR66

Tempered Satin
TSN24
TSN30
TSN36
TSN48
TSN54
TSN66

Block 9594 Textured Tempered Glass Insert

This modification results in a wood frame door or drawer header that has a textured tempered glass insert.

DESIGN CONSIDERATIONS

- All of the textured glass inserts work with standard and custom size cabinets
- All of the textured glass inserts work with arched and square door styles and Vegetable Storage drawers (VSDF). See Block 9820.
- Cabinet will receive a finished veneer interior

HOW TO ORDER

- There is an extended lead time for these inserts. See Cycle Ship for more information.
- The nomenclature suffix indicates height of the insert, i.e. TLD30 is a Listral D glass insert that is 30 inches high.
- Specify **T**___ in the Special Information section
- Add textured glass insert charge to cost of cabinet
- When specifying this modification in 2020, we will use a suffix of .B (Bottom and Base doors), .M (Middle doors) and .T (Top and Wall doors) to indicate correct placement of glass/inserts/mullion doors on a cabinet.
- Pricing P-306

INSTALLATION TIP

- Textured glass inserts are installed with clear plastic clips into the door or drawer at the factory.

Type of door or cabinet	Nomenclature
Thornton Insert	T ____24
Modern overlay doors: minimum cabinet height is 15"	T ____24
Traditional overlay doors: minimum cabinet height is 16"	T ____24
Cabinet 24 1/16" to 30" high	T ____30
Cabinet 30 1/16" to 36" high	T ____36
Cabinet 36 1/16" to 48" high	T ____48
Cabinet 48 1/16" to 54" high	T ____54
Cabinet 54 1/16" to 66" high	T ____66

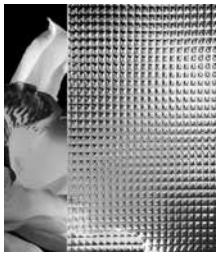

Textured Tempered
Listral D
TLD24
TLD30
TLD36
TLD48
TLD54
TLD66

© Copyright StarMark Cabinetry **FEBRUARY 2022**

Block 9596 Resin Inserts

This modification results in a wood frame door or drawer header that has a resin insert.

DESIGN CONSIDERATIONS

- All of the Resin inserts work with standard and custom size cabinets
- All of the Resin inserts work with arched and square door styles and Vegetable Storage drawers (VSDF). See Block 9820.
- Cabinet will receive a finished veneer interior

HOW TO ORDER

- There is an extended lead time for these inserts. See Cycle Ship for more information.
- The nomenclature suffix indicates height of the insert, i.e. RTH30 is a Thatch Resin insert that is 30 inches high.
- Specify **R___** in the Special Information section
- Add Resin insert charge to cost of cabinet
- When specifying this modification in 2020, we will use a suffix of .B (Bottom and Base doors), .M (Middle doors) and .T (Top and Wall doors) to indicate correct placement of glass/inserts/mullion doors on a cabinet.
- Pricing P-306

INSTALLATION TIP

- Resin inserts are installed with clear plastic clips into the door or drawer at the factory.

Type of door or cabinet	Nomenclature
Thornton Insert	R ____24
Modern overlay doors: minimum cabinet height is 15"	R ____24
Traditional overlay doors: minimum cabinet height is 16"	R ____24
Cabinet 24 1/16" to 30" high	R ____30
Cabinet 30 1/16" to 36" high	R ____36
Cabinet 36 1/16" to 48" high	R ____48
Cabinet 48 1/16" to 54" high	R ____54
Cabinet 54 1/16" to 66" high	R ____66

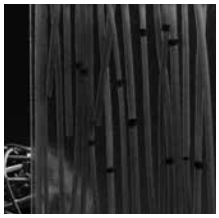

Resin Thatch
RTH24
RTH30
RTH36
RTH48
RTH54
RTH66

Resin Bear Grass
RBG24
RBG30
RBG36
RBG48
RBG54
RBG66

Resin Linea Ivory
RLR24
RLR30
RLR36
RLR48
RLR54
RLR66

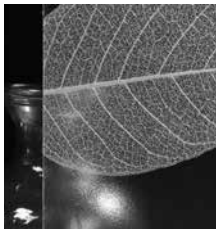

Resin Fossil Leaves
RFL24
RFL30
RFL36
RFL48
RFL54
RFL66

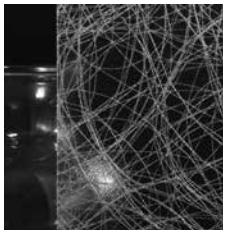

Resin Wisp Silver
RWS24
RWS30
RWS36
RWS48
RWS54
RWS66

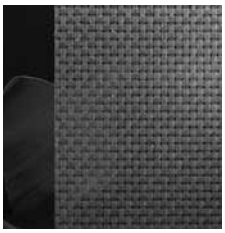

Resin Quattro Carbon
RQC24
RQC30
RQC36
RQC48
RQC54
RQC66

Block 9600 Brass Inserts

This modification results in a wood frame door that has a metal grille insert.

DESIGN CONSIDERATIONS

- Grille insert has Antique Brass finish
- Brass inserts are installed in the door at the factory
- Cabinet will receive a finished veneer interior
- Brass insert can be installed with glass insert. Both charges apply.

HOW TO ORDER

- Specify **IDAB** in the Special Information section
- Add IDAB charge to cost of cabinet
- When specifying this modification in 2020, we will use a suffix of .B (Bottom and Base doors), .M (Middle doors) and .T (Top and Wall doors) to indicate correct placement of glass/inserts/mullion doors on a cabinet.
- Pricing P-306

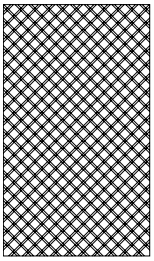

IDAB

Block 9610 Woven Wire Inserts

This modification results in a wood frame door or drawer header that has a woven wire insert.

DESIGN CONSIDERATIONS

- All wood frame doors and VSDF drawer headers can be ordered with a Woven Wire insert
- Woven Wire has an Antique Silver Finish
- Woven Wire is installed in the door at the factory
- Cabinet will receive a finished veneer interior
- Woven wire can be installed with glass insert. Both charges apply.

HOW TO ORDER

- Specify **IDSL____** in the Special Information section
- Add the IDSL charge to cost of cabinet
- The cost of the Insert door is included in the cost of the Woven Wire.
- When specifying this modification in 2020, we will use a suffix of .B (Bottom and Base doors), .M (Middle doors) and .T (Top and Wall doors) to indicate correct placement of glass/inserts/mullion doors on a cabinet.
- Pricing P-307

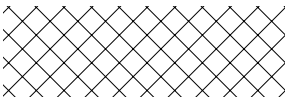

12" High
IDSL12

12"-30" High
IDSL30

31"-36" High
IDSL36

37"-42" High
IDSL42

Drawer Fronts
IDSLDW

© Copyright StarMark Cabinetry FEBRUARY 2022

Block 9620 Cottage Wire Inserts

This modification results in a wood frame door, a drawer header or a valance that has a cottage wire insert.

DESIGN CONSIDERATIONS

- All wood frame doors, VSDF drawer headers, frame valances and valance cut-out inserts can be ordered with a Cottage Wire insert
- Cottage Wire is available in Copper (C), Brass (B) and Antique Silver (AS) finishes
- Cottage Wire is installed in the door at the factory
- Cabinet will receive a finished veneer interior
- Cottage wire can be installed with glass insert. Both charges apply.

HOW TO ORDER

- Specify **IDCW____** in the Special Information section
- Add the IDCW charge to cost of cabinet
- The cost of the Insert door is included in the cost of the Cottage Wire.
- When specifying this modification in 2020, we will use a suffix of .B (Bottom and Base doors), .M (Middle doors) and .T (Top and Wall doors) to indicate correct placement of glass/inserts/mullion doors on a cabinet.
- Pricing P-307

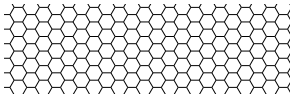

12" High	37"-42" High
IDCW12C	**IDCW42C**
IDCW12B	**IDCW42B**
IDCW12AS	**IDCW42AS**
13"-30" High	Drawer Fronts
IDCW30C	**IDCWDWC**
IDCW30B	**IDCWDWB**
IDCW30AS	**IDCWDWAS**
31"-36" High	3" x 3" Valance Insert
IDCW36C	**IDCW3VC**
IDCW36B	**IDCW3VB**
IDCW36AS	**IDCW3VAS**

This icon indicates that this product is illustrated in the Products in Color Section.

This icon indicates that a sales aid is available. See the SALES AID order form.

This icon indicates that this product is available in Inset Cabinetry

Block 9645 Faux Look Inserts

This modification results in a wood frame door or drawer header that has a faux look insert.

DESIGN CONSIDERATIONS

- All of the faux inserts work with standard and custom size cabinets
- All of the faux insert work with arched and square door styles and Vegetable Storage drawers (VSDF). See Block 9820.
- Cabinets will have standard melamine interiors.

HOW TO ORDER

- The nomenclature suffix indicates height of the insert, i.e. FLI30 is a Faux Leather insert that is 30 inches high.
- Specify **FI___** in the Special Information section
- Add faux insert charge to cost of cabinet
- When specifying this modification in 2020, we will use a suffix of .B (Bottom and Base doors), .M (Middle doors) and .T (Top and Wall doors) to indicate correct placement of glass/inserts/mullion doors on a cabinet.
- Pricing P-307

INSTALLATION TIP

- Faux inserts are installed with clear plastic clips into the door at the factory.

Type of door or cabinet	Nomenclature
Thornton Insert	FI ____10
Modern overlay doors: minimum cabinet height is 15"	FI ____10
Traditional overlay doors: minimum cabinet height is 16"	FI ____10
Cabinet 18⅛" to 30" high	FI ____30
Cabinet 30⅛" to 36" high	FI ____36
Cabinet 36⅛" to 42" high	FI ____42

Faux Leather	Faux Carbon
FLI10	**FCI10**
FLI30	**FCI30**
FLI36	**FCI36**
FLI42	**FCI42**
FLI48	**FCI48**
FLI54	**FCI54**

Faux Planked
FPI10
FPI30
FPI36
FPI42
FPI48
FPI54

© Copyright StarMark Cabinetry **FEBRUARY 2022**

Block 9700 Pocket Doors

This modification replaces standard doors with pocket flipper doors.

DESIGN CONSIDERATIONS

- Side Mount pocket doors are available for cabinets 18" deep (maximum width of 33"), 21" deep (maximum width of 39") and 24" deep (maximum width of 45")
- Side mount minimum opening height is 15"
- Side mount maximum opening height is 45"
- Top Mount pocket doors are available on cabinets 15"-27" wide and minimum of 18" deep.
- Top Mount minimum opening height is 15"
- Top Mount maximum opening height is 24"
- The interior of this cabinet will be visible. If a finished interior is desired order **PDSTIN.**
- All door styles are available. However, Hampton, Lamesa and Manchester doors may give an undesirable appearance.
- All four edges of the pocket door have a profile
- When closed, doors are flush with face frame
- Shelves are not included. If shelves are desired, specify Block 9380 Vertical Partitions.
- Inward door travel is 12" for 18" deep cabinet; 16" for 21" cabinet; 18" for 24" cabinet
- Make sure you have enough space for electronics. Calculate the available interior space by subtracting 3" from the width of the cabinet (to account for the frame) and 1.75" inches for one door (to account for proper operation of the door), or 3.5" for two doors. For example, a 45" wide cabinet with double doors will have 38.5" of interior space: 45-(3+3.5)=38.5.

HOW TO ORDER

- Specify **PD Side Mount or PD Top Mount** in the Special Information section
- Add PD charge to the cost of the cabinet
- Specify **L** or **R** hinging for single door side mount pocket doors.
- Pricing P-<?>

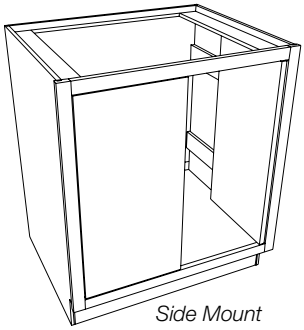

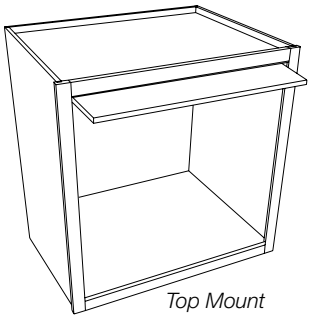

PD
PDSTIN

Block 9710 Delete Doors

This modification results in a cabinet that has no doors or drawer headers.

DESIGN CONSIDERATIONS

- **DELDR** delete doors only. Headers and drawer boxes remain if applicable.
- **DELHR** delete headers only. Doors and drawer boxes remain if applicable.
- **DLDHD** delete doors and headers. Drawer boxes and shelving remain if applicable.
- **DLALL** delete doors, headers and drawer boxes. Only cabinet carcass remains; without shelving, roll trays, drawer boxes, doors or headers.

HOW TO ORDER

- Specify **DELDR, DELHR, DLDHD** or **DLALL** in the Special Information section
- Deduct percent from the cost of the cabinet
- An ogee inside edge is available at no charge. Specify **OGEE EDGE** on your order.
- Pricing P-307

The interior of this cabinet will be visible. See block 9480 to order a Finished Veneer Interior (STIN).

DELDR example

Before

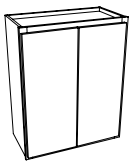

After

DELDR delete doors only
DELHR delete headers only
DLDHD delete doors and headers
DLALL delete doors, headers and drawer boxes

Block 9720 Full Height Doors

This modification replaces a door and drawer combination with a full height door.

DESIGN CONSIDERATIONS

HOW TO ORDER

- Specify **FHD** in Special Information section
- There is no charge for this option
- Pricing P-307

Before

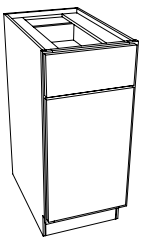

After

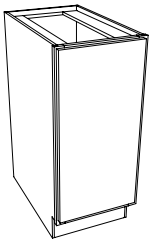

FHD

© Copyright StarMark Cabinetry FEBRUARY 2022

Block 9730 Face Frame with Door

This modification results in a face frame and door that covers a specified dimension. No box is built.

DESIGN CONSIDERATIONS

- Base, tall and vanity face frame with doors will have toe kick attached, unless otherwise specified.
- If FF&D is being applied to the back of an island or peninsula, specify WBR and fixed doors.
- If FF&D is being applied to a wall, i.e. laundry chute, specify no dadoes, finish all four sides and label loose.

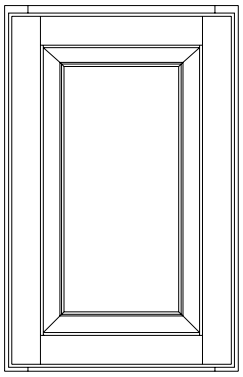

FFD
FFD custom size

HOW TO ORDER

Standard Size FF&D

- In the Cabinet Number column, prefix the cabinet nomenclature with **FF&D**, for example, FF&DW1230.
- Deduct 35 percent from the cost of the cabinet.
- Specify fixed door or operating door.
- For operating single door specify **L** or **R**.

Custom FF&D

- In the Cabinet Number column, specify **FF&D** and suffix with the **width** and **height**, for example, FF&D1430.
- Determine square footage of the FF&D, remembering to convert inches to feet and to round up to the nearest foot.
- Multiply by the square foot charge and record the total cost in the price column.
- Specify fixed door or operating door.
- For operating single door specify **L** or **R**.
- Pricing P-308

Block 9740 Attached Mullion

This modification results in a cabinet that has a face frame mullion attached to the left door.

DESIGN CONSIDERATIONS

- Available for cabinets that
  - are up to and including 36" wide
  - have two doors
  - the doors have a Traditional overlay

HOW TO ORDER

- Specify **ATMUL** in the Special Information section
- Add ATMUL charge to cost of cabinet
- Unless you specify RIGHT in Special Information, the mullion will be attached to the left door
- Pricing P-308

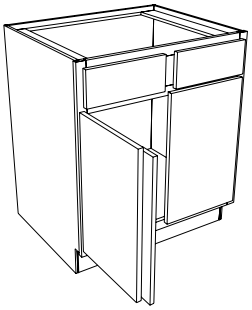

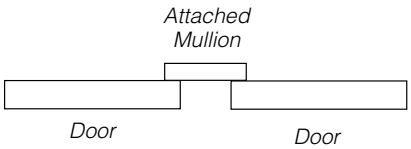

ATMUL

Block 9750 Finger Routes

This modification results in doors and drawer headers that have finger routes.

DESIGN CONSIDERATIONS

3½" Wide - 3/4" Deep

- Finger routes eliminate the need for hardware
- Available on Alite, Ashford, Bedford, Salem and Tudor doors
- Not available on Modern Overlay door styles.
- Not available on pocket doors
- Not available with Decorator Edge.
- Not available with Regent Drawer profile
- Cabinets wider than 24" will have 2 finger routes per drawer header.
- Bottom drawer has route on top edge. All other drawers have route on the bottom edge.
- This option applies to the entire order.

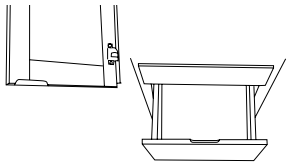

FR

HOW TO ORDER

- Check FINGER ROUTES in the STYLING OPTIONS box, found on the first page of the order form
- Specify **FR** as a separate line item
- To price, total the doors and drawer headers in the order, multiply by the FR charge, and specify the total in the price column
- Pricing P-308

Block 9760 Bevel Pull

This modification results in doors and drawer headers that have bevel pulls.

DESIGN CONSIDERATIONS

- Doors and drawer headers with top and bottom bevel pulls for a non-decorative hardware application
- Available on Alite, Ashford, Bedford, Salem and Tudor doors
- Not available on Modern Overlay door styles.
- Not available on pocket doors
- This option applies to the entire order.
- Not available with Decorator Edge.
- Not available with Regent Drawer profile

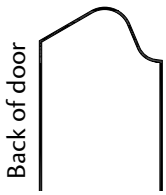

BP

HOW TO ORDER

- Check BEVEL PULL in the STYLING OPTIONS box, found on the first page of the order form
- Specify **BP** as a separate line item
- There is no charge for this option
- Pricing P-308

© Copyright StarMark Cabinetry FEBRUARY 2022

Block 9770 Locks

This modification results in a door or drawer built with a cam lock.

DESIGN CONSIDERATIONS

- The lock has an Antique Brass finish
- Not available in Mitered door styles.
- Not available on butt doors. Butt door cabinets have a "2" prefix.
- Not available on five-piece, Profiled or Regent header drawers.
- All locks are keyed the same.

HOW TO ORDER

- Specify **LOCKS** in the Special Information section
- Specify which doors or drawers on the cabinet should receive locks
- Add the LOCKS charge to the cost of the cabinet as a per door/ drawer charge
- Pricing P-308

LOCKS

Block 9790 Edge Treatments

This modification replaces the standard edge detail on doors and drawer headers with an optional edge treatment.

DESIGN CONSIDERATIONS

- The Regent profile is not available on orders containing the Decorator Edge, H edge, A edge or M edge.
- The Edge Treatments modification applies to the entire order.
- See Cabinetry Specifications section for availability and for more information on the Edge Treatments.

HOW TO ORDER

- Check OPTIONAL EDGE in the STYLING OPTIONS box, found on the first page of the order form
- Specify **EDGE TREATMENTS** in the Special Information section
- There is no upcharge to add Edge Treatments to the doors and drawer headers.
- Pricing P-308

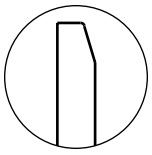

A

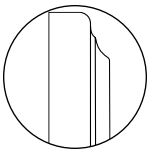

DECO

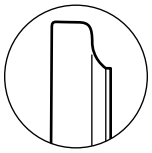

F

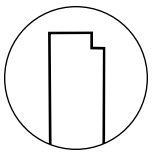

H

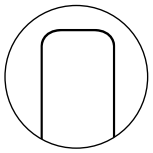

L

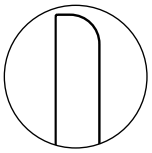

M

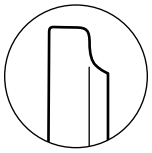

Z2

Block 9800 Furniture Pegs

This modification results in a door or five piece drawer header that has furniture pegs.

DESIGN CONSIDERATIONS

- See Door Specification Matrix for availability
- Furniture pegs are <u>not</u> available on mitered door styles, slab doors or slab headers
- Pegs are 5/16" square wood pegs driven into a 3/8" diameter drill hole
- NOTE: This is a rustic look. The gaps between the peg and the hole are not filled and are visible. See illustration below. View a sample door to confirm desirability of this option.
- Oak pegs will be used in alder, oak, cherry, hickory and walnut doors
- Maple pegs will be used in maple doors
- When Decorator Edge is specified, Single Peg is the only option available
- This option applies to the entire order.

HOW TO ORDER

- Check DOUBLE PEGS or SINGLE PEGS in the STYLING OPTIONS box, found on the first page of the order form
- Specify **SPEGS** or **DPEGS** in the Special Information section
- Determine the number of doors/ drawers that will receive pegs
- Multiply the number by the pegs charge and add to cost of cabinet
- Pricing P-308

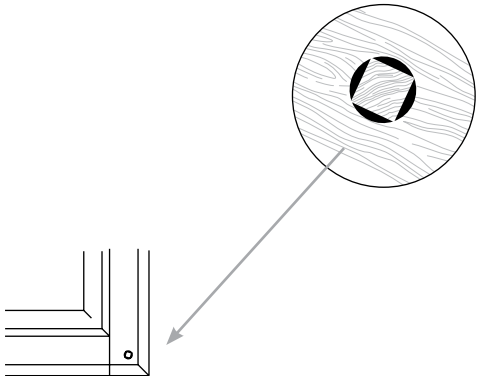

Single furniture peg

SPEGS
SPEGS

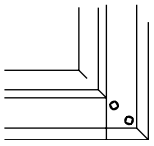

Double furniture peg

DPEGS
DPEGS

© Copyright StarMark Cabinetry **FEBRUARY 2022**

Block 9810 Scooped Drawers

This modification results in a drawer that has scooped sides.

DESIGN CONSIDERATIONS

- Drawers are still functional, but sides of drawers are cut down 2" to accept installation of certain cooktops
- Minimum cabinet depth of 15" and minimum drawer depth of 12"

HOW TO ORDER

- Specify **SCPDWR** in Special Information section on order form
- There is no charge for this option
- Pricing P-308

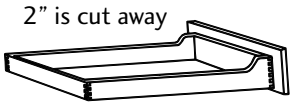

SCPDWR

Block 9820 Vegetable Storage Drawer

This modification results in drawer headers that have an opening that can receive an insert.

DESIGN CONSIDERATIONS

- Drawer opening must be 6" or higher for overlay or Inset door styles.
- Drawer header has five-piece construction with mortise and tenon detail. This construction does not match mitered door styles. See Illustration A.
- Center panel is open to receive insert. See Illustration B.
- Inserts are sold separately. Leaded glass is not recommended.
- Drawer partition is shipped loose
- Drawer box is ⅝" solid hardwood, finished in Natural.

HOW TO ORDER

- Specify **VSDF** in the Special Information section
- Determine number of drawers in the cabinet
- Multiply the number by the VSDF charge and add to cost of cabinet
- Pricing P-308

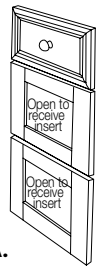

A.

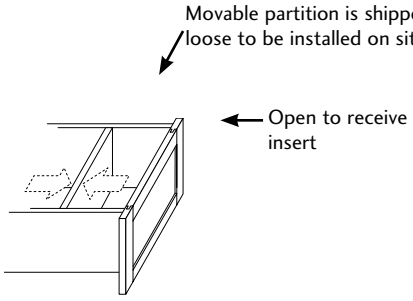

B.

VSDF

Block 9830 Regent Profile Drawer Header

This modification replaces the standard slab header with a routed profile.

DESIGN CONSIDERATIONS

- Available on the Accord, Alite, Ashford, Avendale, Breckenridge, Chesapeake, Clifton, Coralville, Cosmopolitan, Georgetown, Harbor, Huntingford, Lehigh, Medina, Melbourne, Renwick, Richland, Ridgeville, Roanoke, Roseville, Salem, Stockton, Stratford, Taft, Tipton, Tucson and Tudor door styles.
- If you specify a REGENT PROFILE on these drawers, bevel pull, finger route, five piece header and locks are not available.
- A REGENT PROFILE on a desk drawer (DKV), Pull Out Keyboard (POK) and Vanity Desk Drawer (VDD) reduces the center panel to about one inch high. Larger styles of decorative hardware may not fit in this area.
- This option applies to the entire order. Every drawer will receive a Regent Profile except for cabinets with a flip down header (blocks 2310, 2315, 2340).
- Drawer header with a Regent Profile is ¾" thick at center and approximately ⅜" thick at outer step, near edge.

HOW TO ORDER

- Check REGENT PROFILE in the STYLING OPTIONS box, found on the first page of the order form.
- Specify **REGENT PROFILE** as a separate line item
- To price, total the drawers and drawers fronts in the order, multiply by the REGENT PROFILE charge, and specify the total in the price column.
- Pricing P-308

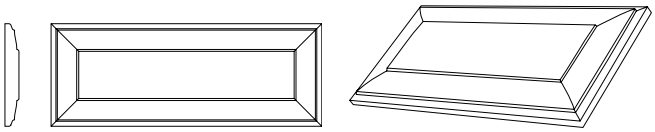

REGENT PROFILE

© Copyright StarMark Cabinetry FEBRUARY 2022

Block 9835 Profiled Drawer Header

This modification replaces the standard slab drawer header with a profiled drawer header.

DESIGN CONSIDERATIONS

- Minimum header height of 3½" required.
- Rolled profiled drawer header available on the Accord, Arlington, Bell Gardens, Ellington, Georgetown, Huntingford, Lehigh, Melbourne, Peabody, Prescott, Redcliff, Ridgeville, Sundance, Syracuse and Venice door styles.
- Scooped profiled drawer header available on Alite, Breckenridge, Glendale, Hanover, Tudor, Verona and Westerly door styles.
- See Inset Specifications for Inset doors available with Profiled Drawer Headers.
- If you specify a PROFILED HEADER on these drawers, bevel pull, finger route, five piece header and locks are not available.
- A PROFILED HEADER on a desk drawer (DKV), Pull Out Keyboard (POK) and Vanity Desk Drawer (VDD) reduces the center panel to about one inch high. Larger styles of decorative hardware may not fit in this area.
- This option applies to the entire order. Every drawer will receive a Profiled Header except for cabinets with a flip down header (blocks 2310, 2315, 2340).
- Rolled profile coordinates with doors with a rolled center panel profile. Scooped profile coordinates with a scooped H center panel. See below.

HOW TO ORDER

- Check PROFILED HEADER in the STYLING OPTIONS box, found on the first page of the order form.
- Specify **PROFILED HEADER** as a separate line item
- To price, total the drawers and drawers fronts in the order, multiply by the PROFILED HEADER charge, and specify the total in the price column.
- Pricing P-308

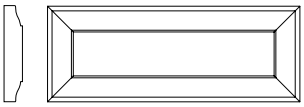

Rolled

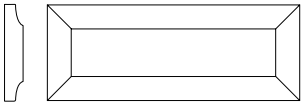

Scooped

PROFILED HEADER

Block 9840 Five Piece Drawer Header Option

This modification replaces the standard slab drawer header with a five-piece drawer header.

DESIGN CONSIDERATIONS

- See Cabinetry Specification section for availability and illustration of option on available door styles.
- This option is applied to the entire order
- Any drawer opening less than 4½" high will have a slab header.
- Any drawer opening less than 5 11/16" high in Inset will have a slab header.

HOW TO ORDER

- Check Five Piece Drawer Header in the STYLING OPTIONS box, found on the first page of the order form
- Specify **5PC HDR** as a separate line item
- To price, total the drawers and drawer headers in the order, multiply by the 5PC HDR charge, and specify the total in the price column
- Pricing P-308

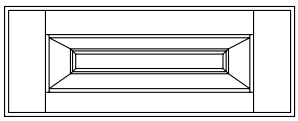

5PC HDR

© Copyright StarMark Cabinetry **FEBRUARY 2022**

THIS PAGE INTENTIONALLY LEFT BLANK

© Copyright StarMark Cabinetry **FEBRUARY 2022**

THIS PAGE INTENTIONALLY LEFT BLANK

© Copyright StarMark Cabinetry FEBRUARY 2022

Index

Description	Nomenclature	Page
3/4" Plywood Plinth Shelf with Decorator Trim	PSH	C-372
3/4" Plywood Shelving	PS	C-372
Acrylic Tray	VBPOTKIT	C-382
All-Wood Drawer Organizers	CIDW	C-376
Base Kitchen Basket Kit	KBK	C-385
Base Mini Pantry Kit	BFPK	C-382
Base Pantry with OXO Storage Kit	BPOXOK	C-382
Base Plastic Ware Storage Kit	BPSK	C-380
Baskets for Pull Out Pantry with Soft Close	PTYSC	C-371
Beverage Pod Tiered Rack	KCUPTR	C-375
Blum Restrictor Clips	BLRESTRICT	C-387
Bread Board	BB	C-374
Bread Liner	BL	C-379
Chopping Block	CB	C-374
Chrome/Wood Baskets	CHWBK	C-371
Chrome/Wood Turntable	DWWLP	C-380
Cutlery Divider	CD	C-378
Cutlery Divider Box	CDB	C-378
Cutlery Expandable Rack	CER	C-376
Cutlery Tiered Rack	CTR	C-375
Cutlery Wood Organizers	CWO	C-378
Cutlery Wood Rack	CWR	C-378
Door Mount Aluminum Foil Rack Holder	DFR	C-381
Drawer Front Bins	DFB	C-379
Drawer Organizer	DPEG	C-380
Drawer Peg Pan and Lid Storage	DPEGPAN/ DPEGLID	C-380
Drawer Spice Rack	DSR	C-375
DVD/Blu-ray Player Shelf	3SVCRS	C-386
Fineline Cutlery Insert	FLCUT	C-377
Fineline Cutlery Box	FLCUTBX	C-377
Fineline Cutlery Box Deep	FLCUTBXD	C-377
Fineline Drawer Liner	FLDRWLING	C-377
Folding Step	FS	C-384
Frame Kit for Base Pullout Pantry	BPTYFRH	C-371
Frame Kit for BCPTY	BCPTYFRV	C-383
Furniture Frame Shelf with 1/4" Glass	FPWS	C-373
Grooming Kit	VBPOGKIT	C-382
Half Tiered Vanity Drawer Organizer	VDRWVDHT	C-376
Heavy Duty Pull Out TV Swivel Shelf	HDPOTVS	C-382
Inset Black Hinge	HGBLK	C-387
Inset Concealed Hinge	HGIC	C-387
Inset Concealed soft close Hinge	HGICS	C-387
Inset Copper Bronze Hinge	HGCBZ	C-387
Inset Dark Oil Rubbed Bronze Hinge	HGBRO	C-387
Inset Matte Nickel Hinge	HGNIC	C-387
Inset Pewter Hinge	HGIRN	C-387
Installation Screws	IS	C-387
Kitchen Basket Large Kit	KBLK	C-385
Kitchen Basket Large Motion Kit	KBLMK	C-386
Kitchen Basket with Motion Drive Kit	KBMK	C-385
Knife Block	KNB	C-383
L-Shaped Vanity Organizer	VOVSBSC	C-379
Modern Concealed Hinge	OH	C-387
Modern Soft Close Hinge	HGSFCL	C-387
Over Appliance Pull Out (Left and Right Installation)	OAPOR/OAPOL	C-381
Pantry Lazy Susan Kit	LSK	C-384
Pantry Storage Kit	PSK	C-383
Paper Towel Dispenser	PTD	C-386
Pilasters for SSW Shelf Kit	SSWPL	C-381
Plastic Cutlery Divider	PCD	C-375
Pull Out Pantry with Soft Close Frame - Base	BCPTYFM	C-371
Pull Out Pantry with Soft Close Frame - Utility	UCPTYFM	C-371
Range Mate Door Kit	RMDRKT	C-375
Range Mate Kit	RMK	C-375
Recycle Base Kit	RCBK	C-383
Revolving Slide Out Shelf Kit for Square Corner	SRSSK	C-383
Roll Out Tray Divider	RTTD	C-384
Roll Out Tray Kit	RTK	C-369
Roll Out Tray Pilasters		C-370
Shelving	SI_SK	C-372
Single Vanity Drawer Organizer	VDRWVD	C-375
Sink Base Caddy	SBCAD	C-379
Sliding Towel Bar Kit	STBK	C-378
Solid Wood Shelving	SS	C-372
Spice Rack for Base with Mini Pantry	BFPSR	C-374
Spice Shelf Kit	DSK	C-383
SSW Shelf Kit	SSWSH	C-381
Stem Glass Rack	SGR	C-374
Stem Glass Rack and Wine Shelf	SGSW	C-374
Swing-out Shelf Kit for Blind Corner	SOS__K	C-383
Tiered Vanity Drawer Organizer	VDRWVDT	C-375
Traditional Soft Close Hinge	HGSTCL	C-387
Tray Divider	TD	C-384
Twister Pole for Chrome/Wood Turntable	DWWL20TT	C-380
Utility Door Shelf Kit	DSK	C-384
Vanity Door Mounted Storage Rack	VDRVSR	C-381
Vanity Hamper Kit	VHK	C-385
Vanity Hamper Pull Out	VWHMP_KIT	C-385
Vanity Pull Out Kit	VBPOKIT	C-382
Vanity Waste Container	VWC_KIT	C-386
Wall Floating Shelf	WFS	C-373
Wall Lazy Susan Kit	LSK	C-380
Wall Pull Down Pantry Single Shelf Kit	WPDS	C-381
Wall Pull Down Pantry Double Shelf Kit	WPDD	C-381
Wall Spice Shelf	WSS	C-373
Wine Rack Shelf	WRS	C-374
Wood Spice Rack Organizer	DSRW	C-374

© Copyright StarMark Cabinetry FEBRUARY 2022

Index

Description	Nomenclature	Page	Description	Nomenclature	Page

© Copyright StarMark Cabinetry FEBRUARY 2022

Block 10000 Roll Out Trays

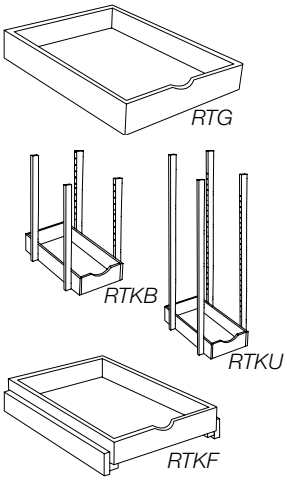

DESIGN CONSIDERATIONS

- Trays are shipped separately to be field installed unless ordered with a specific cabinet for factory installation.

HOW TO ORDER

- EXAMPLE: To order trays for existing cabinet - B45, order:
  (2) RTKB19 - includes pilasters and glides
  (2) RTG225-24 - includes glides
  (1) BVP - See Block 9380
- Nomenclature indicates cabinet width. Unless a specific cabinet is listed.
- Specify **RTFMI** for a roll out tray with a Maple Natural Veneer Interior bottom.
- To modify dimensions, use **ACMOD** in Block 9085. Specify dimensions in special info.
- Pricing P-311

Tray with glides

24" deep cabinet
RTG12-24
RTG135-24 tray for a B135
RTG15-24
RTG165-24 tray for a B165 or B33
RTG18-24
RTG195-24 tray for a B195 or B39
RTG21-24
RTG225-24 tray for a B225 or B45
RTG24-24
RTG27-24
RTG30-24
RTG33-24
RTG36-24
RTG39-24
RTG42-24

21" deep cabinet
RTG12-21
RTG135-21 tray for B135
RTG15-21
RTG165-21 tray for a B165 or B33
RTG18-21
RTG195-21 tray for a B195 or B39
RTG21-21
RTG225-21 tray for a B225 or B45
RTG24-21
RTG27-21
RTG30-21
RTG33-21
RTG36-21
RTG39-21
RTG42-21

18" deep cabinet
RTG12-18
RTG135-18 tray for a B135
RTG15-18
RTG165-18 tray for a B165 or B33
RTG18-18
RTG195-18 tray for a B195 or B39
RTG21-18
RTG225-18 tray for a B225 or B45
RTG24-18
RTG27-18
RTG30-18
RTG33-18
RTG36-18
RTG39-18
RTG42-18

For Base Cabinets: Tray with glides and one set of 4 pilasters
RTKB12
RTKB13 tray for a B33
RTKB15
RTKB16 tray for a B39
RTKB18
RTKB19 tray for a B45
RTKB21
RTKB24
RTKB27
RTKB30
RTKB33
RTKB36
RTKB39
RTKB42

For Utility Cabinets: Tray with glides and one set of 4 pilasters
RTKU12
RTKU13 tray for a U33
RTKU15
RTKU18
RTKU21
RTKU24
RTKU27
RTKU30
RTKU33
RTKU36
RTKU39
RTKU42

For Base and Tall Cabinets: Tray with all glides for floor mounting
RTK12F
RTK13F tray for a B33
RTK15F
RTK16F tray for a B39
RTK18F
RTK19F tray for a B45
RTK21F
RTK24F
RTK27F
RTK30F
RTK33F
RTK36F
RTK39F
RTK42F

Block 10000 Roll Out Trays continued

Custom roll out trays, sized by depth of cabinet
RTGCTM-24
RTGCTM-21
RTGCTM-18
RTGCTM-15
RTGCTM-12

Maple Veneer Interior roll out tray bottom
RTFMI

© Copyright StarMark Cabinetry FEBRUARY 2022

Block 10001 Roll Out Tray Pilasters

NEW! I

DESIGN CONSIDERATIONS

- Pilasters in this block are intended to be used to retrofit cabinets that are already installed so the cabinet can accept roll trays. Order the roll trays (Block 10000) and the glides (Block 10571) separately.
- Pilasters are sold in pairs.
- Not all cabinets can be retrofitted with roll trays
- Please note, if you don't see your End Panel listed below, call Technical Support. One of the pilasters may still work for your particular situation.

HOW TO ORDER

- Select pilasters based on the opening of the cabinet, the construction of the cabinet, and the end panel used.
- Pricing P-312

19.5" Pilasters, Base Opening	Construction	End Panel
PI38BNHIMD	Inset	Non hinge side of an IMDP
PO138BFFFN	Inset/Overlay	Flush, Furniture or Paneled End with Hinge
PI158BFFFN	Inset	Flush, Furniture or Paneled End with Finial Hinge and Butt Doors
PI134BCIMD	Inset	IMDP End Panel with Concealed Hinge
PO118BCSTD	Inset/Overlay	Standard End Panel Hinge Side
PO78BBHSTD	Inset/Overlay	Standard End Panel with Butt Doors
PI214BFFFN	Inset	Flush, Furniture or Paneled End with Concealed Hinge
PI2BBHSTD	Inset	Standard End Panel with Concealed Hinge and Butt Doors
PO58BBHIMD	Inset/Overlay	IMDP End Panel with Butt Doors

42" Pilasters, Utility Opening	Construction	End Panel
PI38UNHIMD	Inset	Non hinge side of an IMDP
PO138UFFFN	Inset/Overlay	Flush, Furniture or Paneled End with Hinge
PI158UFFFN	Inset	Flush, Furniture or Paneled End with Finial Hinge and Butt Doors
PI134UCIMD	Inset	IMDP End Panel with Concealed Hinge
PO118UCSTD	Inset/Overlay	Standard End Panel Hinge Side
PO78UBHSTD	Inset/Overlay	Standard End Panel with Butt Doors
PI214UFFFN	Inset	Flush, Furniture or Paneled End with Concealed Hinge
PI2UBHSTD	Inset	Standard End Panel with Concealed & Butt Doors
PO58UBHIMD	Inset/Overlay	IMDP End Panel with Butt Doors

54" Pilasters, Broom Opening	Construction	End Panel
PI38TNHIMD	Inset	Non hinge side of an IMDP
PO138TFFFN	Inset/Overlay	Flush, Furniture or Paneled End with Hinge
PI158TFFFN	Inset	Flush, Furniture or Paneled End with Finial Hinge and Butt Doors
PI134TCIMD	Inset	IMDP End Panel with Concealed Hinge
PO78TBHIMD	Inset/Overlay	Standard End Panel with Butt Doors
PI214TFFFN	Inset	Flush, Furniture or Paneled End with Concealed Hinge
PO118TCSTD	Inset/Overlay	Standard End Panel Hinge Side

Floor Mount Pilaster	Construction
PFLRMNT	Inset/Overlay

© Copyright StarMark Cabinetry **FEBRUARY 2022**

Block 10020 Frame Kit for Base Pullout Pantry

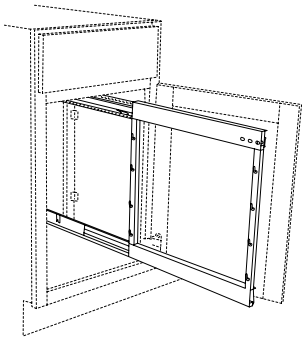

BPTYFRHL
BPTYFRHR

DESIGN CONSIDERATIONS

- See block 10030 for baskets to use with this system
- 53lb load capacity
- 24" minimum cabinet depth
- 19½" minimum frame opening height

HOW TO ORDER

- Order **HR** for a hinge right cabinet
- Order **HL** for a hinge left cabinet
- Pricing P-312

Block 10025 Pull Out Pantry with Soft Close Frame

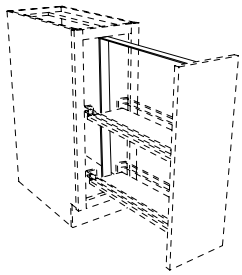

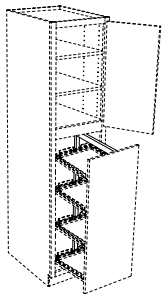

BCPTYFM
UCPTYFM

DESIGN CONSIDERATIONS

- See block 10035 for baskets to use with this system
- Frame attaches to interior of cabinet and cabinet door
- Includes soft close
- Center mounted frame is the same size for all cabinet widths

HOW TO ORDER

- Pricing P-312

Block 10030 Chrome/Wood Baskets

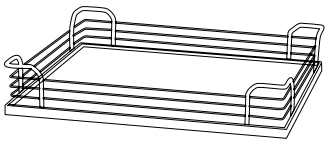

CHWBK9
CHWBK12
CHWBK15
CHWBK18
CHWBK21

DESIGN CONSIDERATIONS

- See block 10020 and 10390 for frame kit to use with this system
- Wood with chrome railing and non-skid surface
- Nomenclature indicates cabinet width

HOW TO ORDER

- Specify the **number** of baskets
- When used with BPTYFR:
  - A 45" base cabinet accommodates two CHWBK18 and two CHWBK21
  - A 48" wide base cabinet accommodates four CHWBK21
- Pricing P-312

Width of cabinet	Width of baskets
9"	4"
12"	6"
15"	9"
18"	12"
21"	15"

Block 10035 Baskets for Pull Out Pantry with Soft Close

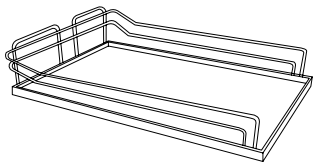

PTYSC09
PTYSC12
PTYSC15
PTYSC18
PTYSC21
PTYSC24

DESIGN CONSIDERATIONS

- See block 10025 for frame kit to use with these baskets
- Wood with chrome railing and non-skid surface
- Nomenclature indicates cabinet width

HOW TO ORDER

- Specify **number** of baskets
- Pricing P-312

Cabinet Width	Basket Width
9"	5"
12"	8"
15"	11"
18"	14"
21"	17"
24"	20"

© Copyright StarMark Cabinetry FEBRUARY 2022

Block 10040 Shelving

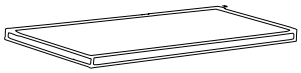

DESIGN CONSIDERATIONS

- ¾" thick hardwood plywood with birch melamine
- Shelves whose nomenclature begins with **SI** are finished veneer ¾" plywood
- All other shelves are melamine
- Shelf clips included
- Top, bottom and one long edge are finished unless otherwise specified

HOW TO ORDER

- To modify dimensions, use **ACMOD** in Block 9085. Specify dimensions in special info.
- Nomenclature reads Cabinet Depth x Cabinet Width
- This item is priced per shelf
- Specify **quantity** of shelves
- Pricing P-313

Shelves for 12" deep wall cabinets

SI12SK-12	**12SK-12**
SI12SK-15	**12SK-15**
SI12SK-18	**12SK-18**
SI12SK-21	**12SK-21**
SI12SK-24	**12SK-24**
SI12SK-27	**12SK-27**
SI12SK-30	**12SK-30**
SI12SK-33	**12SK-33**
SI12SK-36	**12SK-36**
SI12SK-39	**12SK-39**
SI12SK-42	**12SK-42**
SI12SK-45	**12SK-45**
SI12SK-48	**12SK-48**

Shelves for 21" deep base cabinets

SI21SK-12	**21SK-12**
SI21SK-15	**21SK-15**
SI21SK-18	**21SK-18**
SI21SK-21	**21SK-21**
SI21SK-24	**21SK-24**
SI21SK-27	**21SK-27**
SI21SK-30	**21SK-30**
SI21SK-33	**21SK-33**
SI21SK-36	**21SK-36**
SI21SK-39	**21SK-39**
SI21SK-42	**21SK-42**
SI21SK-45	**21SK-45**
SI21SK-48	**21SK-48**

Shelves for 24" deep base cabinets

SI24SK-12	**24SK-12**
SI24SK-15	**24SK-15**
SI24SK-18	**24SK-18**
SI24SK-21	**24SK-21**
SI24SK-24	**24SK-24**
SI24SK-27	**24SK-27**
SI24SK-30	**24SK-30**
SI24SK-33	**24SK-33**
SI24SK-36	**24SK-36**
SI24SK-39	**24SK-39**
SI24SK-42	**24SK-42**
SI24SK-45	**24SK-45**
SI24SK-48	**24SK-48**

Shelves for corner cabinets and end cabinets

SI12SK-AEW	**12SK-AEW**
SI12SK-AW	**12SK-AW**
SI24SK-DW	**24SK-DW**
SI24SK-BAC	**24SK-BAC**
SI24SK-AB	**24SK-AB**
SI24SK-AEB	**24SK-AEB**
SI27SK-DDW	**27SK-DDW**

Block 10050 ¾" Plywood Shelving

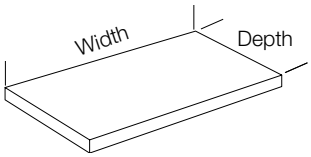

PS10 per foot
PS12 per foot
PSSQFT per square foot
(up to 48" D x 96" W)

DESIGN CONSIDERATIONS

- ¾" plywood shelf is edge banded
- 10" or 12" deep veneered plywood
- Use for open shelving
- Grain direction will follow width of shelf
- Top, bottom and one long edge are finished unless otherwise specified

HOW TO ORDER

- This item is priced per lineal foot
- Specify **width** of shelf
- Specify **edges** to be banded
- See block 12605 for finished sides and edges.
- When ordering special size shelves, specify **depth** by **width**
- Pricing P-313

Block 10060 Solid Wood Shelving

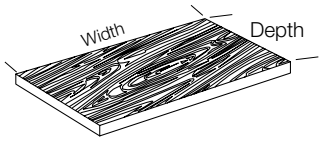

SS10 per foot
SS12 per foot
SSSQFT per square foot
(up to 12" D x 96" W)

DESIGN CONSIDERATIONS

- 10" or 12" deep solid wood
- ¾" thick
- Grain direction will follow width of shelf
- Use for open shelving
- Top, bottom and one long edge are finished unless otherwise specified

HOW TO ORDER

- This item is priced per lineal foot
- Specify **width** of shelf
- Specify **edges** to be finished
- See block 12605 for finished sides and edges.
- When ordering special size shelves, specify **depth** by **width**
- Pricing P-313

Block 10070 ¾" Plywood Plinth Shelf with Decorator Trim

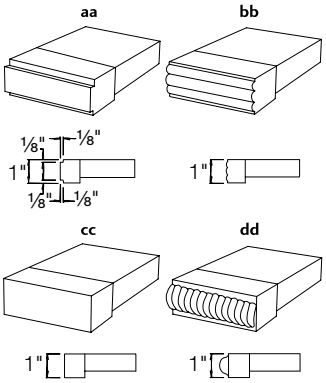

DESIGN CONSIDERATIONS

- ¾" plywood shelf with optional edges shown here
- Appropriate moulding attached to front edge of shelves
- Grain direction will follow width of shelf

HOW TO ORDER

- Priced per square foot
- To add to cabinet, specify **PSH** in Special Information section on order form
- Specify **Depth** by **Width**
- Specify decorative front edge (**aa, bb, cc, dd**) in Special Information section
- Pricing P-313

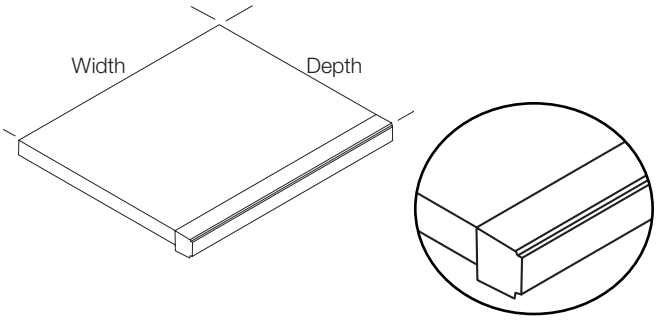

PSH per square foot

© Copyright StarMark Cabinetry FEBRUARY 2022

Block 10080 Furniture Frame Shelf with 1/4" Glass

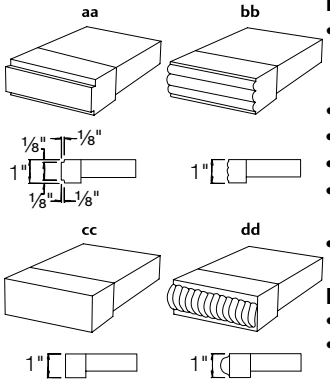

DESIGN CONSIDERATIONS

- ¾" solid stock with 1" front applied nosing X 1½" mitered frame, routed to accept ¼ " thick glass
- ¼" thick glass shelf included
- Minimum width is 9"
- Minimum depth is 9"
- Maximum dimension is 36" wide by 25" deep
- Not available with angled cabinets

HOW TO ORDER

- Priced per lineal foot
- To add to cabinet, specify **FPWS** in Special Information section on order form
- Specify **Depth** by **Width**
- Specify decorative front edge (**aa, bb, cc, dd**) in Special Information section
- Pricing P-313

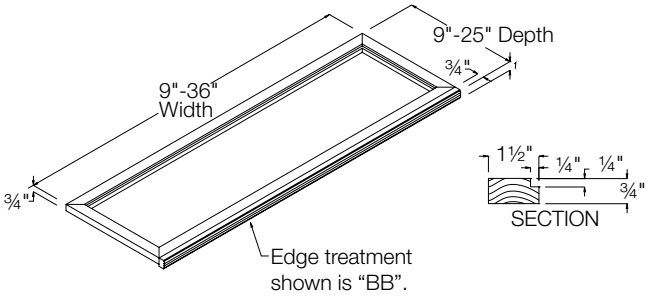

FPWS per foot

Block 10085 Wall Floating Shelf

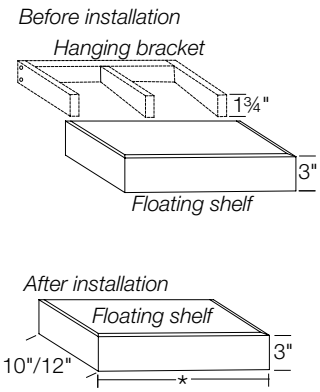

DESIGN CONSIDERATIONS

- 3" high shelf
- ¾" solid wood front and sides
- 10" or 12" deep
- Grain direction will follow width of shelf
- Floating shelf is reversible, one side has an ⅛" lip and one side is flush. Can be mounted with either side up.
- Includes hanging bracket to mount to wall studs
- Rated for 20 lbs. per foot
- Available in all wood species except for Rustic Alder and Rustic Hickory.
- Wood is stained to match cabinets
- Nomenclature lists width by depth. For example, WFS2410 is 24" wide by 10" deep.

HOW TO ORDER

- To modify dimensions, use **ACMOD** in Block 9085. Specify dimensions in special info.
- Pricing P-314

INSTALLATION TIP

- Secure shelf to back rail of hanging bracket with pins or screws.

WFS1810	**WFS1812**
WFS2110	**WFS2112**
WFS2410	**WFS2412**
WFS2710	**WFS2712**
WFS3010	**WFS3012**
WFS3310	**WFS3312**
WFS3610	**WFS3612**
WFS3910	**WFS3912**
WFS4210	**WFS4212**
WFS4510	**WFS4512**
WFS4810	**WFS4812**
WFS5110	**WFS5112**
WFS5410	**WFS5412**
WFS5710	**WFS5712**
WFS6010	**WFS6012**

Block 10090 Wall Spice Shelf

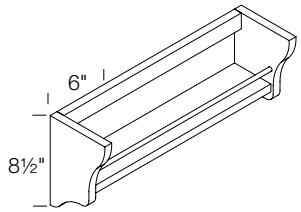

Cherry, Hickory, Maple, Oak, Walnut
WSS15
WSS18
WSS21
WSS24
WSS27
WSS30
WSS33
WSS36

DESIGN CONSIDERATIONS

- Wood is stained to match cabinets
- Use Cherry for Alder cabinetry
- Nomenclature indicates cabinet width

HOW TO ORDER

- To modify dimensions, use **ACMOD** in Block 9085. Specify dimensions in special info.
- Pricing P-314

© Copyright StarMark Cabinetry FEBRUARY 2022

Block 10100 Stem Glass Rack and Wine Shelf

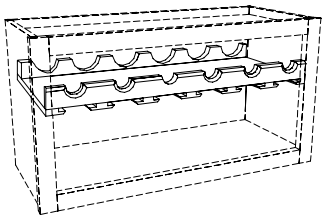

Cherry, Hickory, Maple, Oak, Walnut
SGSW24
SGSW27
SGSW30
SGSW33
SGSW36

DESIGN CONSIDERATIONS
- 24" holds 4 bottles
- 27" holds 4 bottles
- 30" holds 5 bottles
- 33" holds 5 bottles
- 36" holds 6 bottles
- The openings are spaced to accommodate stemware with a maximum of a 3¼" diameter bowl
- Use Cherry for Alder cabinetry
- Wood is stained to match cabinets
- Shelf is adjustable

HOW TO ORDER
- To modify dimensions, use **ACMOD** in Block 9085. Specify dimensions in special info.
- Pricing P-314

INSTALLATION TIP
To be installed inside of cabinet without doors

Block 10110 Wine Rack Shelf

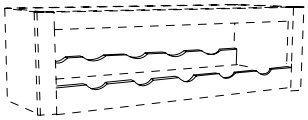

Cherry, Hickory, Maple, Oak, Walnut
WRS24
WRS27
WRS30
WRS33
WRS36

DESIGN CONSIDERATIONS
- 2¼" high X 10½" deep
- 24" holds 4 bottles
- 27" holds 4 bottles
- 30" holds 5 bottles
- 33" holds 5 bottles
- 36" holds 6 bottles
- Use Cherry for Alder cabinetry
- Solid wood is stained to match cabinets

HOW TO ORDER
- To modify dimensions, use **ACMOD** in Block 9085. Specify dimensions in special info.
- Pricing P-314

INSTALLATION TIP
To be installed inside of cabinet without doors

Block 10120 Stem Glass Rack

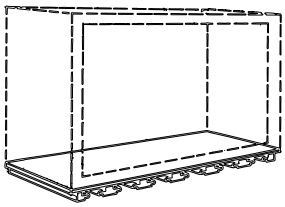

Cherry, Hickory, Maple, Oak , Walnut
SGR24
SGR27
SGR30
SGR33
SGR36

DESIGN CONSIDERATIONS
- Solid wood
- The openings are spaced to accommodate stemware with a maximum of a 3¼" diameter bowl
- Use Cherry for Alder cabinetry.
- If you are using this item with the **WW** and **WXW** cabinets in blocks 2103 and 2110, you need to specify a 2⅝" bottom rail on those cabinets.
- Bottom edges of cabinet end panels and back panel will not be finished. For finished edges, contact Technical Assistance.

HOW TO ORDER
- To modify dimensions, use **ACMOD** in Block 9085. Specify dimensions in special info.
- Pricing P-314

INSTALLATION TIP
Installed under cabinet between end panels

Block 10130 Chopping Block

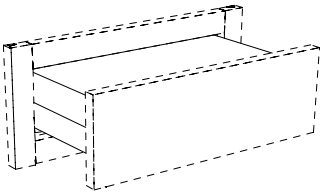

CB15
CB18
CB21
CB24

DESIGN CONSIDERATIONS
- 1½" thick solid maple
- 100 lb. glide capacity
- Depth modifications not allowed on cabinets with chopping block
- Chopping block is removable

HOW TO ORDER
- Nomenclature indicates cabinet width, not drawer width
- Write **CB___** on the line underneath the cabinet that will receive the chopping block
- Specify which drawer will receive the chopping block
- To modify dimensions, use **ACMOD** in Block 9085. Specify dimensions in special info.
- Pricing P-314

Block 10140 Bread Board

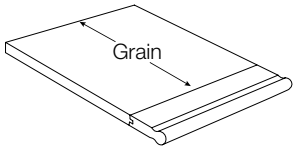

BB12
BB15
BB18
BB21
BB24

DESIGN CONSIDERATIONS
- Solid maple board with wood front
- Wood front strip is stained to match cabinets
- Treated with vegetable oil before it's shipped.

HOW TO ORDER
- Write **BB___** on the line underneath the cabinet to receive the bread board
- To modify dimensions, use **ACMOD** in Block 9085. Specify dimensions in special info.
- Nomenclature indicates cabinet width, not drawer width
- Pricing P-314

Block 10150 Spice Rack for Base with Mini Pantry

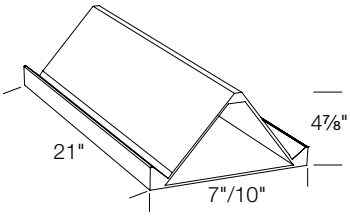

BFPSR12
BFPSR15

DESIGN CONSIDERATIONS
- Fits BFP12 and BFP15 block 3990
- Does not fit BFPSC
- Fits over top shelf of BFP
- Angled for easy spice access
- Maple spice rack with a Natural finish

HOW TO ORDER
- Pricing P-314

Block 10160 Wood Spice Rack Organizer

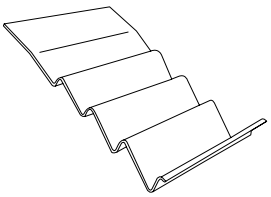

DSRW18
DSRW24

DESIGN CONSIDERATIONS
- Wood rack
- Can be used in 24" deep bases
- Large spice containers will not fit in this rack, if used in a 4½" high drawer opening.

HOW TO ORDER
- Nomenclature indicates cabinet width, not drawer width
- To modify dimensions, use **ACMOD** in Block 9085. Specify dimensions in special info.
- Pricing P-314

© Copyright StarMark Cabinetry FEBRUARY 2022

Block 10170 Drawer Spice Rack

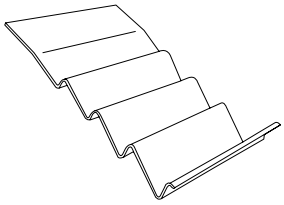

DSR15
DSR18
DSR21
DSR24

DESIGN CONSIDERATIONS
- White plastic
- Can be used with 24" deep and 21" deep bases
- Large spice containers will not fit in this rack, if used in a 4½" high drawer opening.

HOW TO ORDER
- Nomenclature indicates cabinet width, not drawer width
- To modify dimensions, use **ACMOD** in Block 9085. Specify dimensions in special info.
- Pricing P-315

Block 10180 Range Mate Kit

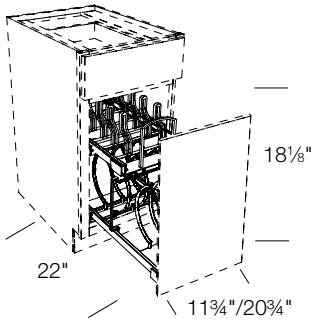

RMK15
RMK24
RMDRKT

DESIGN CONSIDERATIONS
- Fits B15 and B24
- Two-tier chrome plated wire rack
- RMK15 top rack holds up to seven lids
- RMK24 top rack holds up to 12 lids
- Bottom rack is adjustable to hold pots and pans of many sizes
- Full extension glides
- RMDRKT includes brackets to attach the rack to cabinet door for a slide out unit.
- Kit dimensions listed on drawing

HOW TO ORDER
- Pricing P-315

Block 10190 Plastic Cutlery Divider

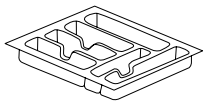

PCD18
PCD24

DESIGN CONSIDERATIONS
- Gray colored plastic cutlery divider with floor
- PCD18 has 6 compartments
- PCD24 has 7 compartments
- Can be used in 24" deep bases

HOW TO ORDER
- Nomenclature indicates cabinet width, not drawer width
- Pricing P-315

Block 10200 Cutlery Tiered Rack

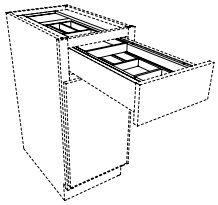

CTR15
CTR18
CTR21
CTR24
CTR30
CTR36

DESIGN CONSIDERATIONS
- ½" solid wood cutlery divider
- Top drawer rack slides back into cabinet
- Can be used in 24" deep bases
- No modifications

HOW TO ORDER
- Nomenclature indicates cabinet width, not drawer width
- Pricing P-315

Block 10202 Beverage Pod Tiered Rack

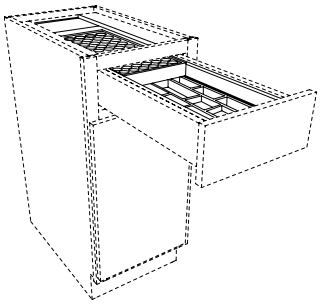

KCUPTR18

DESIGN CONSIDERATIONS
- ½" solid wood divider
- Top rack slides back into cabinet to reveal storage beneath
- Top drawer rack holds 40 beverage pods
- Can be used in 24" deep bases

HOW TO ORDER
- Nomenclature indicates cabinet width, not drawer width
- Pricing P-315

Block 10204 Single Vanity Drawer Organizer

NEW!

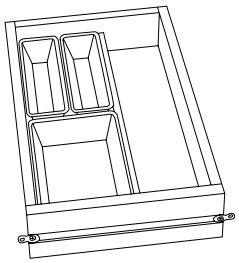

VDRWVD12
VDRWVD15
VDRWVD18

DESIGN CONSIDERATIONS
- ⅝" thick maple drawer box with undermount full extension drawer glides
- Drawer box is 18 11/16" deep x 4 5/16" high. See width in chart below.
- Clear bins for organizing drawer contents, see chart below
- Non-slip liner in bottom of drawer

Organizer	Width	Bins Included
VDRWVD12	9"	2 small
VDRWVD15	12"	2 small, 1 large
VDRWVD18	15"	4 small, 1 large

HOW TO ORDER
- Pricing P-315

Block 10205 Tiered Vanity Drawer Organizer

NEW!

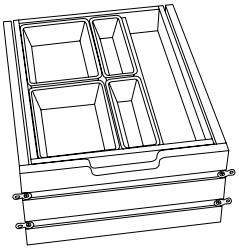

VDRWVDT12
VDRWVDT15
VDRWVDT18

DESIGN CONSIDERATIONS
- ⅝" thick maple drawer box with undermount full extension drawer glides
- Drawer box is 18 11/16" deep x 8" high. See width in chart below.
- Clear bins for organizing drawer contents, see chart below
- Top tier slides back into cabinet to reveal contents below
- Non-slip liner in bottom of drawer and tiered portion

Organizer	Width	Bins Included
VDRWVDT12	9"	2 small
VDRWVDT15	12"	2 small, 1 large
VDRWVDT18	15"	2 small, 2 large

HOW TO ORDER
- Pricing P-315

© Copyright StarMark Cabinetry FEBRUARY 2022

Block 10206 Half Tiered Vanity Drawer Organizer

NEW! I

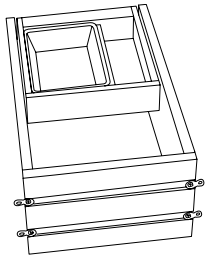

VDRWVDHT12
VDRWVDHT15
VDRWVDHT18

DESIGN CONSIDERATIONS

- 5/8" thick maple drawer box with undermount full extension drawer glides
- Drawer box is 18 11/16" deep x 8" high. See width in chart below.
- Clear bins for organizing drawer contents, see chart below
- Top tier slides back into cabinet to reveal contents below
- Non-slip liner in bottom of drawer and tiered portion

Organizer	Width	Bins Included
VDRWVDHT12	9"	1 small
VDRWVDHT15	12"	1 large
VDRWVDHT18	15"	1 small, 1 large

HOW TO ORDER

- Pricing P-315

Block 10210 Cutlery Expandable Rack

I

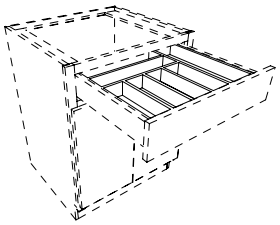

CER1824
CER2736

DESIGN CONSIDERATIONS

- 1/2" solid wood cutlery divider
- 1824 fits cabinets 18-24" wide
- 2736 Fits cabinets 27-36" wide
- Extension piece needs to be cut down on the job site
- Can be used in 24" deep bases

HOW TO ORDER

- Nomenclature indicates cabinet width, not drawer width
- Pricing P-315

Block 10220 All-Wood Drawer Organizers

I

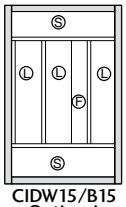

CIDW15/B15
Option A

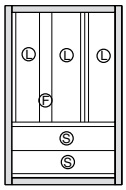

CIDW15/B15
Option B

Long Divider Ⓛ
Short Divider Ⓢ
Filler Divider Ⓕ

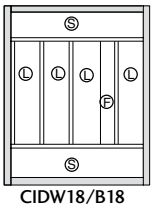

CIDW18/B18
Option A

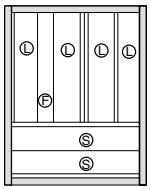

CIDW18/B18
Option B

Long Divider Ⓛ
Short Divider Ⓢ
Filler Divider Ⓕ

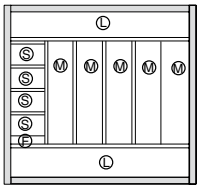

CIDW24/B24
Option A

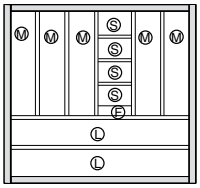

CIDW24/B24
Option B

Long Divider Ⓛ
Medium Divider Ⓜ
Short Divider Ⓢ
Filler Divider Ⓕ

CIDW15
CIDW18
CIDW24

DESIGN CONSIDERATIONS

- 1/2" solid wood adjustable cutlery divider box with floor
- Unit can be removed from drawer

HOW TO ORDER

- Nomenclature indicates cabinet width, not drawer width
- Pricing P-316

INSTALLATION TIP

- Let homeowners know that compartments can be re-arranged to fit their storage needs.
- Just a few possible configurations are shown here.

© Copyright StarMark Cabinetry FEBRUARY 2022

Block 10221 Fineline Cutlery Insert

NEW!

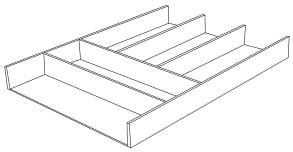

FLCUTINSB
FLCUTINSW

DESIGN CONSIDERATIONS

- Birch (B) or Walnut (W) drawer insert
- Coordinates with blocks 10222-10224

Insert	Size
FLCUTINS_	11 13/16" x 16 11/16" x 1 15/16"
FLMTIPINS_	6" x 16 11/16" x 1 15/16"
FLCUTEX24_	23 5/8" w x trim on job site
FLCUTEX48_	47 1/4" w x trim on job site

HOW TO ORDER

- Pricing P-316

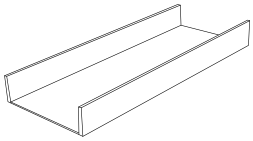

FLMTIPINSB
FLMTIPINSW

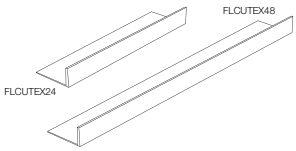

FLCUTEX24B
FLCUTEX24W
FLCUTEX48B
FLCUTEX48W

Block 10222 Fineline Cutlery Box

NEW!

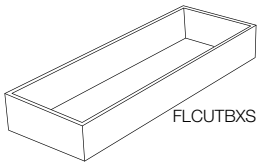

DESIGN CONSIDERATIONS

- Birch (B) or Walnut (W) drawer insert box
- Coordinates with blocks 10221-10224

Insert	Size
FLCUTBXS_	4 1/8" x 11 13/16" x 1 15/16"
FLCUTBXL_	8 5/16" x 11 13/16" x 1 15/16"

HOW TO ORDER

- Pricing P-316

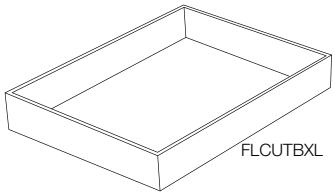

FLCUTBXSB
FLCUTBXSW
FLCUTBXLB
FLCUTBXLW

Block 10223 Fineline Cutlery Box Deep

NEW!

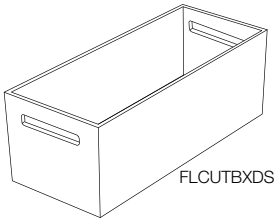

DESIGN CONSIDERATIONS

- Birch (B) or Walnut (W) drawer insert box
- Coordinates with blocks 10221-10224

Insert	Size
FLCUTBXS_	4 1/8" x 11 13/16" x 4 3/4"
FLCUTBXL_	8 5/16" x 11 13/16" x 4 3/4"

HOW TO ORDER

- Pricing P-316

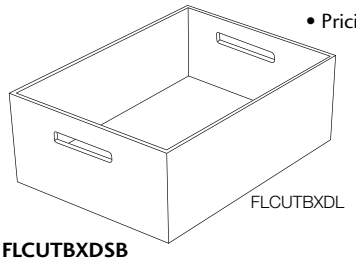

FLCUTBXDSB
FLCUTBXDSW
FLCUTBXDLB
FLCUTBXDLW

Block 10224 Fineline Drawer Liner

NEW!

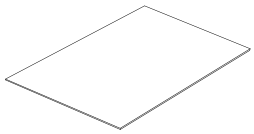

FLDRWLING

DESIGN CONSIDERATIONS

- Measures 19 3/4" x 46 1/16"
- Trim on job site
- Coordinates with blocks 10221-10224
- Umbra gray color

HOW TO ORDER

- Pricing P-316

© Copyright StarMark Cabinetry FEBRUARY 2022

Block 10225 Cutlery Wood Organizers

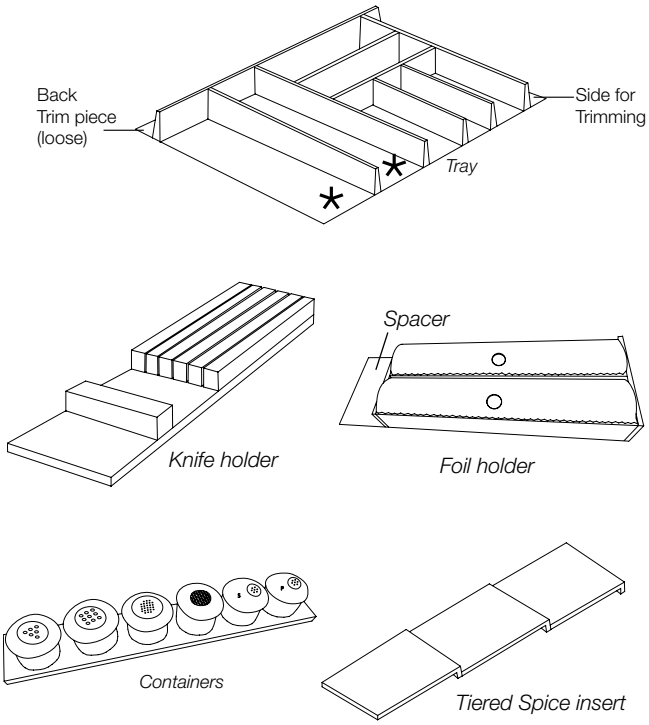

DESIGN CONSIDERATIONS

- Birch or walnut drawer inserts and accessories
- Inserts have slim tapered dividers to save space
- Accessories not available without tray
- Tray includes (loose) back piece. Trim to fit.
- Tiered spice insert shipped in three pieces.
- Foil holder includes loose spacer.
- Each tray can hold up to two accessories in the openings marked with ∗.

HOW TO ORDER

- Order tray and then optional inserts
- Pricing P-316

INSTALLATION TIP

- Trim to fit on job site.

Birch	Walnut	
CWOTB36	**CWOTW36**	Tray

Birch	Walnut	
CWOKB	**CWOKW**	Knife holder
CWOFB	**CWOFW**	Foil holder
CWOCB	**CWOCW**	Containers
CWOSB	**CWOSW**	Spice shelf

Block 10230 Cutlery Divider Box

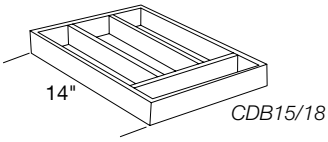

CDB15
CDB18

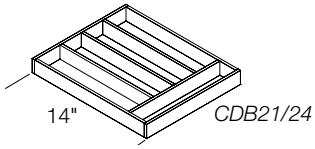

CDB21
CDB24

DESIGN CONSIDERATIONS

- ½" solid wood cutlery divider box with floor
- Unit can be removed from drawer
- Two units can be stacked in 6" high drawer
- CDB15 and CDB18 have 4 compartments
- CDB21 and CDB24 have 5 compartments

HOW TO ORDER

- Nomenclature indicates cabinet width, not drawer width
- To modify dimensions, use **ACMOD** in Block 9085. Specify dimensions in special info.
- Pricing P-316

Block 10240 Cutlery Divider

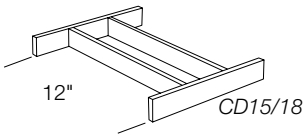

CD15
CD18

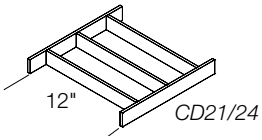

CD21
CD24

DESIGN CONSIDERATIONS

- ½" solid maple

HOW TO ORDER

- Nomenclature indicates cabinet width, not drawer width
- To modify dimensions, use **ACMOD** in Block 9085. Specify dimensions in special info.
- Pricing P-317

Block 10250 Cutlery Wood Rack

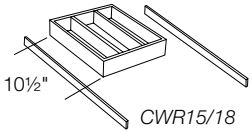

CWR15
CWR18

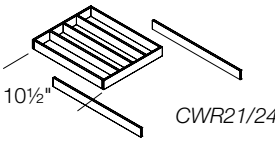

CWR21
CWR24

DESIGN CONSIDERATIONS

- ½" solid wood cutlery box with wood glides
- Wood box slides on wood glides to expose lower utensil space

HOW TO ORDER

- Nomenclature indicates cabinet width, not drawer width
- To modify dimensions, use **ACMOD** in Block 9085. Specify dimensions in special info.
- Pricing P-317

Block 10260 Sliding Towel Bar Kit

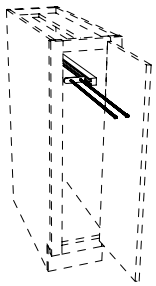

STBK

DESIGN CONSIDERATIONS

- 2 towel bars on a slide-out track for access

HOW TO ORDER

- Specify which **side of cabinet** STBK is to be installed **STBKL** (left) or **STBKR** (right). Illustration shows RIGHT.
- Pricing P-317

© Copyright StarMark Cabinetry FEBRUARY 2022

Block 10265 Sink Base Caddy

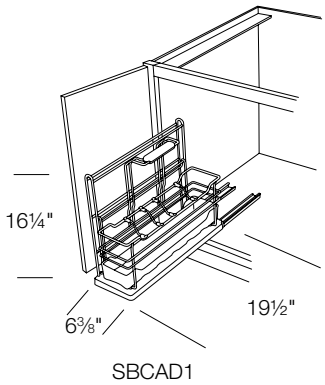

DESIGN CONSIDERATIONS

- Mounts to floor of cabinet
- Chrome wire frame with translucent plastic trays
- Full extension glides with soft close
- Removable baskets with carrying handle
- SBCAD1 has one basket, SBCAD3 has three baskets
- Upper basket on SBCAD3 tilts to either side for access to baskets underneath
- SBCAD1 minimum cabinet width is 12"
- SBCAD3 minimum cabinet width is 15"

HOW TO ORDER

- Nomenclature indicates number of baskets
- Pricing P-317

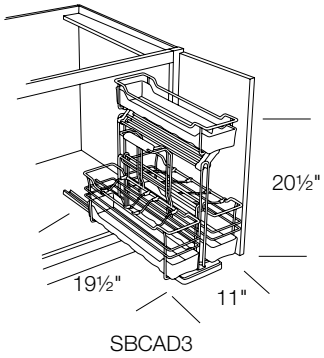

SBCAD1
SBCAD3

Block 10266 L Shaped Vanity Organizer

NEW!

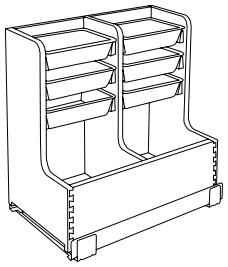

DESIGN CONSIDERATIONS

- Dovetailed wood bottom-mount L-shaped organizer with full extension glides
- 18 11/16" deep x 4 5/16" high. See width in chart below.
- Clear bins for organizing drawer contents, see chart below
- Non-slip liner in bottom of organizer

Organizer	Width	Bins Included
VOVSBSC12	8¾"	6 small
VOVSBSC15	11 11/16"	6 large

HOW TO ORDER

- Pricing P-317

VOVSBSC12
VOVSBSC15

Block 10270 Drawer Front Bins

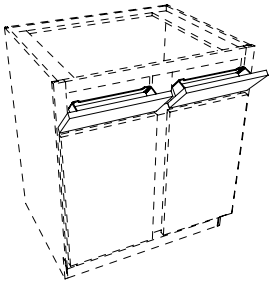

2DFB10
1DFB12
2DFB12
1DFB14
2DFB14
1DFB19
2DFB19

DESIGN CONSIDERATIONS

- Stainless steel bin works with most undermount sinks.
- Soft close hinges on drawer front bins
- "2" denotes a pair
- Bin measures 3" at back, 1.5" at front; and is 2" deep

Dwr Front Bins	Fits Cabinet
2DFB10	SRB30
1DFB12	SRB18, DCSB36
2DFB12	2SRB30, SRB33 SRB36
1DFB14	SRB21
2DFB14	2SRB33, 2SRB36 SRB39, SRB42 SRB45
1DFB19	DCSB42, SRB24 2SRB27
2DFB19	SRB48

HOW TO ORDER

- Nomenclature indicates cabinet width, not drawer width
- Pricing P-317

INSTALLATION TIP

Verify bowl size to ensure bins will function properly

Block 10280 Bread Liner

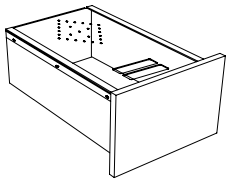

BL15
BL18
BL21
BL24

DESIGN CONSIDERATIONS

- Translucent plastic bread cover with tracks
- Mounts on top of drawer
- Minimum drawer opening height is 6"

HOW TO ORDER

- Nomenclature indicates cabinet width, not drawer width
- Write **BL___** on the line underneath the cabinet to receive the bread liner
- Specify which drawer will receive the bread liner
- Pricing P-317

© Copyright StarMark Cabinetry FEBRUARY 2022

Block 10290 Drawer Organizer

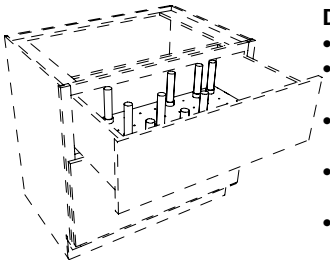

	Width	Number of Pegs
DPEG24	24¼"	9
DPEG30	30¼"	12
DPEG36	36¼"	16
DPEGSET		4

DPEG24
DPEG30
DPEG36
DPEGSET

DESIGN CONSIDERATIONS

- Cabinet must be 24", 30" or 36" wide
- Kit includes peg board and push-in pegs
- Peg board with solid maple pegs with a natural finish
- Pegs boards are 21¼" deep. See chart for width.
- Additional pegs can be ordered in sets of four
- Minimum drawer opening height is 8"
- Peg holes are spaced every 2½".
- Pegs are 6⅝" tall

HOW TO ORDER

- Write **DPEG** and quantity of drawers to receive drawer organizer on the line underneath the cabinet on the Order Form.
- Write **DPEGSET** on a separate line for set of additional 4 pegs.
- Nomenclature indicates cabinet width, not drawer width
- Pricing P-317

Block 10291 Drawer Peg Pan and Lid Storage

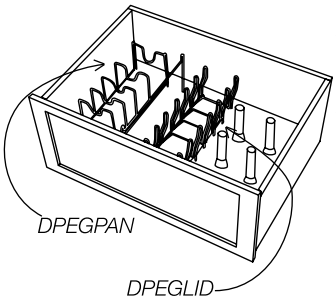

DPEGPAN
DPEGLID

DESIGN CONSIDERATIONS

- DPEGPAN kit includes chrome push-in adjustable pan rack, compatible with DPEG peg board
- DPEGPAN holds up to five pots and pans
- DPEGLID kit includes chrome push-in lid rack, compatible with DPEG peg board
- DPEGLID holds up to six lids

HOW TO ORDER

- DPEGPAN and DPEGLID ordered separately.
- Peg board purchased separately. See block 10290 for DPEG_ peg board.
- Pricing P-317

Block 10293 Base Plastic Ware Storage Kit

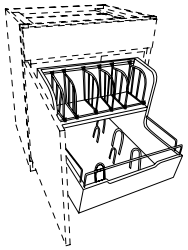

BPSK18
BPSK24

DESIGN CONSIDERATIONS

- Fits B18 and B24
- Kit installs in cabinet, behind door
- Storage unit pulls out of cabinet opening
- Upper area holds lids for plastic containers
- Lower area holds plastic containers
- Chrome dividers in lid area are adjustable

HOW TO ORDER

- Pricing P-317

Block 10300 Wall Lazy Susan Kit

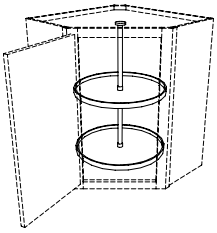

Cabinet Height	# of trays	Use lazy susan kit
30"	2	LSK220
36"	2	LSK220
42"	3	LSK320

LSK220
LSK320

DESIGN CONSIDERATIONS

- White polymer
- Fits 24" Diagonal Walls and Peninsula Diagonal Walls
- 18" diameter turntable

HOW TO ORDER

- Pricing P-318

Block 10310 Chrome/Wood Turntable

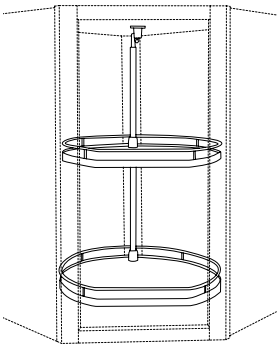

DWWLP30
DWWLP36
DWWLP42
DWWL20TT

DESIGN CONSIDERATIONS

- DWWLP__ is a twister pole to use with cabinets 30", 36" and 42" high
- DWWL20TT is a 20" D-shaped wood turntable with a chrome railing

HOW TO ORDER

- Specify the quantity of turntables and choose the appropriate pole based on cabinet height.
- Pricing P-318

INSTALLATION TIP

Secure bottom turntable to pole before installing

© Copyright StarMark Cabinetry FEBRUARY 2022

Block 10320 SSW Shelf Kits

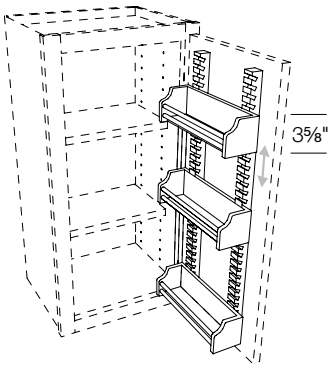

SSWPL30 Pilasters for 30"
SSWPL36 Pilasters for 36"
SSWPL42 Pilasters for 42"
SSWSH15 Spice shelf for 15"
SSWSH18 Spice shelf for 18"
SSWSH21 Spice shelf for 21"
SSWSH24 Spice shelf for 24"

DESIGN CONSIDERATIONS

- Spice shelves are 3" deep. Inside capacity is 2¼".
- Spice shelves are adjustable up and down.

HOW TO ORDER

- Order a pair of pilasters to install on the back of the door. See chart below.
- Order the spice shelves. See charts below for how many spice shelves the cabinet can hold (based on cabinet height), and which spice shelves to order (based on cabinet width).
- Pricing P-318

Cabinet Height	Maximum # of spice shelves	Use pilaster set
30"	6	SSWPL30
36"	7	SSWPL36
42"	9	SSWPL42

Cabinet Width	Use spice shelf
15"	SSWSH15
18"	SSWSH18
21"	SSWSH21
24"	SSWSH24

Block 10321 Wall Pull Down Pantry Single Shelf Kit

NEW!

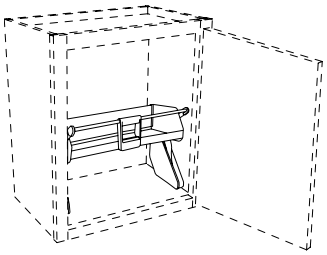

WPDS21
WPDS24
WPDS27
WPDS30
WPDS33
WPDS36

DESIGN CONSIDERATIONS

- Pull down pantry unit with single shelf and handle
- Cabinet must have end panels shifted to the outside frame edge.

HOW TO ORDER

- Pricing P-318

INSTALLATION TIP

- Installation instructions and template posted on OneTouch in the Product Info + Resources section.

NOTES/CAUTION

- Inset concealed hinges not available.

Block 10322 Wall Pull Down Pantry Double Shelf Kit

NEW!

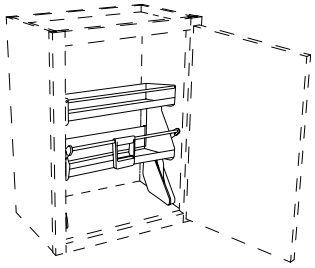

WPDD21
WPDD24

DESIGN CONSIDERATIONS

- Pull down pantry unit with double shelf and handle
- Cabinet must have end panels shifted to the outside frame edge.

HOW TO ORDER

- Pricing P-318

INSTALLATION TIP

- Installation instructions and template posted on OneTouch in the Product Info + Resources section.

NOTES/CAUTION

- Inset concealed hinges not available.

Block 10323 Over Appliance Pull Out (Left and Right Installation)

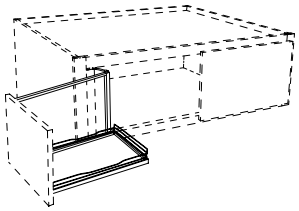

OAPOR
OAPOL

DESIGN CONSIDERATIONS

- Mounts to interior end panels of cabinet
- Attaches to cabinet door
- Chrome wire rails and trays
- Minimum opening height of 15"
- Fits 24" deep wall cabinet
- Fits 33" wide and wider wall cabinet
- This accessory works best when adjacent cabinets are the same depth.

HOW TO ORDER

- Pricing P-318

Block 10325 Door Mount Aluminum Foil Rack Holder

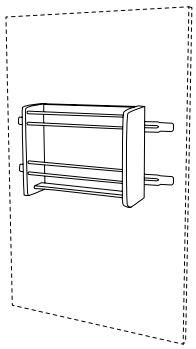

DFR15
DFR18
DFR21

DESIGN CONSIDERATIONS

- Holds aluminum foil, plastic wrap, wax paper containers
- Mounts to back of door
- Door rack is wood with chrome railing

HOW TO ORDER

- Pricing P-318

Cabinet Width	Use foil door rack
15"	DFR15
18"	DFR18
21"	DFR21

Block 10326 Vanity Door Mounted Storage Rack

NEW!

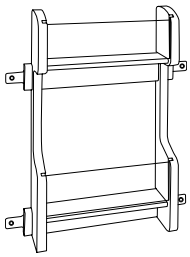

VDRVSR12
VDRVSR15
VDRVSR24

DESIGN CONSIDERATIONS

- Wood rack that attaches to cabinet door
- 3⅛" deep x 15½" high. See width in chart below.
- Two wood non-slip lined shelves with clear plexi fronts

Rack	Width
VDRVSR12	8¼"
VDRVSR15	11¼"
VDRVSR24	20¼"

HOW TO ORDER

- Pricing P-318

© Copyright StarMark Cabinetry FEBRUARY 2022

Block 10330 Base Mini Pantry Kit

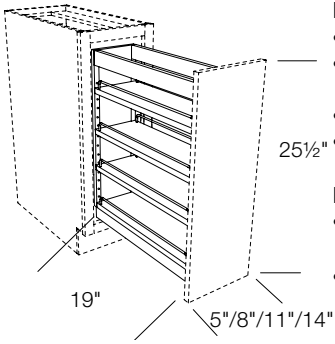

BFPK09
BFPK12
BFPK15
BFPK18

DESIGN CONSIDERATIONS

- Pull out pantry that attaches to door
- Wood and chrome pantry with one fixed shelf and three adjustable shelves
- Nomenclature indicates cabinet width
- Kit dimensions listed on drawing

HOW TO ORDER

- See block 10150 for optional spice rack
- Pricing P-319

Block 10332 Base Pantry with OXO Storage Kit

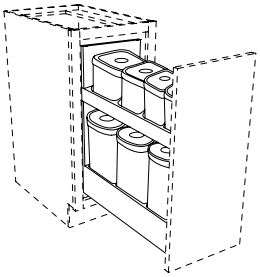

BPOXOK12

DESIGN CONSIDERATIONS

- Fits BF12
- Pull out pantry that attaches to door
- Includes soft close
- Wood unit with adjustable shelves
- Upper shelf includes four small OXO containers
- Lower shelf includes 3 large OXO containers
- OXO is a well known, high quality storage and organization brand

HOW TO ORDER

- Pricing P-319

Block 10334 Vanity Pull Out Kit

NEW!

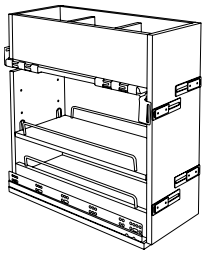

VBPOKIT12

DESIGN CONSIDERATIONS

- 8" wide 18 13/16" deep x 19 7/8" high
- Wood pull out attaches to cabinet door
- One fixed wood shelf and one adjustable wood shelf with chrome railings
- Storage area with wood dividers at top of unit

HOW TO ORDER

- Optional Acrylic Tray in block 10336
- Pricing P-319

This icon indicates that this product is illustrated in the Products in Color Section.

This icon indicates that this product is available in Inset Cabinetry

Block 10335 Grooming Kit

NEW!

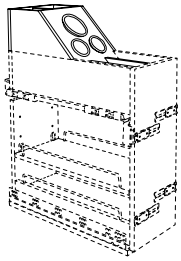

VBPOGKIT

DESIGN CONSIDERATIONS

- Designed to fit on top of Vanity Pull Out Kit in block 10334
- Three round stainless steel bins store hot styling tools, like flat irons, curling irons and blow dryers
- Storage area with wood dividers at top of unit

HOW TO ORDER

- Pricing P-319

Block 10336 Acrylic Tray

NEW!

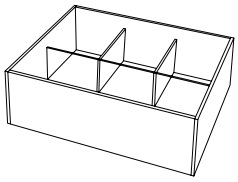

VBPOTKIT

DESIGN CONSIDERATIONS

- Designed to fit on top of Vanity Pull Out Kit in block 10334
- Clear acrylic vanity tray
- Three small openings and one large opening

HOW TO ORDER

- Pricing P-319

Block 10350 Heavy Duty Pull Out TV Swivel Shelf

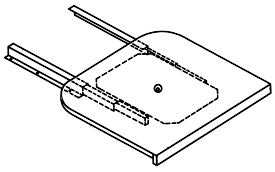

HDPOTVS

DESIGN CONSIDERATIONS

- **Load bearing capacity 220 lbs**
- 360 degree rotation swivel
- Ball bearing glide
- Shelf will extend out 14" at farthest point
- Wood shelf added to swivel unit matches interior
- When factory installed, cabinet will have ¾" thick floor and a minimum of 2" bottom rail
- Allow 3" for height
- Recommend for TV's up to 36" diagonal in size
- Available on 21" and 24" deep cabinets

HOW TO ORDER

- Specify **depth and width of cabinet** that the swivel shelf will be installed in.
- Specify a Finished Veneer Interior (block 9480) for the cabinet receiving this shelf.
- Pricing P-319

INSTALLATION TIP

If the swivel shelf will be field installed, reinforce the floor of the cabinet to a minimum of ¾" thick.

© Copyright StarMark Cabinetry FEBRUARY 2022

Block 10380 Swing-out Shelf Kit for Blind Corner

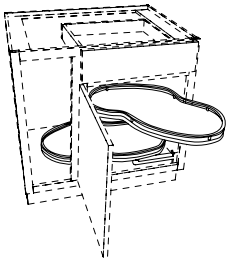

SOS48K

DESIGN CONSIDERATIONS
- Shelves are wood with chrome rails and have non-skid surface
- Two wood/chrome shelves individually swing out through opening
- SOS48K fits BC48

HOW TO ORDER
- Specify **Void Left** or **Void Right**
- Pricing P-319

Block 10390 Frame Kit for BCPTY

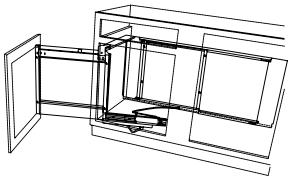

Illustration shows Void Right
BCPTYFRVL
BCPTYFRVR

DESIGN CONSIDERATIONS
- See block 10030 for baskets to use with this system

HOW TO ORDER
- Order **VR** for a void on the right side of the cabinet
- Order **VL** for a void on the left side of the cabinet
- BCPTYFR fits BC45 and BC48
- Pricing P-319

Block 10400 Revolving Slide Out Shelf Kit for Square Corner

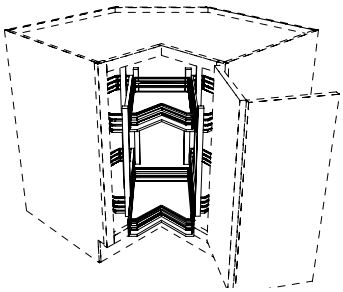

SRSSK

DESIGN CONSIDERATIONS
- Two wood/silver shelves pull out for easy access
- Unit rotates back and forth to access 4 adjustable side mount baskets
- SRSSK fits SBC36

HOW TO ORDER
- Pricing P-319

Block 10410 Knife Block

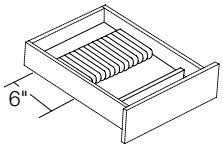

KNB12
KNB15
KNB18

DESIGN CONSIDERATIONS
- Wood with ⅛" slots 1" apart
- Divider serves as handle stop and forms compartment at front of drawer
- Unit is removable

HOW TO ORDER
- To modify dimensions, use **ACMOD** in Block 9085. Specify dimensions in special info.
- Pricing P-319

Cabinet Width	Number of Slots
12"	5
15"	9
18"	12

Block 10420 Recycle Base Kit

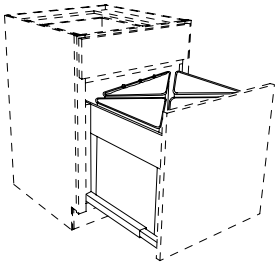

RCBK24

DESIGN CONSIDERATIONS
- Kit includes 3 poly bins and and 1 canvas bin on full extension slide
- Fits B24
- Poly bin = 25 qt.
- Canvas bin = 18 qt.

HOW TO ORDER
- Pricing P-320

NOTES/CAUTION
- Base cabinet must have a full height door for clearance.

Block 10440 Spice Shelf Kit

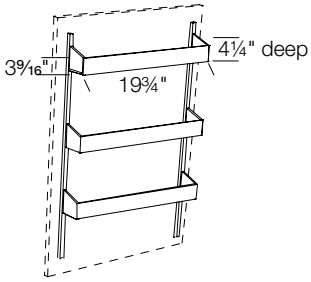

DSK318
DSK324

DESIGN CONSIDERATIONS
- Includes 3 adjustable white plastic shelves and metal pilasters
- Shipped loose
- Shelves are adjustable up and down
- DSK318 fits W18___
- DSK24 fits W24___

HOW TO ORDER
- Pricing P-320

Block 10450 Pantry Storage Kit

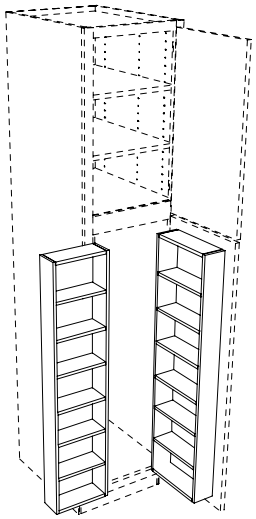

PSK18

DESIGN CONSIDERATIONS
- PSK18 fits UB18
- See block 10040 (12SK__) for optional shelves
- Not available in flat panel door styles
- Proper operation requires a door swing of 106 degrees. To achieve that, use a filler if you place this cabinet next to a wall

HOW TO ORDER
- Pricing P-320

NOTES/CAUTION
- Not available on inset cabinets with concealed hinges.

© Copyright StarMark Cabinetry FEBRUARY 2022

Block 10460 Utility Door Shelf Kit

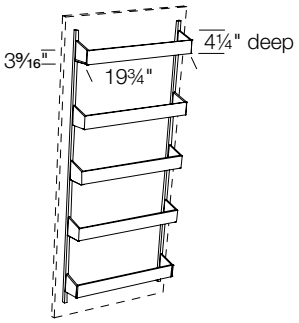

DSK518
DSK524

DESIGN CONSIDERATIONS
- Includes 5 adjustable white plastic shelves and metal pilasters
- Shipped loose

HOW TO ORDER
- Pricing P-320

Block 10470 Pantry Lazy Susan Kit

Standard Kit

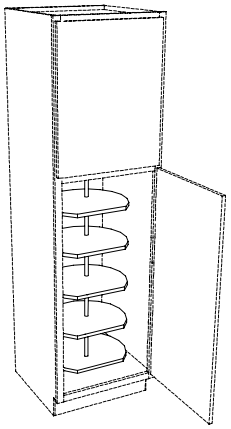

with optional shelves

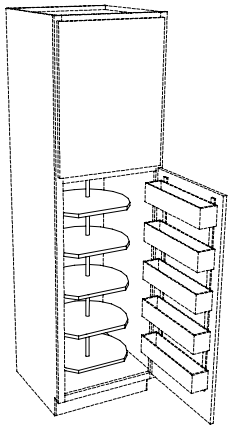

LSK520

DESIGN CONSIDERATIONS
- Fits UB24 (block 5010)
- 5 adjustable poly turntables
- See block 10460 (DSK) for optional door shelves

HOW TO ORDER
- Pricing P-320

Block 10475 Lavido Pantry Kit w/ Shelves

NEW!

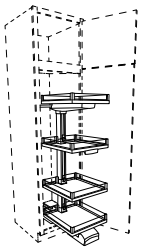

UPLAV21KIT
UPLAV24KIT

DESIGN CONSIDERATIONS
- Pull out pantry with 18½" deep shelves
- Includes four adjustable chrome and plexi shelves with non-skid surface

Cabinet Width	Opening Width	Shelf Width
21"	18"	15¾"
24"	21"	18¾"

HOW TO ORDER
- Pricing P-320

Block 10480 Tray Divider

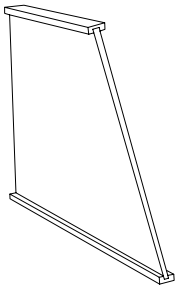

TD

DESIGN CONSIDERATIONS
- Fits full height door cabinets and standard base cabinets
- Can also be used in 24" deep wall cabinets
- Opening height of cabinet must be a minimum of 15"
- If used in standard base, shelf is omitted.
- Slides on wood track

HOW TO ORDER
- Pricing P-320

Block 10490 Roll Out Tray Divider

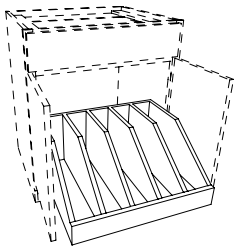

RTTD12
RTTD15
RTTD18
RTTD21
RTTD24
RTTD27
RTTD30
RTTD33
RTTD36

DESIGN CONSIDERATIONS
- 12" has one section (no dividers)
- 15", 18", 21", 24" have three sections
- 27", 30", 33", 36" have five sections
- Floor mounted full extension glides

HOW TO ORDER
- To modify dimensions, use **ACMOD** in Block 9085. Specify dimensions in special info.
- Pricing P-320

Block 10500 Folding Step

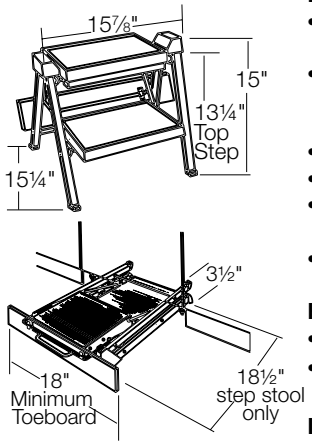

FS18

DESIGN CONSIDERATIONS
- Fits 18" wide base cabinet that is 21" or 24" deep.
- Increase cabinet width to 18½" or wider to accommodate folding step in ¾" construction.
- Upright position - 13¾" to top step
- Finished toe board is sent loose
- Folding step is fitted with a safety lock
- Folding step unit is a dark gray color

HOW TO ORDER
- Specify cabinet to receive folding step
- Pricing P-320

INSTALLATION TIP
- Instructions for attaching folding step to toe board included
- To install under existing cabinet, toe board must be removed and attached to folding step

NOTES/CAUTION
- Increase cabinet width to 18½" or wider to accommodate folding step in inset.

© Copyright StarMark Cabinetry FEBRUARY 2022

Block 10510 Vanity Hamper Kit

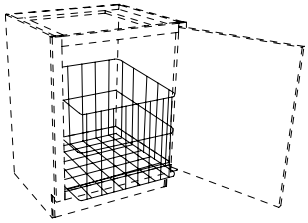

VHK15
VHK18

DESIGN CONSIDERATIONS

- Fits 21" deep cabinets. See block 8010 (VF) for cabinets to mount hamper into.
- Removable epoxy coated wire hamper mounted on floor track

HOW TO ORDER

- Pricing P-321

NOTES/CAUTION

- In inset, cabinet door must open 170° for hamper function.

Hamper:	Size
VHK15	11⅞" w x 14¾" h x 18" d
VHK18	14¾" w x 19⅜" h x 18" d

Block 10511 Vanity Hamper Pull Out

NEW!

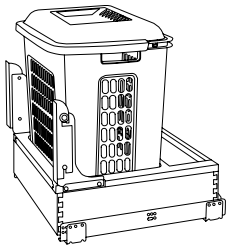

VWHMP24KIT

DESIGN CONSIDERATIONS

- 20 5/16" wide 18 11/16" deep x 21¼" high
- Dovetailed wood bottom-mount base with full extension glides
- Removable white plastic linen basket with lid
- Includes extra storage space behind basket

HOW TO ORDER

- Pricing P-321

Block 10520 Base Kitchen Basket Kit

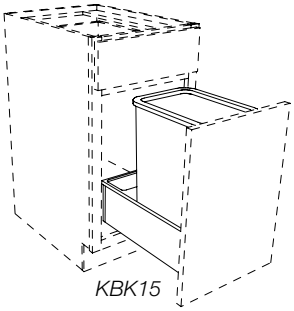

KBK15

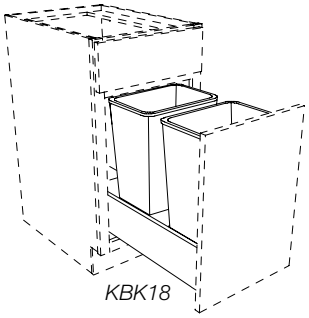

KBK18

KBK15
KBK18

DESIGN CONSIDERATIONS

- Includes wood basket holder, slides, and waste baskets
- Fits standard 15", 18" or 21" base
- KBK15 has one 35 qt. gray colored plastic basket and a small space for trash bag storage
- KBK18 has two 35 qt. gray colored plastic baskets
- Use KBK18 for 21" wide base

HOW TO ORDER

- Pricing P-321

Block 10522 Kitchen Basket with Motion Drive Kit

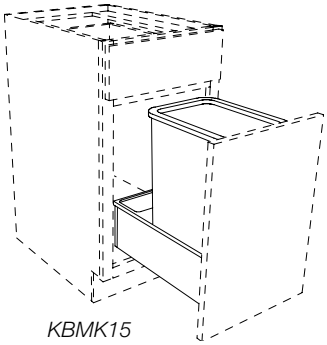

KBMK15

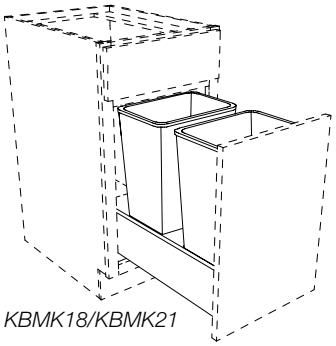

KBMK18/KBMK21

KBMK15
KBMK18

DESIGN CONSIDERATIONS

- Includes wood basket holder, slides, waste baskets and motion unit.
- Fits standard 15", 18" or 21" base
- Use KBK18 for 21" wide base
- Touch the cabinet door to activate motion drive
- Outlet needs to be installed near unit, not directly behind.
- KBMK15 has one 35 qt. gray colored plastic basket and a small bin for trash bag storage.
- KBMK18 has two 35 qt. gray colored plastic baskets
- Front basket includes a lid
- Front basket must be removed before rear basket can be removed.

HOW TO ORDER

- Partial wiring needs to be completed on jobsite.
- Installer will need to drill access hole in rear of cabinet for wiring.
  - Pricing P-321

Block 10524 Kitchen Basket Large Kit

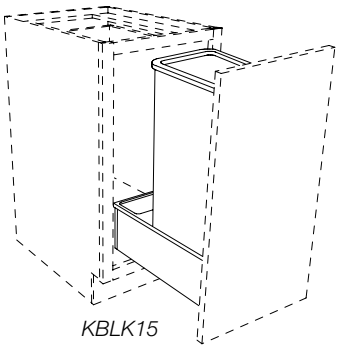

KBLK15

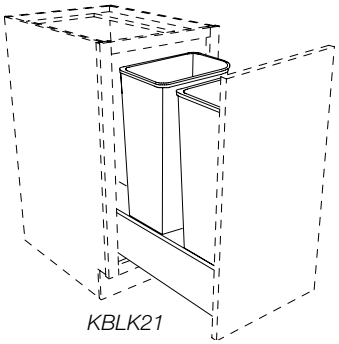

KBLK21

KBLK15
KBLK21

DESIGN CONSIDERATIONS

- Includes wood basket holder, slides, and waste baskets
- Fits standard 15" or 21" full height base
- Soft close mechanism
- KBL15 has one 50 qt. gray colored plastic basket and a small bin for trash bag storage
- KBL21 has two 50 qt. gray colored plastic baskets
- Front basket must be removed before rear basket can be removed.

HOW TO ORDER

- Pricing P-321

© Copyright StarMark Cabinetry FEBRUARY 2022

Block 10526 Kitchen Basket Large with Motion Drive Kit

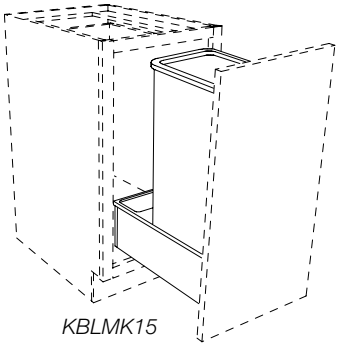

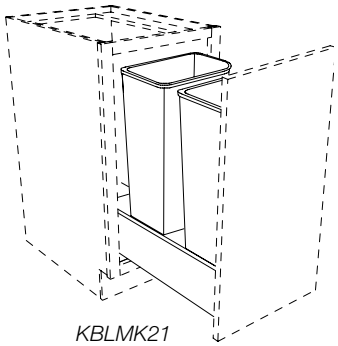

KBLMK15
KBLMK21

DESIGN CONSIDERATIONS

- Includes wood basket holder, slides, waste baskets and motion unit.
- Fits standard 15" or 21" full height base
- Touch the cabinet door to activate motion drive
- Outlet needs to be installed near unit, not directly behind.
- KBMK15 has one 50 qt. gray colored plastic basket and a small bin for trash bag storage.
- KBMK21 has two 50 qt. gray colored plastic baskets
- Front basket includes a lid
- Front basket must be removed before rear basket can be removed.

HOW TO ORDER

- Pricing P-321

INSTALLATION TIP

- Partial wiring needs to be completed on jobsite.
- Installer will need to drill access hole in rear of cabinet for wiring.

Block 10527 Vanity Waste Container

NEW!

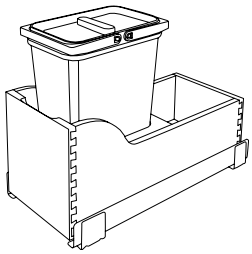

VWC15KIT

DESIGN CONSIDERATIONS

- Dovetailed wood bottom-mount base with full extension glides
- 8⅝" wide 18⁹⁄₁₆" deep x 13¹⁵⁄₁₆" high
- Includes space for trash bag storage
- 8 quart gray waste container with white lid
- Carry handles flip up to remove waste container from base

HOW TO ORDER

- Pricing P-321

Block 10540 DVD/Blu-ray Player Shelf

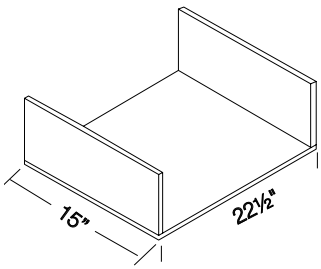

3SVCRS

DESIGN CONSIDERATIONS

- ¾" thick 3-sided solid shelf is stained to match interior of cabinet
- After installation, the height of the opening is 7", the depth is 15", and the width is 22½"

HOW TO ORDER

- Pricing P-321

Block 10555 Paper Towel Dispenser

PTD

DESIGN CONSIDERATIONS

- 11" wide x 4" deep
- Paper towel dispenser is clear with brushed stainless steel accents

HOW TO ORDER

- See block 9165 for chase cutout that includes the paper towel dispenser
- Pricing P-321

© Copyright StarMark Cabinetry FEBRUARY 2022

Block 10570 Hinges

DESIGN CONSIDERATIONS
- OH are Concealed hinges for Modern doors
- HGSFCL are soft close hinges for Modern doors.
- HGSTCL are soft close hinges for Traditional doors.

HOW TO ORDER
- Hinges are priced and sold individually
- Pricing P-322

INSTALLATION TIP
- Hinge adjustment instructions are located on OneTouch in the Product Info + Resources section.

NOTES/CAUTION
- OH, HGSFCL and HGSTCL hinges not available in inset cabinetry.
- A visual to assist with ordering Inset concealed hinges is located on OneTouch in the Product Info + Resources section.

OH Modern Concealed Hinge
HGSFCL Modern soft close Hinge
HGSTCL Traditional soft close Hinge
HGNIC Inset Matte Nickel
HGBRO Inset Dark Oil Rubbed Bronze
HGIRN Inset Pewter
HGBLK Inset Black
HGCBZ Inset Copper Bronze
HGIC Inset Concealed
HGICS Inset Concealed soft close

Block 10571 Roll Out Tray Glides

NEW!

DESIGN CONSIDERATIONS
- Glides in this block are intended to be used to retrofit cabinets that are already installed so the cabinet can accept roll trays. Order the roll trays (Block 10000) and the pilasters (Block 10001) separately.
- Order Glide Clips (listed below) separately.
- Glides are sold in pairs.

HOW TO ORDER
- Select glides based on the cabinet depth.
- Pricing P-322

Glides	
BSFTCLGL24	21" Glide for 24" deep cabinet
BSFTCLGL21	18" Glide for 21" deep cabinet
BSFTCLGL18	15" Glide for 18" deep cabinet
BSFTCLGL15	12" Glide for 15" deep cabinet
BSFTCLGL12	9" Glide for 12" deep cabinet
BSFTCLGL30	27" Glide for Square Corner Drawer

Glide Clips	
DWRCLPLT	Glide Clip - left
DWRCLPRT	Glide Clip - right
NWDWRCLPLT	Narrow Glide Clip - left (less than 9" opening)
NWDWRCLPRT	Narrow Glide Clip - right (less than 9" opening)
INDWRCLPLT	Inset Glide Clip with side to side roller - left
INDWRCLPRT	Inset Glide Clip with side to side roller - right
INDWRBKTL	Inset Brown Glide Mounting Bracket - left
INDWRBKTR	Inset Brown Glide Mounting Bracket - right

Block 10572 Blum Restrictor Clips

DESIGN CONSIDERATIONS
- Package of 25
- Designed for Blum soft close hinges
- Designed to be placed inside the hinge so the door will not open wider than 90 degrees.
- Not available in Inset or in Crew Series

HOW TO ORDER
- Pricing P-322

BLRESTRICT

Block 10580 Installation Screws

DESIGN CONSIDERATIONS
- Package of 100 brass screws includes:
  a) 50-pan head screws #8 x 2½"
  b) 50-bugle head screws #8 x 2½"
- Pan head screws are for attaching cabinet to wall
- Bugle head screws are for attaching cabinet to cabinet

HOW TO ORDER
- Pricing P-322

IS

This icon indicates that this product is illustrated in the Products in Color Section.

This icon indicates that this product is available in Inset Cabinetry

© Copyright StarMark Cabinetry FEBRUARY 2022

THIS PAGE INTENTIONALLY LEFT BLANK

© Copyright StarMark Cabinetry FEBRUARY 2022

Index

Description	Nomenclature	Page
Angle End Panel - Base	BAEP	C-410
Angle End Panel - Utility	UAEP	C-410
Angle End Panel - Vanity	VAEP	C-410
Angle End Panel - Wall	WAEP	C-410
Authentic Appliance Front - Dishwasher	ADWP	C-391
Authentic Appliance Front - Ice Maker	AICP	C-391
Authentic Appliance Front - Inset Dishwasher	IDWP	C-391
Authentic Appliance Front - Inset Refrigerator	IREFP	C-391
Authentic Appliance Front - Refrigerator	AREFP	C-391
Authentic Appliance Front - Trash Compactor	ATCP	C-391
Authentic Desk Island Panel (Wainscot)	ADIP	C-392
Authentic Desk Island Panel (Wainscot) - Vertical	VADIP	C-392
Beaded Panel	38FBBP	C-393
Beverage Pod Accessory for Wall Pull Out Filler Storage	KCUPWPF	C-395
Birch Melamine Panel	BMP	C-394
Chamfered Panel Box - Base	BCPB	C-407
Chamfered Panel Box - Utility	UCPB	C-407
Chamfered Panel Box - Vanity	VCPB	C-407
Chamfered Panel Box - Wall	WCPB	C-407
Chamfered Panel Box with Fluting - Base	BCFPB	C-408
Chamfered Panel Box with Fluting - Utility	UCFPB	C-408
Chamfered Panel Box with Fluting - Vanity	VCFPB	C-408
Chamfered Panel Box with Fluting - Wall	WCFPB	C-408
Corner Filler - Base	FBC	C-401
Corner Filler - Utility	UWC	C-401
Corner Filler - Wall	FWC	C-401
Dishwasher Insert Panel	DIP	C-391
End Panel - Wall	WEP	C-402
End Panel - Base	BEP	C-402
End Panel - Refrigerator Base	RBEP	C-402
End Panel - Refrigerator Wall	RWEP	C-402
End Panel - Vanity	VEP	C-402
End Panel with Lamb's Tongue - Base	BEPLT	C-412
End Panel with Lamb's Tongue - Utility	UEPLT	C-412
End Panel with Lamb's Tongue - Vanity	VEPLT	C-412
End Panel with Lamb's Tongue - Wall	WEPLT	C-412
FFD Back Panel	FFD SQ FT	C-392
FFD End Panel - Base	BXFD	C-405
FFD End Panel - Tall	TXFD	C-405
FFD End Panel - Utility	UXFD	C-405
FFD End Panel - Vanity	VXFD	C-405
FFD End Panel - Wall	WXFD	C-405
FFD Panel Box Plain - Base	BXFDPL	C-407
FFD Panel Box Plain - Utility	UXFDPL	C-407
FFD Panel Box Plain - Vanity	VXFDPL	C-407
FFD Panel Box Plain - Wall	WXFDPL	C-407
Filler	F	C-395
Filler - Base	MFB	C-394
Filler - Utility	MFU	C-394
Filler - Wall	FW	C-394
Filler Box Column Block - Base	BFBCMB	C-409
Filler Box Column Block - Utility	UFBCMB	C-409
Filler Box Column Block - Vanity	VFBCMB	C-409
Filler Box Column Block - Wall	WFBCMB	C-409
Filler Cap	FC	C-400
Filler Column Block - Base	MBFCLMB	C-399
Filler Column Block - Utility	MUFCLMB	C-399
Filler Column Block - Wall	WFCLMB	C-399
Filler with Rope Trim and Plinth Block Top and Bottom (blank for onlay) - Base	MBFRO	C-398
Filler with Rope Trim and Plinth Block Top and Bottom (blank for onlay) - Utility	MUFRO	C-398
Filler with Rope Trim and Plinth Block Top and Bottom (blank for onlay) - Wall	WFRO	C-398
Finished Back option for Appliance Front	DAPFB	C-391
Fluted Angle End Panel - Base	BFAEP	C-411
Fluted Angle End Panel - Utility	UFAEP	C-411
Fluted Angle End Panel - Vanity	VFAEP	C-411
Fluted Angle End Panel - Wall	WFAEP	C-411
Fluted Filler	FF	C-397
Fluted Filler Cap with Chamfered Edge - Base	BFFCC	C-400
Fluted Filler Cap with Chamfered Edge - Utility	UFFCC	C-400
Fluted Filler Cap with Chamfered Edge - Wall	WFFCC	C-400
Fluted Filler Cap with Chamfered Edge and Round Onlay Blanks - Base	BFFCCO	C-401
Fluted Filler Cap with Chamfered Edge and Round Onlay Blanks - Utility	UFFCCO	C-401
Fluted Filler Cap with Chamfered Edge and Round Onlay Blanks - Wall	WFFCCO	C-401
Fluted Filler with Blank for Capital Onlay - Base	MBFFBU	C-398
Fluted Filler with Blank for Capital Onlay - Utility	MUFFBU	C-398
Fluted Filler with Blank for Capital Onlay - Wall	WFFBU	C-398
Fluted Filler with Plinth and Base Block - Base	MBFFPB3	C-397
Fluted Filler with Plinth and Base Block - Tall	TFFPB3	C-397
Fluted Filler with Plinth and Base Block - Wall	WFFPB3	C-397
Fluted Flush End Panel Box - Base	BFB	C-412
Fluted Flush End Panel Box - Tall	TFB	C-412

© Copyright StarMark Cabinetry FEBRUARY 2022

Index

Description	Nomenclature	Page
Fluted Flush End Panel Box - Vanity	VFB	C-412
Fluted Flush End Panel Box - Wall	WFB	C-412
Fluted Flush End Panel with Plinth and Base Block - Base	BFEP	C-411
Fluted Flush End Panel with Plinth and Base Block - Tall	TFEP	C-411
Fluted Flush End Panel with Plinth and Base Block - Vanity	VFEP	C-411
Fluted Flush End Panel with Plinth and Base Block - Wall	WFEP	C-411
Fluted Panel Box with Blank for Capital - Base	BFBBU	C-408
Fluted Panel Box with Blank for Capital - Utility	UFBBU	C-408
Fluted Panel Box with Blank for Capital - Vanity	VFBBU	C-408
Fluted Panel Box with Blank for Capital - Wall	WFBBU	C-408
Fluted Panel Box with Chamfered Edge and Round Onlay Blanks - Base	BFBO	C-409
Fluted Panel Box with Chamfered Edge and Round Onlay Blanks - Utility	UFBO	C-409
Fluted Panel Box with Chamfered Edge and Round Onlay Blanks - Vanity	VFBO	C-409
Fluted Panel Box with Chamfered Edge and Round Onlay Blanks - Wall	WFBO	C-409
IMDP End Panel - Base	BIMP	C-404
IMDP End Panel - Tall	TIMP	C-404
IMDP End Panel - Utility	UIMP	C-404
IMDP End Panel - Vanity	VIMP	C-404
IMDP End Panel - Wall	WIMP	C-403
IMDP Panel Box Plain - Base	BIMPPL	C-406
IMDP Panel Box Plain - Utility	UIMPPL	C-406
IMDP Panel Box Plain - Vanity	VIMPPL	C-406
IMDP Panel Box Plain - Wall	WIMPPL	C-406
Lazy Susan Base End Panel	LSBEP	C-413
Panel	FMP	C-394
Panel Box Plain - Base	BBFBPL	C-406
Panel Box Plain - Utility	UBFBPL	C-406
Panel Box Plain - Vanity	VBFBPL	C-406
Panel Box Plain - Wall	WBFBPL	C-406
Peg Accessory sets	PGSMULTI/ PGSP/PGSMB/ PGSD	C-396
Plywood Panel - 1/2" Veneer	HALF	C-393
Plywood Panel - 1/4" Veneer	FBP	C-394
Plywood Panel - 1/4" Veneer	FP	C-393
Plywood Shelving/Paneling	PS	C-393
Pull Out Filler Storage - Base	MBPOFS	C-395
Pull Out Filler Storage - Tall Vanity	MTVPOFS	C-395
Pull Out Filler Storage - Vanity	MVPOFS	C-395
Pull Out Filler Storage - Wall	WPOFS	C-395
Pull Out Filler Storage with Soft Close	MBPOFBSSC	C-396
Pull Out Peg Storage - Base	MBPOPS	C-396
Single Doors and Drawer Headers	DRSQFT	C-391
Single Doors and Drawer Headers	HDSQFT	C-391
Tapered Vanity End Panel	TVEP	C-413
Veneer Shiplap Panel	FSLP	C-394
Vertical Grain Finish Panel	FVP	C-393

© Copyright StarMark Cabinetry FEBRUARY 2022

Block 11000 Authentic Appliance Front

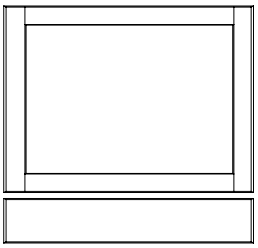

ADWP/IDWP

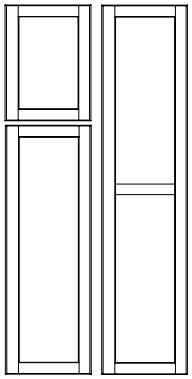

AREFP/IREFP

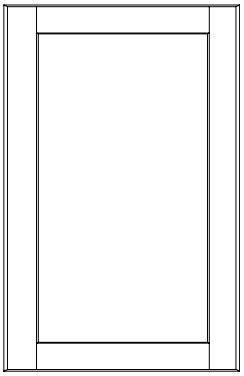

AICP/ATCP

ADWP
AICP
AREFP
ATCP

IDWP
IREFP

DAPFB (finished back option for all appliance fronts)

DESIGN CONSIDERATIONS

- Doors are secured to ¼" plywood panel
- If you don't want the doors secured to a plywood panel, please send manufacturer's specs with your order.
- Panels for cabinetry using a raised arch or square panel door style will have raised square panels
- All Authentic Appliance Fronts are available with Decorative Appliance Panel Finished Back (DAPFB) option.
- The DAPFB option is recommended on appliance fronts for most overlay product.
- Appliance front with the DAPFB option is finished on the back 6" from the edges, unless otherwise specified.
- ADWP Dishwasher panel/IDWP for Inset with frame
- AREFP Refrigerator panel/IREFP for Inset with frame
- AICP Ice Maker panel
- ATCP Trash Compactor panel
- DAPFB Decorative Appliance Panel Finished Back
- On the IDWP and IREFP the appliance may be visible between the frame and the door.
- Appliance fronts built to appliance manufacturer's specifications may not align with doors and drawer fronts on adjacent cabinets. See appliance manufacturer's specifications to see if there are options to modify the appliance or if the adjacent cabinetry requires modification.

HOW TO ORDER

- Dimensions of the ¼" plywood panel must be specified
- When the freezer unit is separate from the refrigerator unit, each unit will need a separate appliance panel. The panels are built separately and charged as such.
- Order appliance front and then specify **DAPFB** option if desired
- Pricing P-325

✪ To order this item, you must fill out and send an Appliance Template with the order.

Block 11010 Dishwasher Insert Panel

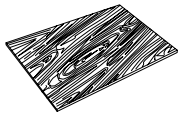

DIP

DESIGN CONSIDERATIONS

24" Wide - 30" High

- ¼" veneer plywood
- Grain direction always follows height

HOW TO ORDER

- Pricing P-325

Block 11020 Single Doors and Drawer Headers

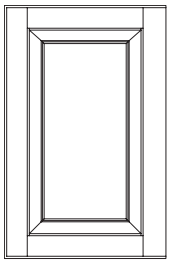

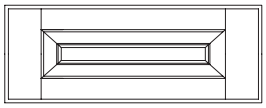

DRSQFT (door per square foot)
HDSQFT (header per square foot)

DESIGN CONSIDERATIONS

- Order single doors and drawer headers for wainscot, false fronts, and more.

HOW TO ORDER

- Specify **L, R** or **No** hinging
- Note on the order form the species, door style, finish, and the size of the door or drawer header.
- Calculate the square footage of the door size or drawer header you want, rounding up to the nearest square foot.
- The minimum charge is one square foot for a drawer header and two square feet for a door.
- Pricing P-325

© Copyright StarMark Cabinetry FEBRUARY 2022

Block 11030 Authentic Desk Island Panel (Wainscot)

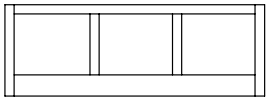

- Maximum width 96"
- Maximum height 42"

ADIP1821
ADIP2241
ADIP4260
ADIP6179
ADIP8096
ADIP97120

	Laguna/Lancaster		All other door styles	
	width range	# inserts	width range	# inserts
ADIP1821	18-21	2	18-21	1
ADIP2241	22-41	2	22-41	2
ADIP4260	42-60	4	42-60	3
ADIP6179	61-79	6	61-79	4
ADIP8096	80-96	6	80-96	5
ADIP97120	97-120	6	97-120	6
VADIP			18-24	3
VADIP			25-36	6
VADIP97120			97-120	6

DESIGN CONSIDERATIONS

- Framing will match the door's stiles and rails.
- Bottom rail is 7". A 4½" WBR is available at no extra charge.
- Available in all door styles except arched, mitered and slab.
- To achieve an ADIP for arched, mitered and slab doors, use the FFD SQ FT charge in Block 11035.

HOW TO ORDER

- Specify **exact size** in Special Information section
- Choose from width ranges at left for pricing
- If applicable, specify **4½" WBR** in Special Information section
- Pricing P-326

*** When working with FF&D SQ FT for an ADIP type of a look keep in mind that doors will overlay frame openings just as if they were installed on the front of a cabinet. If you want to attach corbels or countertop brackets between the doors of a FF&D you will need to account for the width of the corbel and the width of the door overlay. For example, Modern doors overlay the frame 1¼" on each side of the opening. If the center stile is 3" on a FF&D there will only be ½" between the two doors.**

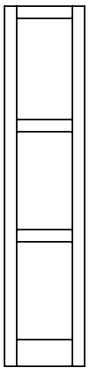

- Maximum width 36"
- Maximum height 96"

18-24" wide

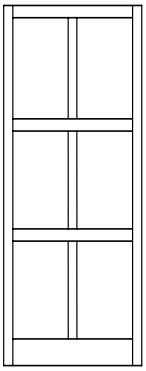

25-36" wide

VADIP
VADIP97120

DESIGN CONSIDERATIONS

- Framing will match the door's stiles and rails.
- Bottom rail is 7". A 4½" WBR is available at no extra charge.
- Maximum height 96"
- Maximum width 36"
- Available in all door styles except arched, mitered and slab.
- To achieve an VADIP for arched, mitered and slab doors, use the FFD SQ FT charge in Block 11035.

HOW TO ORDER

- Specify **width by height**
- If applicable, specify **4½" WBR** in Special Information section
- Pricing P-326

Block 11035 FFD Back Panel

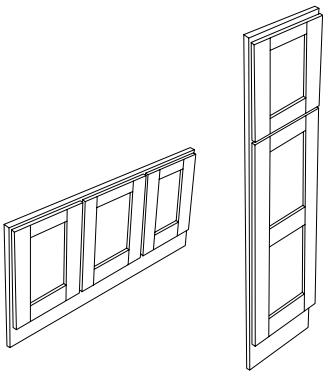

WFFDSQFT
BFFDSQFT
TFFDSQFT
BFFD97120
TFFD97120

DESIGN CONSIDERATIONS

- ¾" Solid wood face frame with doors
- Bottom rail is 5½", unless specified otherwise.
- Maximum size 48" x 96"/ 96" x 48"

HOW TO ORDER

- Specify **width by height** in Special Information section
- Specify Fixed or Working doors
- ✪ Send drawing of desired configuration
- Pricing P-326

*** When working with FF&D SQ FT for an ADIP type of a look keep in mind that doors will overlay frame openings just as if they were installed on the front of a cabinet. If you want to attach corbels or countertop brackets between the doors of a FF&D you will need to account for the width of the corbel and the width of the door overlay. For example, Modern doors overlay the frame 1¼" on each side of the opening. If the center stile is 3" on a FF&D there will only be ½" between the two doors.**

© Copyright StarMark Cabinetry **FEBRUARY 2022**

Block 11040 Plywood Panel

DESIGN CONSIDERATIONS
- Size is stated width by height
- Grain direction always follows height
- FP and FBP are veneer
- MDF core on ¼" panels
- Panels up to 48" in width are available in Weathered

HOW TO ORDER
- To modify dimensions, use **ACMOD** in Block 9085. Specify dimensions in special info.
- Pricing P-327

¼" Plywood

VENEER
FP1218
FP1230
FP1236
FP1242
FP1248
FP1831
FP2131
FP2135
FP2435
FP2484
FP2496
FPSQFT

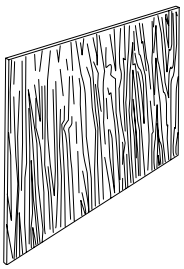

¼" Plywood

VENEER
FBP3630
FBP3635
FBP4830
FBP4835
FBP4896
FBPSQFT

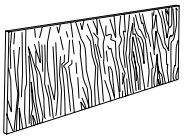

¼" Plywood

VENEER
FBP7230
FBP7235
FBP9630
FBP9635

½" Plywood

HALF2496
HALF4848
HALF4896

Block 11045 Vertical Grain Finish Panel

DESIGN CONSIDERATIONS
- 96" x 48"
- Grain direction always follows height
- FVP12 is 1/2" plywood and FVP34 is 3/4" plywood
- MDF core
- Panels up to 48" in width are available in Weathered

HOW TO ORDER
- See block 12605 for finished edges. Note: this panel cannot be finished on both sides.
- Pricing P-327

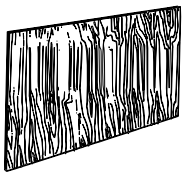

VENEER ½" Plywood
FVP129648
FVP12SQFT
FVP1212048
FV12SQF120

¾" Plywood
FVP349648
FVP34SQFT
FVP3412048
FV34SQF120

Block 11050 ¾" Plywood Shelving/Paneling

DESIGN CONSIDERATIONS
- ¾" plywood shelf is edge banded
- Grain direction will follow width
- See block 12605 for finished sides and edges.

HOW TO ORDER
- This item is priced per square foot
- Example: PS4896 is 32 square feet
- Specify **width** of panel
- Specify **edges** to be banded
- Pricing P-327

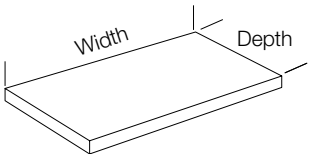

PS per square foot (up to 48" D x 96" W)

Block 11060 Beaded Panel

DESIGN CONSIDERATIONS
- Size is stated width by height
- Grain direction always follows height
- Panel for tinted varnish finish will be MDF
- Veneer panels will have an MDF core
- Panels are ⅜" thick
- Beads are 3" on center
- Not recommended for Walnut finished in Natural. The bead routes highlight the lighter core material against the dark veneer.

HOW TO ORDER
- To modify dimensions, use **ACMOD** in Block 9085. Specify dimensions in special info.
- Pricing P-327

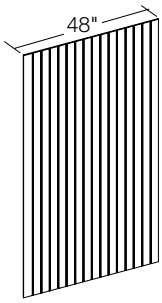

38FBBP4835
38FBBP4848
38FBBP4896

© Copyright StarMark Cabinetry FEBRUARY 2022

Block 11065 ½" Veneer Shiplap Panel

NEW! I

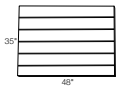

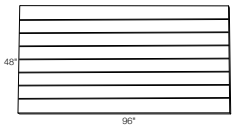

FSLP123548
FSLP124896

DESIGN CONSIDERATIONS

½" veneer

- Shiplap grooves spaced every 6", running the 96" or 48" length of the panel
- Grain runs in same direction as shiplap grooves
- On Tinted Varnish orders, the panel will be 100% MDF

HOW TO ORDER

- To modify dimensions, use **ACMOD** in Block 9085. Specify dimensions in special info.
- Pricing P-328

Block 11070 Panel

I

FMP1296
FMP2496

DESIGN CONSIDERATIONS

¼" Plywood

- Stained to match exterior color of cabinets
- This panel is designed to cover the bottom of wall cabinets. Use in conjunction with FM8 (block 12700) or BLSM8 (block 12750).
- Grain runs along 96" length
- MDF core

HOW TO ORDER

- Pricing P-328

Block 11071 ¼" Birch Melamine Panel

NEW! I

25BMP4848
25BMP4896
25BMPSQFT

DESIGN CONSIDERATIONS

¼" Plywood

- Size is stated width by height
- Grain direction always follows height

HOW TO ORDER

- Specify width by height for square foot sizing.
- See block 12605 for finished sides. Note: this panel is not available with finished edges.
- Pricing P-328

Block 11072 ½" Birch Melamine Panel

NEW! I

50BMP4848
50BMP4896
50BMPSQFT

DESIGN CONSIDERATIONS

½" Plywood

- Size is stated width by height
- Grain direction always follows height

HOW TO ORDER

- Specify width by height for square foot sizing.
- See block 12605 for finished sides and edges.
- Pricing P-328

Block 11073 ¾" Birch Melamine Panel

NEW! I

DESIGN CONSIDERATIONS

¾" Plywood

- Size is stated width by height
- Grain direction always follows height
- ¾" panel available in heights greater than 96". Use square foot sizing.

75BMP4848
75BMP4896
75BMPSQFT

HOW TO ORDER

- Specify width by height for square foot sizing.
- See block 12605 for finished sides and edges.
- Pricing P-328

Block 11080 Filler

I

DESIGN CONSIDERATIONS

- Solid ¾" frame stock
- Both long edges and face are finished
- Wall fillers (FW) have 12" return to wall
- Base (FB) and Utility (FU) fillers have attached toe kicks
- Base (FB) filler is 34½" high
- Base Tall (FBT) filler is 40½" high
- Wall (FW) and Utility (FU) fillers nomenclature reads width (3" or 6") by height

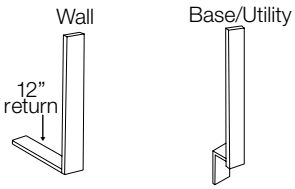

HOW TO ORDER

- To modify dimensions, use **ACMOD** in Block 9085. Specify dimensions in special info.
- Pricing P-328

FW0324
FW0327
FW0330
FW0333
FW0336
FW0339
FW0342
FW0345
FW0348
FW0351
FW0354
FW0357
FW0360
FW0363
FW0366

FW0624
FW0627
FW0630
FW0633
FW0636
FW0639
FW0642
FW0645
FW0648
FW0651
FW0654
FW0657
FW0660
FW0663
FW0666

MFB3
MFB3T

MFB6
MFB6T

MFU0381
MFU0384
MFU0387
MFU0390
MFU0393
MFU0396

MFU03102
MFU03108
MFU03114
MFU03120

MFU0681
MFU0684
MFU0687
MFU0690
MFU0693
MFU0696

MFU06102
MFU06108
MFU06114
MFU06120

© Copyright StarMark Cabinetry FEBRUARY 2022

Block 11090 Filler

DESIGN CONSIDERATIONS
- Solid ¾" frame stock
- Both long edges and face are finished

HOW TO ORDER
- To modify dimensions, use **ACMOD** in Block 9085. Specify dimensions in special info.
- Pricing P-329

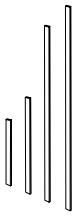

F1.524	**F1.563**	**F324**	**F363**	**F624**	**F663**
F1.527	**F1.566**	**F327**	**F366**	**F627**	**F666**
F1.5275	**F1.576**	**F3275**	**F376**	**F6275**	**F676**
F1.530	**F1.577**	**F330**	**F377**	**F630**	**F677**
F1.5305	**F1.579**	**F3305**	**F379**	**F6305**	**F679**
F1.533	**F1.580**	**F333**	**F380**	**F633**	**F680**
F1.5345	**F1.582**	**F3345**	**F382**	**F6345**	**F682**
F1.536	**F1.583**	**F336**	**F383**	**F636**	**F683**
F1.5365	**F1.584**	**F3365**	**F384**	**F6365**	**F684**
F1.539	**F1.585**	**F339**	**F385**	**F639**	**F685**
F1.542	**F1.586**	**F342**	**F386**	**F642**	**F686**
F1.545	**F1.588**	**F345**	**F388**	**F645**	**F688**
F1.548	**F1.589**	**F348**	**F389**	**F648**	**F689**
F1.551	**F1.590**	**F351**	**F390**	**F651**	**F690**
F1.554	**F1.591**	**F354**	**F391**	**F654**	**F691**
F1.557	**F1.592**	**F357**	**F392**	**F657**	**F692**
F1.560	**F1.596**	**F360**	**F396**	**F660**	**F696**
	F1.5102		**F3102**		**F6102**
	F1.5108		**F3108**		**F6108**
	F1.5114		**F3114**		**F6114**
	F1.5120		**F3120**		**F6120**

Block 11108 Beverage Pod Accessory for Wall Pull Out Filler Storage

DESIGN CONSIDERATIONS
- 19¾" high chrome wire rack
- Fits all heights of WPOFS3_ in block 11110
- Holds 44 beverage pods

HOW TO ORDER
- Order the WPOFS separately
- Pricing P-329

INSTALLATION TIPS
- Remove WPOFS shelves to install KCUPWPFS on job site

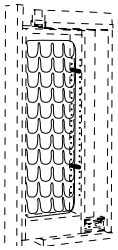

KCUPWPF3

Block 11110 Pull Out Filler Storage

DESIGN CONSIDERATIONS
- No modifications allowed
- At all widths and heights, shelves have chrome railings. Upper shelves are adjustable, bottom shelf is fixed. See chart for quantities.
- This unit is **not enclosed** with end panels. The base units do not have a toe kick. A small scribe moulding fits behind the lip of the face frame of adjoining cabinets. You must remove the scribe to install the unit next to a flush end panel or a furniture end panel.
- To install this unit at the end of a run, a panel must be installed next to the unit.
- Vanity fillers include clear acrylic bins for smaller items. See chart for quantities.
- For full access to shelving, do not install this unit next to a deeper cabinet.
- MTVPOFS630 includes soft close

HOW TO ORDER
- We recommend specifying Finished Ends (Block 9020) on adjacent cabinets.
- See blocks 11340 - 11360 for filler caps. Filler caps are placed on the front of this unit so it's flush with doors on the adjacent cabinets.
- Pricing P-329

INSTALLATION TIPS
- Moulding treatment for the wall cabinet pull-out fillers will have to be thought out. See HelpZone.

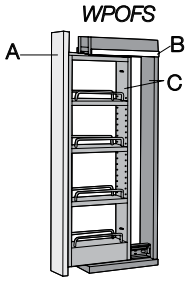

WPOFS330
WPOFS333
WPOFS336
WPOFS339
WPOFS342
WPOFS630
WPOFS633
WPOFS636
WPOFS639
WPOFS642

Component A
- The specie and finish of this component will match the rest of the order.
- On a base and tall vanity unit, the height of **A** is 30⅜".
- On a vanity unit, the height of **A** is 27⅜".
- On a wall cabinet, the height of **A** corresponds to the height ordered: 30", 33", 36", 39", 42".

Component B
- This scribe moulding, which is on both sides, can be removed so a one-inch end panel can be installed.

Component C
- Component **C** is constructed of hardwood. The glides are full extension.

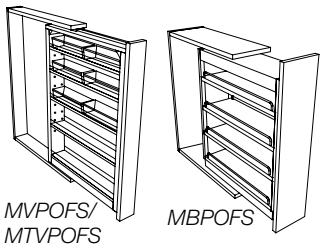

	Number of shelves	Number of bins
WPOFS__30	4	0
WPOFS__33	4	0
WPOFS__36	5	0
WPOFS__39	5	0
WPOFS__42	6	0
MBPOFS	4	0
MVPOFS	5	4
MTVPOFS	5	6

MBPOFS3
MBPOFS6

MVPOFS327
MVPOFS627

MTVPOFS330
MTVPOFS630

© Copyright StarMark Cabinetry FEBRUARY 2022

Block 11111 Pull Out Filler Storage with Soft Close

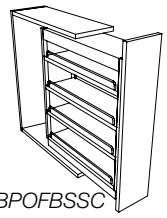

MBPOFBSSC

MBPOFBSSC3
MBPOFBSSC6

DESIGN CONSIDERATIONS

- No modifications allowed
- Includes soft close
- One fixed shelf and three adjustable shelves
- This unit is **not enclosed** with end panels. The base units do not have a toe kick. A small scribe moulding fits behind the lip of the face frame of adjoining cabinets. You must remove the scribe to install the unit next to a flush end panel or a furniture end panel.
- To install this unit at the end of a run, a panel must be installed next to the unit.
- For full access to shelving, do not install this unit next to a deeper cabinet.

HOW TO ORDER

- We recommend specifying Finished Ends (Block 9020) on adjacent cabinets.
- See Blocks 11340 - 11360 for filler caps. Filler caps are placed on the front of this unit so it's flush with doors on adjacent cabinets.
- Pricing P-330

Block 11120 Pull Out Peg Storage

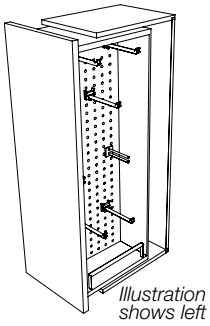

Illustration shows left

WPOPS3L
WPOPS3R

WPOPS6L
WPOPS6R

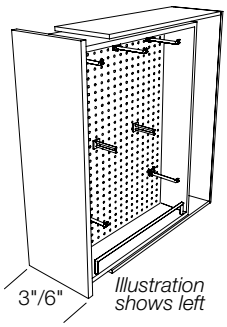

Illustration shows left

MBPOPS3L
MBPOPS3R

MBPOPS6L
MBPOPS6R

DESIGN CONSIDERATIONS

- No modifications allowed
- This unit is **not enclosed** with end panels. The base units do not have a toe kick. A small scribe moulding fits behind the lip of the face frame of adjoining cabinets. You must remove the scribe to install the unit next to a flush end panel or a furniture end panel.
- To install this unit at the end of a run, a panel must be installed next to the unit.
- Perforated divider has a set of rubberized black pegs and hooks. See chart below for quantities. For additional accessories, see Peg Accessory Sets chart.
- Wood bottom with chrome railings is an additional storage shelf.
- In addition to a perforated divider, BPOPS9 has shelves on the left side.

INTERNAL DIMENSIONS		
	Wall 3"/6"	Base 3"/6"/9"
width	2¼", 5¼"	2¼", 5¼", 8¼"
depth	8¾"	20¾"

HOW TO ORDER

- We recommend specifying Finished Ends (Block 9020) on adjacent cabinets.
- See Blocks 11340 - 11360 for filler caps. Filler caps are placed on the front of this unit so it's flush with doors on adjacent cabinets.
- Pricing P-330

INSTALLATION TIPS

- Moulding treatment for the wall cabinet pull-out unit will have to be thought out. See HelpZone.

Block 11120 Pull Out Peg Storage continued

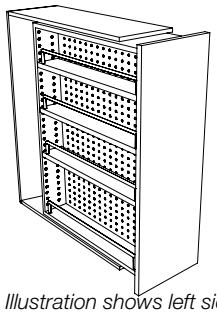

Illustration shows left side of MBPOPS9

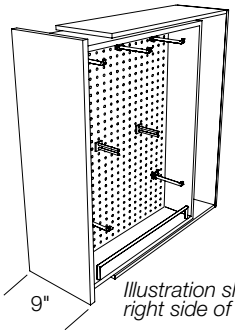

Illustration shows right side of MBPOPS9

MBPOPS9

	Pegs Included with each Filler				
	3" Wall	6" Wall	3" Base	6" Base	9" Base
5 Hole Rack	1	1	1		
3" Single Hook	8	3	12	6	6
3" Double Hook	4		6		
3" Peg	8		12		
6" Single Hook		8		12	12
6" Double Hook		4		6	6
6" Peg		8		12	12

PGSMULTI

PGSS35

PGSD35

PGSP36

PGSS65

PGSD65

PGSP66

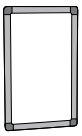

PGSMB

Peg Accessory Sets
PGSMULTI
PGSS35
PGSD35
PGSP36
PGSS65
PGSD65
PGSP66
PGSMB

Peg Accessory Sets		
Nomenclature	Description	Qty
PGSMULTI	5 Hole Rack	1
PGSS35	3" Single Hook	5
PGSD35	3" Double Hook	5
PGSP36	3" Peg	6
PGSS65	6" Single Hook	5
PGSD65	6" Double Hook	5
PGSP66	6" Peg	6
PGSMB	Message Board	1

© Copyright StarMark Cabinetry FEBRUARY 2022

Block 11130 Fluted Filler

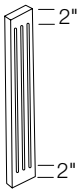

DESIGN CONSIDERATIONS

- Fluted fillers may be ordered in ½" increments from 2" to 9" wide
- Flutes are ⅜" in width and 3⁄16" in depth
- Flutes stop 2" from top and bottom, unless specified otherwise
- Nomenclature reads width (3", 6" or 9") by height

HOW TO ORDER

- To modify dimensions, use **ACMOD** in Block 9085. Specify dimensions in special info.
- There is no upcharge to specify start and stop points for flutes.
- Pricing P-331

FF324	**FF377**	**FF624**	**FF677**	**FF924**	**FF977**
FF327	**FF379**	**FF627**	**FF679**	**FF927**	**FF979**
FF3275	**FF380**	**FF6275**	**FF680**	**FF9275**	**FF980**
FF330	**FF382**	**FF630**	**FF682**	**FF930**	**FF982**
FF3305	**FF383**	**FF6305**	**FF683**	**FF9305**	**FF983**
FF333	**FF384**	**FF633**	**FF684**	**FF933**	**FF984**
FF3345	**FF385**	**FF6345**	**FF685**	**FF9345**	**FF985**
FF336	**FF386**	**FF636**	**FF686**	**FF936**	**FF986**
FF3365	**FF388**	**FF6365**	**FF688**	**FF9365**	**FF988**
FF339	**FF389**	**FF639**	**FF689**	**FF939**	**FF989**
FF342	**FF390**	**FF642**	**FF690**	**FF942**	**FF990**
FF345	**FF391**	**FF645**	**FF691**	**FF945**	**FF991**
FF348	**FF392**	**FF648**	**FF692**	**FF948**	**FF992**
FF351	**FF396**	**FF651**	**FF696**	**FF951**	**FF996**
FF354	**FF3102**	**FF654**	**FF6102**	**FF954**	**FF9102**
FF357	**FF3108**	**FF657**	**FF6108**	**FF957**	**FF9108**
FF360	**FF3114**	**FF660**	**FF6114**	**FF960**	**FF9114**
FF363	**FF3120**	**FF663**	**FF6120**	**FF963**	**FF9120**
FF366		**FF666**		**FF966**	
FF376		**FF676**		**FF976**	

Block 11140 Fluted Filler with Plinth and Base Block

Maximum 66" High

DESIGN CONSIDERATIONS

3" Wide

- Both long edges and face are finished
- 1" reveal at top for moulding application
- Rosette is routed into plinth

HOW TO ORDER

- To modify dimensions, use **ACMOD** in Block 9085. Specify dimensions in special info.
- Pricing P-331

WFFPB324	**WFFPB348**
WFFPB327	**WFFPB351**
WFFPB330	**WFFPB354**
WFFPB333	**WFFPB357**
WFFPB336	**WFFPB360**
WFFPB339	**WFFPB363**
WFFPB342	**WFFPB366**
WFFPB345	

Maximum 40½" High

34½" high	40½" high
MBFFPB3	**MBFFPB3T**

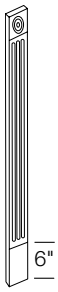

TFFPB381	**TFFPB390**	**TFFPB3102**
TFFPB384	**TFFPB393**	**TFFPB3108**
TFFPB387	**TFFPB396**	**TFFPB3114**
		TFFPB3120

© Copyright StarMark Cabinetry FEBRUARY 2022

Block 11300 Fluted Filler with Blank for Capital Onlay I

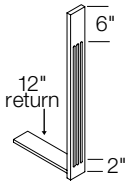

DESIGN CONSIDERATIONS

3" and 6" Wide

- Both long edges and face are finished
- Wall fillers (WF) have 12" return to wall
- Onlays are sold separately
- Flutes stop 6" from top and 2" from bottom, unless specified otherwise
- Wall (FW) and Utility (UF) fillers nomenclature reads width (3" or 6") by height

HOW TO ORDER

- See block 9180 for onlay attachment
- To modify dimensions, use **ACMOD** in Block 9085. Specify dimensions in special info.
- Pricing P-332

WFFBU324	**WFFBU624**
WFFBU327	**WFFBU627**
WFFBU330	**WFFBU630**
WFFBU333	**WFFBU633**
WFFBU336	**WFFBU636**
WFFBU339	**WFFBU639**
WFFBU342	**WFFBU642**
WFFBU345	**WFFBU645**
WFFBU348	**WFFBU648**
WFFBU351	**WFFBU651**
WFFBU354	**WFFBU654**
WFFBU357	**WFFBU657**
WFFBU360	**WFFBU660**
WFFBU363	**WFFBU663**
WFFBU366	**WFFBU666**

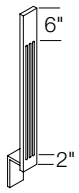

Maximum 40½" High

34½" high	40½" high
MBFFBU3	**MBFFBU3T**
MBFFBU6	**MBFFBU6T**

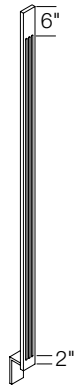

MUFFBU381	**MUFFBU681**
MUFFBU384	**MUFFBU684**
MUFFBU387	**MUFFBU687**
MUFFBU390	**MUFFBU690**
MUFFBU393	**MUFFBU693**
MUFFBU396	**MUFFBU696**
MUFFBU3102	**MUFFBU6102**
MUFFBU3108	**MUFFBU6108**
MUFFBU3114	**MUFFBU6114**
MUFFBU3120	**MUFFBU6120**

Block 11310 Filler with Rope Trim and Plinth Block Top and Bottom (blank for onlay) I

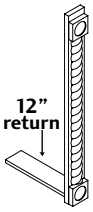

Maximum 66" High

DESIGN CONSIDERATIONS

3" Wide

- Wall fillers (WF) have a 12" return to wall
- 1" reveal at top of wall and tall filler for moulding application
- Onlays are sold separately
- Use Cherry for Alder cabinetry

HOW TO ORDER

- See block 9180 for onlay attachment
- To modify dimensions, use **ACMOD** in Block 9085. Specify dimensions in special info.
- Pricing P-332

Cherry, Hickory, Maple, Oak, Walnut	**Cherry, Hickory, Maple, Oak, Walnut**
WFRO324	**WFRO348**
WFRO327	**WFRO351**
WFRO330	**WFRO354**
WFRO333	**WFRO357**
WFRO336	**WFRO360**
WFRO339	**WFRO363**
WFRO342	**WFRO366**
WFRO345	

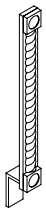

Maximum 40½" High

Cherry, Hickory, Maple, Oak, Walnut	**Cherry, Hickory, Maple, Oak, Walnut**
34½" high	40½" high
MBFRO3	**MBFRO3T**

Cherry, Hickory, Maple, Oak, Walnut	**Cherry, Hickory, Maple, Oak, Walnut**
MUFRO381	**MUFRO390**
MUFRO384	**MUFRO393**
MUFRO387	**MUFRO396**
	MUFRO3102
	MUFRO3108
	MUFRO3114
	MUFRO3120

© Copyright StarMark Cabinetry FEBRUARY 2022

Block 11320 Filler Column Block

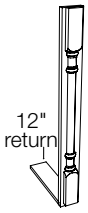

Maximum 66" High

DESIGN CONSIDERATIONS

2" Wide

- Both long edges and face are finished
- Wall fillers (WF) have a 12" return to wall.
- CLBBL attached to top and bottom of filler. Moulding attached in between.
- Use Cherry for Alder cabinetry.
- Column block centered horizontally on filler

HOW TO ORDER

- Specify rope (**LTROPE**), reeded (**CLREED**), or plain moulding (**CLPLN**)
- To modify dimensions, use **ACMOD** in Block 9085. Specify dimensions in special info.
- Pricing P-333

Cherry, Hickory, Maple, Oak, Walnut
WFCLMB224
WFCLMB227
WFCLMB230
WFCLMB233
WFCLMB236
WFCLMB239
WFCLMB242
WFCLMB245

Cherry, Hickory, Maple, Oak, Walnut
WFCLMB248
WFCLMB251
WFCLMB254
WFCLMB257
WFCLMB260
WFCLMB263
WFCLMB266

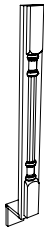

Maximum 40½" High

Cherry, Hickory, Maple, Oak, Walnut
34½" high
MBFCLMB2

Cherry, Hickory, Maple, Oak, Walnut
40½" high
MBFCLMB2T

Cherry, Hickory, Maple, Oak, Walnut
MUFCLMB281
MUFCLMB284
MUFCLMB287

Cherry, Hickory, Maple, Oak, Walnut
MUFCLMB290
MUFCLMB293
MUFCLMB296
MUFCMB2102
MUFCMB2108
MUFCMB2114
MUFCMB2120

Block 11330 Filler Column Block

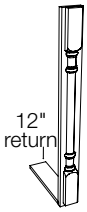

Maximum 66" High

DESIGN CONSIDERATIONS

3" Wide

- Both long edges and face are finished
- Wall fillers (WF) have a 12" return to wall.
- CLBBL attached to top and bottom of filler. Moulding attached in between.
- Use Cherry for Alder cabinetry.
- Column block centered horizontally on filler

HOW TO ORDER

- Specify rope (**LTROPE**), reeded (**CLREED**), or plain moulding (**CLPLN**)
- To modify dimensions, use **ACMOD** in Block 9085. Specify dimensions in special info.
- Pricing P-333

Cherry, Hickory, Maple, Oak, Walnut
WFCLMB324
WFCLMB327
WFCLMB330
WFCLMB333
WFCLMB336
WFCLMB339
WFCLMB342
WFCLMB345

Cherry, Hickory, Maple, Oak, Walnut
WFCLMB348
WFCLMB351
WFCLMB354
WFCLMB357
WFCLMB360
WFCLMB363
WFCLMB366

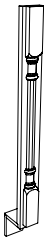

Maximum 40½" High

Cherry, Hickory, Maple, Oak, Walnut
34½" high
MBFCLMB3

Cherry, Hickory, Maple, Oak, Walnut
40½" high
MBFCLMB3T

Cherry, Hickory, Maple, Oak, Walnut
MUFCLMB381
MUFCLMB384
MUFCLMB387

Cherry, Hickory, Maple, Oak, Walnut
MUFCLMB390
MUFCLMB393
MUFCLMB396
MUFCMB3102
MUFCMB3108
MUFCMB3114
MUFCMB3120

© Copyright StarMark Cabinetry **FEBRUARY 2022**

Block 11340 Filler Cap

DESIGN CONSIDERATIONS

- Both long edges, both short edges and face are finished
- To be placed on filler or extended stile
- Filler cap has a ¼" reveal on each side
- The top and bottom reveal is consistent with a full height door with the same overlay.

HOW TO ORDER

- To modify dimensions, use **ACMOD** in Block 9085. Specify dimensions in special info.
- Pricing P-334

FC324	**FC366**	**FC624**	**FC666**
FC327	**FC376**	**FC627**	**FC676**
FC3275	**FC377**	**FC6275**	**FC677**
FC330	**FC379**	**FC630**	**FC679**
FC3305	**FC380**	**FC6305**	**FC680**
FC333	**FC382**	**FC633**	**FC682**
FC3345	**FC383**	**FC6345**	**FC683**
FC336	**FC385**	**FC636**	**FC685**
FC3365	**FC386**	**FC6365**	**FC686**
FC339	**FC388**	**FC639**	**FC688**
FC342	**FC389**	**FC642**	**FC689**
FC345	**FC391**	**FC645**	**FC691**
FC348	**FC392**	**FC648**	**FC692**
FC351	**FC3102**	**FC651**	**FC6102**
FC354	**FC3108**	**FC654**	**FC6108**
FC357	**FC3114**	**FC657**	**FC6114**
FC360	**FC3120**	**FC660**	**FC6120**
FC363		**FC663**	

Block 11350 Fluted Filler Cap with Chamfered Edge

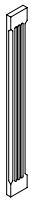

Maximum 66" High

DESIGN CONSIDERATIONS

2⅞" and 5⅞" Wide

- Both long edges, both short edges and face are finished
- To be placed on filler or extended stile
- Filler cap has a 1/16" reveal on each side
- Base and Utility to match Full Height door face frame height unless specified otherwise.

HOW TO ORDER

- To modify dimensions, use **ACMOD** in Block 9085. Specify dimensions in special info.
- Pricing P-334

WFFCC324	**WFFCC624**
WFFCC327	**WFFCC627**
WFFCC330	**WFFCC630**
WFFCC333	**WFFCC633**
WFFCC336	**WFFCC636**
WFFCC339	**WFFCC639**
WFFCC342	**WFFCC642**
WFFCC345	**WFFCC645**
WFFCC348	**WFFCC648**
WFFCC351	**WFFCC651**
WFFCC354	**WFFCC654**
WFFCC357	**WFFCC657**
WFFCC360	**WFFCC660**
WFFCC363	**WFFCC663**
WFFCC366	**WFFCC666**

Maximum 40½" High

BFFCC3275	**BFFCC6275**
BFFCC3305	**BFFCC6305**
BFFCC3345	**BFFCC6345**
BFFCC3365	**BFFCC6365**

UFFCC376	**UFFCC385**	**UFFCC676**	**UFFCC685**
UFFCC377	**UFFCC386**	**UFFCC677**	**UFFCC686**
UFFCC379	**UFFCC388**	**UFFCC679**	**UFFCC688**
UFFCC380	**UFFCC389**	**UFFCC680**	**UFFCC689**
UFFCC382	**UFFCC391**	**UFFCC682**	**UFFCC691**
UFFCC383	**UFFCC392**	**UFFCC683**	**UFFCC692**
	UFFCC3102		**UFFCC6102**
	UFFCC3108		**UFFCC6108**
	UFFCC3114		**UFFCC6114**
	UFFCC3120		**UFFCC6120**

© Copyright StarMark Cabinetry **FEBRUARY 2022**

Block 11360 Fluted Filler Cap with Chamfered Edge and Round Onlay Blanks

Maximum 66" High

DESIGN CONSIDERATIONS

2⅞" Wide

- Both long edges, both short edges and face are finished
- To be placed on filler or extended stile
- Onlays are sold separately
- Filler cap has a 1/16" reveal on each side
- Base and Utility to match Full Height Door face frame height unless specified otherwise.

HOW TO ORDER

- See block 9180 for onlay attachment
- To modify dimensions, use **ACMOD** in Block 9085. Specify dimensions in special info.
- Pricing P-335

WFFCCO324
WFFCCO327
WFFCCO330
WFFCCO333
WFFCCO336
WFFCCO339
WFFCCO342
WFFCCO345
WFFCCO348
WFFCCO351
WFFCCO354
WFFCCO357
WFFCCO360
WFFCCO363
WFFCCO366

Maximum 40½" High

BFFCCO3275
BFFCCO3305
BFFCCO3345
BFFCCO3365

UFFCCO376
UFFCCO377
UFFCCO379
UFFCCO380
UFFCCO382
UFFCCO383
UFFCCO385
UFFCCO386
UFFCCO388
UFFCCO389
UFFCCO391
UFFCCO392
UFFCCO3102
UFFCCO3108
UFFCCO3114
UFFCCO3120

Block 11370 Corner Filler

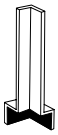

DESIGN CONSIDERATIONS

- Base (FBC) and Utility (UWC) corner filler have toe kick attached
- Wall (FWC) and Utility (UWC) corner filler nomenclature reads width (3"x3") by height.
- Base (FBC) corner filler is 34½" high.
- Base Tall (FBC__T) corner filler is 40½" high.

HOW TO ORDER

- To modify dimensions, use **ACMOD** in Block 9085. Specify dimensions in special info.
- Pricing P-335

FWC3-324
FWC3-327
FWC3-330
FWC3-333
FWC3-336
FWC3-339
FWC3-342
FWC3-345
FWC3-348
FWC3-351
FWC3-354
FWC3-357
FWC3-360
FWC3-363
FWC3-366

FBC3-3
FBC3-3T

UWC3-376
UWC3-379
UWC3-382
UWC3-385
UWC3-388
UWC3-391

© Copyright StarMark Cabinetry FEBRUARY 2022

Block 11380 End Panel

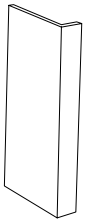

Maximum 36" Deep Maximum 66" High

DESIGN CONSIDERATIONS

- 1½", 3", 4", 5" or 6" front stile
- No floor return to wall
- Finished end is veneer
- Interior side is birch melamine
- Wall (WEP) end panel nomenclature reads width by height.
- ¼" face frame lip with ¾" veneer panel unless Flush or Furniture end is specified and upcharged.

HOW TO ORDER

- Use STIN charge (block 9480) to finish the inside of panel.
- To modify dimensions, use **ACMOD** in Block 9085. Specify dimensions in special info.
- Pricing P-336

1½"x12" deep	3"x12" deep	4"x12" deep	5"x12" deep	6"x12" deep
WEP1.524L	**WEP324L**	**WEP424L**	**WEP524L**	**WEP624L**
WEP1.524R	**WEP324R**	**WEP424R**	**WEP524R**	**WEP624R**
WEP1.527L	**WEP327L**	**WEP427L**	**WEP527L**	**WEP627L**
WEP1.527R	**WEP327R**	**WEP427R**	**WEP527R**	**WEP627R**
WEP1.530L	**WEP330L**	**WEP430L**	**WEP530L**	**WEP630L**
WEP1.530R	**WEP330R**	**WEP430R**	**WEP530R**	**WEP630R**
WEP1.533L	**WEP333L**	**WEP433L**	**WEP533L**	**WEP633L**
WEP1.533R	**WEP333R**	**WEP433R**	**WEP533R**	**WEP633R**
WEP1.536L	**WEP336L**	**WEP436L**	**WEP536L**	**WEP636L**
WEP1.536R	**WEP336R**	**WEP436R**	**WEP536R**	**WEP636R**
WEP1.539L	**WEP339L**	**WEP439L**	**WEP539L**	**WEP639L**
WEP1.539R	**WEP339R**	**WEP439R**	**WEP539R**	**WEP639R**
WEP1.542L	**WEP342L**	**WEP442L**	**WEP542L**	**WEP642L**
WEP1.542R	**WEP342R**	**WEP442R**	**WEP542R**	**WEP642R**
WEP1.545L	**WEP345L**	**WEP445L**	**WEP545L**	**WEP645L**
WEP1.545R	**WEP345R**	**WEP445R**	**WEP545R**	**WEP645R**
WEP1.548L	**WEP348L**	**WEP448L**	**WEP548L**	**WEP648L**
WEP1.548R	**WEP348R**	**WEP448R**	**WEP548R**	**WEP648R**
WEP1.551L	**WEP351L**	**WEP451L**	**WEP551L**	**WEP651L**
WEP1.551R	**WEP351R**	**WEP451R**	**WEP551R**	**WEP651R**
WEP1.554L	**WEP354L**	**WEP454L**	**WEP554L**	**WEP654L**
WEP1.554R	**WEP354R**	**WEP454R**	**WEP554R**	**WEP654R**
WEP1.557L	**WEP357L**	**WEP457L**	**WEP557L**	**WEP657L**
WEP1.557R	**WEP357R**	**WEP457R**	**WEP557R**	**WEP657R**
WEP1.560L	**WEP360L**	**WEP460L**	**WEP560L**	**WEP660L**
WEP1.560R	**WEP360R**	**WEP460R**	**WEP560R**	**WEP660R**
WEP1.563L	**WEP363L**	**WEP463L**	**WEP563L**	**WEP663L**
WEP1.563R	**WEP363R**	**WEP463R**	**WEP563R**	**WEP663R**
WEP1.566L	**WEP366L**	**WEP466L**	**WEP566L**	**WEP666L**
WEP1.566R	**WEP366R**	**WEP466R**	**WEP566R**	**WEP666R**

Block 11380 End Panel continued

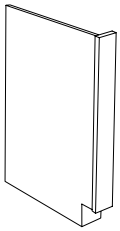

Base/Vanity

DESIGN CONSIDERATIONS

- 1½", 3", 4", 5" or 6" front stile
- End panel notched for toe
- Finished end is veneer
- Interior side is birch melamine
- Vanity (VEP) end panels are 31½" high
- Base (BEP) and Vanity Tall (VEP_T) end panels are 34½" high
- Base Tall (BEP_T) end panels are 40½" high
- ¼" face frame lip with ¾" veneer panel unless Flush or Furniture end is specified and upcharged.

HOW TO ORDER

- Use STIN charge (block 9480) to finish the inside of panel.
- To modify dimensions, use **ACMOD** in Block 9085. Specify dimensions in special info.
- Illustration shows LEFT
- Wide bottom rail is available at no extra charge. To order, add suffix WBR.
- Pricing P-336

24" deep	24" deep	21" deep	21" deep
BEP1.5L	**BEP1.5TL**	**VEP1.5L**	**VEP1.5TL**
BEP1.5R	**BEP1.5TR**	**VEP1.5R**	**VEP1.5TR**
BEP3L	**BEP3TL**	**VEP3L**	**VEP3TL**
BEP3R	**BEP3TR**	**VEP3R**	**VEP3TR**
BEP4L	**BEP4TL**	**VEP4L**	**VEP4TL**
BEP4R	**BEP4TR**	**VEP4R**	**VEP4TR**
BEP5L	**BEP5TL**	**VEP5L**	**VEP5TL**
BEP5R	**BEP5TR**	**VEP5R**	**VEP5TR**
BEP6L	**BEP6TL**	**VEP6L**	**VEP6TL**
BEP6R	**BEP6TR**	**VEP6R**	**VEP6TR**

RBEP 81"-96" is available up to 36" deep and RBEP120 is available up to 30" deep.

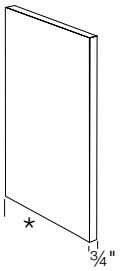

DESIGN CONSIDERATIONS

¾" material

- Edge banded front
- Both sides of this panel are finished veneer

HOW TO ORDER

- To modify dimensions, use **ACMOD** in Block 9085. Specify dimensions in special info.
- Pricing P-336

12" Deep	24" Deep
RWEP.7581	**RBEP.7581**
RWEP.7584	**RBEP.7584**
RWEP.7587	**RBEP.7587**
RWEP.7590	**RBEP.7590**
RWEP.7593	**RBEP.7593**
RWEP.7596	**RBEP.7596**
RWEP.75120	**RBEP.75120**

© Copyright StarMark Cabinetry FEBRUARY 2022

Block 11380 End Panel continued

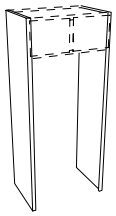

Maximum 36" Deep Maximum 96" High

DESIGN CONSIDERATIONS

- 1½" or 3" wide front stile
- Front stile and end panel construction
- Interior side is birch melamine
- Finished end is veneer
- Wide Bottom Rail (WBR) standard
- RWEP and RBEP nomenclature reads width (1½" or 3") by height
- ¼" face frame lip with ¾" veneer panel unless Flush or Furniture end is specified and upcharged.

HOW TO ORDER

- Use STIN charge (block 9480) to finish the inside of panel.
- To modify dimensions, use **ACMOD** in Block 9085. Specify dimensions in special info.
- Pricing P-337

12" Deep	24" Deep
RWEP1.581L	**RBEP1.581L**
RWEP1.581R	**RBEP1.581R**
RWEP1.584L	**RBEP1.584L**
RWEP1.584R	**RBEP1.584R**
RWEP1.587L	**RBEP1.587L**
RWEP1.587R	**RBEP1.587R**
RWEP1.590L	**RBEP1.590L**
RWEP1.590R	**RBEP1.590R**
RWEP1.593L	**RBEP1.593L**
RWEP1.593R	**RBEP1.593R**
RWEP1.596L	**RBEP1.596L**
RWEP1.596R	**RBEP1.596R**
RWEP15120L	**RBEP15120L**
RWEP15120R	**RBEP15120R**
RWEP381L	**RBEP381L**
RWEP381R	**RBEP381R**
RWEP384L	**RBEP384L**
RWEP384R	**RBEP384R**
RWEP387L	**RBEP387L**
RWEP387R	**RBEP387R**
RWEP390L	**RBEP390L**
RWEP390R	**RBEP390R**
RWEP393L	**RBEP393L**
RWEP393R	**RBEP393R**
RWEP396L	**RBEP396L**
RWEP396R	**RBEP396R**
RWEP3120L	**RBEP3120L**
RWEP3120R	**RBEP3120R**

Block 11382 IMDP End Panel

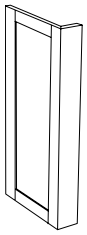

Maximum 36" Deep Maximum 66" High

DESIGN CONSIDERATIONS

- 1½", 3", 4", 5" or 6" front stile
- No floor return to wall
- Interior side is birch melamine
- Wall (WIMP) end panel nomenclature reads width by height.
- Authentic door panel built into frame does not align with door on front of adjacent cabinets.
- Not available with mitered or slab door styles.

HOW TO ORDER

- To modify dimensions, use **ACMOD** in Block 9085. Specify dimensions in special info.
- Pricing P-337-338

1½"x12" deep	3"x12" deep	4"x12" deep	5"x12" deep	6"x12" deep
WIMP1524L	**WIMP324L**	**WIMP424L**	**WIMP524L**	**WIMP624L**
WIMP1524R	**WIMP324R**	**WIMP424R**	**WIMP524R**	**WIMP624R**
WIMP1527L	**WIMP327L**	**WIMP427L**	**WIMP527L**	**WIMP627L**
WIMP1527R	**WIMP327R**	**WIMP427R**	**WIMP527R**	**WIMP627R**
WIMP1530L	**WIMP330L**	**WIMP430L**	**WIMP530L**	**WIMP630L**
WIMP1530R	**WIMP330R**	**WIMP430R**	**WIMP530R**	**WIMP630R**
WIMP1533L	**WIMP333L**	**WIMP433L**	**WIMP533L**	**WIMP633L**
WIMP1533R	**WIMP333R**	**WIMP433R**	**WIMP533R**	**WIMP633R**
WIMP1536L	**WIMP336L**	**WIMP436L**	**WIMP536L**	**WIMP636L**
WIMP1536R	**WIMP336R**	**WIMP436R**	**WIMP536R**	**WIMP636R**
WIMP1539L	**WIMP339L**	**WIMP439L**	**WIMP539L**	**WIMP639L**
WIMP1539R	**WIMP339R**	**WIMP439R**	**WIMP539R**	**WIMP639R**
WIMP1542L	**WIMP342L**	**WIMP442L**	**WIMP542L**	**WIMP642L**
WIMP1542R	**WIMP342R**	**WIMP442R**	**WIMP542R**	**WIMP642R**
WIMP1545L	**WIMP345L**	**WIMP445L**	**WIMP545L**	**WIMP645L**
WIMP1545R	**WIMP345R**	**WIMP445R**	**WIMP545R**	**WIMP645R**
WIMP1548L	**WIMP348L**	**WIMP448L**	**WIMP548L**	**WIMP648L**
WIMP1548R	**WIMP348R**	**WIMP448R**	**WIMP548R**	**WIMP648R**
WIMP1551L	**WIMP351L**	**WIMP451L**	**WIMP551L**	**WIMP651L**
WIMP1551R	**WIMP351R**	**WIMP451R**	**WIMP551R**	**WIMP651R**
WIMP1554L	**WIMP354L**	**WIMP454L**	**WIMP554L**	**WIMP654L**
WIMP1554R	**WIMP354R**	**WIMP454R**	**WIMP554R**	**WIMP654R**
WIMP1557L	**WIMP357L**	**WIMP457L**	**WIMP557L**	**WIMP657L**
WIMP1557R	**WIMP357R**	**WIMP457R**	**WIMP557R**	**WIMP657R**
WIMP1560L	**WIMP360L**	**WIMP460L**	**WIMP560L**	**WIMP660L**
WIMP1560R	**WIMP360R**	**WIMP460R**	**WIMP560R**	**WIMP660R**
WIMP1563L	**WIMP363L**	**WIMP463L**	**WIMP563L**	**WIMP663L**
WIMP1563R	**WIMP363R**	**WIMP463R**	**WIMP563R**	**WIMP663R**
WIMP1566L	**WIMP366L**	**WIMP466L**	**WIMP566L**	**WIMP666L**
WIMP1566R	**WIMP366R**	**WIMP466R**	**WIMP566R**	**WIMP666R**

© Copyright StarMark Cabinetry FEBRUARY 2022

Block 11382 IMDP End Panel continued I

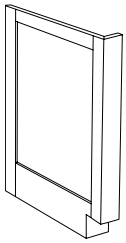

Base/Vanity

DESIGN CONSIDERATIONS

- 1½", 3", 4", 5" or 6" front stile
- End panel notched for toe
- Interior side is birch melamine
- Vanity (VIMP) end panels are 31½" high
- Base (BIMP) and Vanity Tall (VIMP_T) end panels are 34½" high
- Base Tall (BIMP_T) end panels are 40½" high
- Authentic door panel built into frame does not align with door on front of adjacent cabinets.
- Not available with mitered or slab door styles.
- Cabinets greater than 24" in depth will receive two panels.

HOW TO ORDER

- Illustration shows LEFT
- Wide bottom rail is available at no extra charge. To order, add suffix WBR.
- To modify dimensions, use **ACMOD** in Block 9085. Specify dimensions in special info.
- Pricing P-338

24" deep	24" deep	21" deep	21" deep
BIMP15L	**BIMP15TL**	**VIMP15L**	**VIMP15TL**
BIMP15R	**BIMP15TR**	**VIMP15R**	**VIMP15TR**
BIMP3L	**BIMP3TL**	**VIMP3L**	**VIMP3TL**
BIMP3R	**BIMP3TR**	**VIMP3R**	**VIMP3TR**
BIMP4L	**BIMP4TL**	**VIMP4L**	**VIMP4TL**
BIMP4R	**BIMP4TR**	**VIMP4R**	**VIMP4TR**
BIMP5L	**BIMP5TL**	**VIMP5L**	**VIMP5TL**
BIMP5R	**BIMP5TR**	**VIMP5R**	**VIMP5TR**
BIMP6L	**BIMP6TL**	**VIMP6L**	**VIMP6TL**
BIMP6R	**BIMP6TR**	**VIMP6R**	**VIMP6TR**

Block 11382 IMDP End Panel continued I

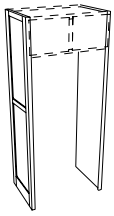

Maximum 36" Deep Maximum 96" High

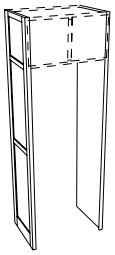

Maximum 36" Deep Maximum 120" High

DESIGN CONSIDERATIONS

- 1½" or 3" wide front stile
- Front stile and end panel construction
- Interior side is birch melamine
- Authentic door panel built into frame does not align with door on front of adjacent cabinets
- Not available with mitered or slab door styles
- Cabinets greater than 24" in depth will receive two panels
- Wide Bottom Rail (WBR) standard
- TIMP and UIMP nomenclature reads width (1½" or 3") by height

HOW TO ORDER

- To modify dimensions, use **ACMOD** in Block 9085. Specify dimensions in special info.
- Pricing P-338

12" Deep	12" Deep
TIMP1581L	**TIMP381L**
TIMP1581R	**TIMP381R**
TIMP1584L	**TIMP384L**
TIMP1584R	**TIMP384R**
TIMP1587L	**TIMP387L**
TIMP1587R	**TIMP387R**
TIMP1590L	**TIMP390L**
TIMP1590R	**TIMP390R**
TIMP1593L	**TIMP393L**
TIMP1593R	**TIMP393R**
TIMP1596L	**TIMP396L**
TIMP1596R	**TIMP396R**
TIMP15120L	**TIMP3120L**
TIMP15120R	**TIMP3120R**

24" Deep	24" Deep
UIMP1581L	**UIMP381L**
UIMP1581R	**UIMP381R**
UIMP1584L	**UIMP384L**
UIMP1584R	**UIMP384R**
UIMP1587L	**UIMP387L**
UIMP1587R	**UIMP387R**
UIMP1590L	**UIMP390L**
UIMP1590R	**UIMP390R**
UIMP1593L	**UIMP393L**
UIMP1593R	**UIMP393R**
UIMP1596L	**UIMP396L**
UIMP1596R	**UIMP396R**
UIMP15120L	**UIMP3120L**
UIMP15120R	**UIMP3120R**

UIMP 81"-96" is available up to 36" deep and UIMP120 is available up to 30" deep.

© Copyright StarMark Cabinetry **FEBRUARY 2022**

Block 11384 FFD End Panel

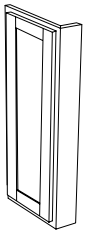

Maximum 36" Deep Maximum 66" High

DESIGN CONSIDERATIONS

- 1½", 3", 4", 5" or 6" front stile
- Fixed full height door on panel end
- Wall (WXFD) end panel nomenclature reads width by height.
- Not available with a Double Return.

HOW TO ORDER

- To modify dimensions, use **ACMOD** in Block 9085. Specify dimensions in special info.
- Pricing P-339

1½"x12" deep	3"x12" deep	4"x12" deep	5"x12" deep	6"x12" deep
WXFD1524L	**WXFD324L**	**WXFD424L**	**WXFD524L**	**WXFD624L**
WXFD1524R	**WXFD324R**	**WXFD424R**	**WXFD524R**	**WXFD624R**
WXFD1527L	**WXFD327L**	**WXFD427L**	**WXFD527L**	**WXFD627L**
WXFD1527R	**WXFD327R**	**WXFD427R**	**WXFD527R**	**WXFD627R**
WXFD1530L	**WXFD330L**	**WXFD430L**	**WXFD530L**	**WXFD630L**
WXFD1530R	**WXFD330R**	**WXFD430R**	**WXFD530R**	**WXFD630R**
WXFD1533L	**WXFD333L**	**WXFD433L**	**WXFD533L**	**WXFD633L**
WXFD1533R	**WXFD333R**	**WXFD433R**	**WXFD533R**	**WXFD633R**
WXFD1536L	**WXFD336L**	**WXFD436L**	**WXFD536L**	**WXFD636L**
WXFD1536R	**WXFD336R**	**WXFD436R**	**WXFD536R**	**WXFD636R**
WXFD1539L	**WXFD339L**	**WXFD439L**	**WXFD539L**	**WXFD639L**
WXFD1539R	**WXFD339R**	**WXFD439R**	**WXFD539R**	**WXFD639R**
WXFD1542L	**WXFD342L**	**WXFD442L**	**WXFD542L**	**WXFD642L**
WXFD1542R	**WXFD342R**	**WXFD442R**	**WXFD542R**	**WXFD642R**
WXFD1545L	**WXFD345L**	**WXFD445L**	**WXFD545L**	**WXFD645L**
WXFD1545R	**WXFD345R**	**WXFD445R**	**WXFD545R**	**WXFD645R**
WXFD1548L	**WXFD348L**	**WXFD448L**	**WXFD548L**	**WXFD648L**
WXFD1548R	**WXFD348R**	**WXFD448R**	**WXFD548R**	**WXFD648R**
WXFD1551L	**WXFD351L**	**WXFD451L**	**WXFD551L**	**WXFD651L**
WXFD1551R	**WXFD351R**	**WXFD451R**	**WXFD551R**	**WXFD651R**
WXFD1554L	**WXFD354L**	**WXFD454L**	**WXFD554L**	**WXFD654L**
WXFD1554R	**WXFD354R**	**WXFD454R**	**WXFD554R**	**WXFD654R**
WXFD1557L	**WXFD357L**	**WXFD457L**	**WXFD557L**	**WXFD657L**
WXFD1557R	**WXFD357R**	**WXFD457R**	**WXFD557R**	**WXFD657R**
WXFD1560L	**WXFD360L**	**WXFD460L**	**WXFD560L**	**WXFD660L**
WXFD1560R	**WXFD360R**	**WXFD460R**	**WXFD560R**	**WXFD660R**
WXFD1563L	**WXFD363L**	**WXFD463L**	**WXFD563L**	**WXFD663L**
WXFD1563R	**WXFD363R**	**WXFD463R**	**WXFD563R**	**WXFD663R**
WXFD1566L	**WXFD366L**	**WXFD466L**	**WXFD566L**	**WXFD666L**
WXFD1566R	**WXFD366R**	**WXFD466R**	**WXFD566R**	**WXFD666R**

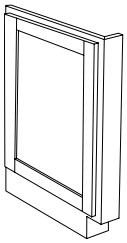

Base/Vanity

DESIGN CONSIDERATIONS

- 1½", 3", 4", 5" or 6" front stile
- End panel notched for toe
- Fixed full height door on panel end
- Depths over 24" will receive butt fixed doors
- Vanity (VXFD) end panels are 31½" high
- Base (BXFD) and Vanity Tall (VXFD_T) end panels are 34½" high
- Base Tall (BXFD_T) end panels are 40½" high
- Not available with a Double Return.

HOW TO ORDER

- Illustration shows LEFT
- Wide bottom rail is available at no extra charge. To order, add suffix WBR.
- To modify dimensions, use **ACMOD** in Block 9085. Specify dimensions in special info.
- Pricing P-339

24" deep	24" deep	21" deep	21" deep
BXFD15L	**BXFD15TL**	**VXFD15L**	**VXFD15TL**
BXFD15R	**BXFD15TR**	**VXFD15R**	**VXFD15TR**
BXFD3L	**BXFD3TL**	**VXFD3L**	**VXFD3TL**
BXFD3R	**BXFD3TR**	**VXFD3R**	**VXFD3TR**
BXFD4L	**BXFD4TL**	**VXFD4L**	**VXFD4TL**
BXFD4R	**BXFD4TR**	**VXFD4R**	**VXFD4TR**
BXFD5L	**BXFD5TL**	**VXFD5L**	**VXFD5TL**
BXFD5R	**BXFD5TR**	**VXFD5R**	**VXFD5TR**
BXFD6L	**BXFD6TL**	**VXFD6L**	**VXFD6TL**
BXFD6R	**BXFD6TR**	**VXFD6R**	**VXFD6TR**

Block 11384 FFD End Panel continued

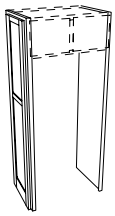

Maximum 36" Deep Maximum 96" High

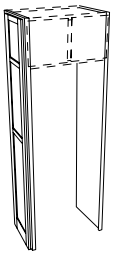

Maximum 36" Deep Maximum 120" High

DESIGN CONSIDERATIONS

- 1½" or 3" wide front stile
- Front stile and end panel construction
- Depths over 24" will receive butt fixed doors
- Wide Bottom Rail (WBR) standard
- TXFD and UXFD nomenclature reads width (1½" or 3") by height
- Not available with a Double Return.

HOW TO ORDER

- To modify dimensions, use **ACMOD** in Block 9085. Specify dimensions in special info.
- Pricing P-339

12" Deep	12" Deep
TXFD1581L	**TXFD381L**
TXFD1581R	**TXFD381R**
TXFD1584L	**TXFD384L**
TXFD1584R	**TXFD384R**
TXFD1587L	**TXFD387L**
TXFD1587R	**TXFD387R**
TXFD1590L	**TXFD390L**
TXFD1590R	**TXFD390R**
TXFD1593L	**TXFD393L**
TXFD1593R	**TXFD393R**
TXFD1596L	**TXFD396L**
TXFD1596R	**TXFD396R**
TXFD15120L	**TXFD3120L**
TXFD15120R	**TXFD3120R**

24" Deep	24" Deep
UXFD1581L	**UXFD381L**
UXFD1581R	**UXFD381R**
UXFD1584L	**UXFD384L**
UXFD1584R	**UXFD384R**
UXFD1587L	**UXFD387L**
UXFD1587R	**UXFD387R**
UXFD1590L	**UXFD390L**
UXFD1590R	**UXFD390R**
UXFD1593L	**UXFD393L**
UXFD1593R	**UXFD393R**
UXFD1596L	**UXFD396L**
UXFD1596R	**UXFD396R**
UXFD15120L	**UXFD3120L**
UXFD15120R	**UXFD3120R**

UXFD 81"-96" is available up to 36" deep and UXFD120 is available up to 30" deep.

© Copyright StarMark Cabinetry FEBRUARY 2022

HOW TO ORDER A DOUBLE RETURN

Items in blocks 11500, 11502, 11510, 11520, 11530, 11540, 11560, 11570 and 11610 can be ordered with a double return. Double Return not available with MDP or FFD. To order, specify **Double Return** in the Special Information column. Add 50% to the cost of the panel.

Block 11500 Panel Box Plain

Wall **Base/Utility/Vanity**

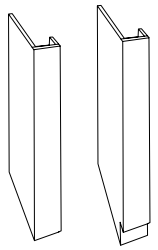

- Maximum 36″ Deep
- Maximum Heights
Wall 66″
Base 40½″
Utility 96″
Vanity 34½″

DESIGN CONSIDERATIONS

2″, 3″, 4″, 5″ or 6″ Wide

- Flush finished veneer end panel
- Panel return is 4″
- Wall (WBFBPL) and Utility UBFBPL) nomenclature reads width by height
- Always built with ½″ veneer panels

HOW TO ORDER

- Specify **Depth**
- To modify dimensions, use **ACMOD** in Block 9085. Specify dimensions in special info.
- Order Left or Right by replacing * at the end of nomenclature with **L** or **R**
- Illustration shows LEFT
- Wide Bottom Rail is available at no extra charge. To order, add suffix **WBR**.
- Pricing P-340

WALL

2″ Wide	3″ Wide	4″ Wide	5″ Wide	6″ Wide
WBFBPL224*	**WBFBPL324***	**WBFBPL424***	**WBFBPL524***	**WBFBPL624***
WBFBPL227*	**WBFBPL327***	**WBFBPL427***	**WBFBPL527***	**WBFBPL627***
WBFBPL230*	**WBFBPL330***	**WBFBPL430***	**WBFBPL530***	**WBFBPL630***
WBFBPL233*	**WBFBPL333***	**WBFBPL433***	**WBFBPL533***	**WBFBPL633***
WBFBPL236*	**WBFBPL336***	**WBFBPL436***	**WBFBPL536***	**WBFBPL636***
WBFBPL239*	**WBFBPL339***	**WBFBPL439***	**WBFBPL539***	**WBFBPL639***
WBFBPL242*	**WBFBPL342***	**WBFBPL442***	**WBFBPL542***	**WBFBPL642***
WBFBPL245*	**WBFBPL345***	**WBFBPL445***	**WBFBPL545***	**WBFBPL645***
WBFBPL248*	**WBFBPL348***	**WBFBPL448***	**WBFBPL548***	**WBFBPL648***
WBFBPL251*	**WBFBPL351***	**WBFBPL451***	**WBFBPL551***	**WBFBPL651***
WBFBPL254*	**WBFBPL354***	**WBFBPL454***	**WBFBPL554***	**WBFBPL654***
WBFBPL257*	**WBFBPL357***	**WBFBPL457***	**WBFBPL557***	**WBFBPL657***
WBFBPL260*	**WBFBPL360***	**WBFBPL460***	**WBFBPL560***	**WBFBPL660***
WBFBPL263*	**WBFBPL363***	**WBFBPL463***	**WBFBPL563***	**WBFBPL663***
WBFBPL266*	**WBFBPL366***	**WBFBPL466***	**WBFBPL566***	**WBFBPL666***

BASE

34½″ high				
BBFBPL2*	**BBFBPL3***	**BBFBPL4***	**BBFBPL5***	**BBFBPL6***
40½″ high				
BBFBPL2T*	**BBFBPL3T***	**BBFBPL4T***	**BBFBPL5T***	**BBFBPL6T***

UTILITY

UBFBPL281*	**UBFBPL381***	**UBFBPL481***	**UBFBPL581***	**UBFBPL681***
UBFBPL284*	**UBFBPL384***	**UBFBPL484***	**UBFBPL584***	**UBFBPL684***
UBFBPL287*	**UBFBPL387***	**UBFBPL487***	**UBFBPL587***	**UBFBPL687***
UBFBPL290*	**UBFBPL390***	**UBFBPL490***	**UBFBPL590***	**UBFBPL690***
UBFBPL293*	**UBFBPL393***	**UBFBPL493***	**UBFBPL593***	**UBFBPL693***
UBFBPL296*	**UBFBPL396***	**UBFBPL496***	**UBFBPL596***	**UBFBPL696***
UBFPL2102*	**UBFPL3102***	**UBFPL4102***	**UBFPL5102***	**UBFPL6102***
UBFPL2108*	**UBFPL3108***	**UBFPL4108***	**UBFPL5108***	**UBFPL6108***
UBFPL2114*	**UBFPL3114***	**UBFPL4114***	**UBFPL5114***	**UBFPL6114***
UBFPL2120*	**UBFPL3120***	**UBFPL4120***	**UBFPL5120***	**UBFPL6120***

VANITY

31½″ high				
VBFBPL2*	**VBFBPL3***	**VBFBPL4***	**VBFBPL5***	**VBFBPL6***
34½″ high				
VBFBPL2T*	**VBFBPL3T***	**VBFBPL4T***	**VBFBPL5T***	**VBFBPL6T***

Block 11502 IMDP Panel Box Plain

Wall **Base/Utility/Vanity**

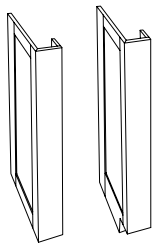

- Maximum 36″ Deep
- Maximum Heights
Wall 66″
Base 40½″
Utility 120″
Vanity 34½″

DESIGN CONSIDERATIONS

2″, 3″, 4″, 5″ or 6″ Wide

- Flush finished veneer end panel
- Base/Utility/Vanity end panel notched for toe
- Finished panel return is 4″
- Wall (WIMPPL) and Utility (UIMPPL) nomenclature reads width by height
- Authentic door panel built into frame does not align with door on front of adjacent cabinets.
- Not available with mitered or slab door styles.

HOW TO ORDER

- Specify **Depth**
- To modify dimensions, use **ACMOD** in Block 9085. Specify dimensions in special info.
- Order Left or Right by replacing * at the end of nomenclature with **L** or **R**
- Illustration shows LEFT
- Wide Bottom Rail is available at no extra charge. To order, add suffix **WBR**.
- Pricing P-341

WALL

2″ Wide	3″ Wide	4″ Wide	5″ Wide	6″ Wide
WIMPPL224*	**WIMPPL324***	**WIMPPL424***	**WIMPPL524***	**WIMPPL624***
WIMPPL227*	**WIMPPL327***	**WIMPPL427***	**WIMPPL527***	**WIMPPL627***
WIMPPL230*	**WIMPPL330***	**WIMPPL430***	**WIMPPL530***	**WIMPPL630***
WIMPPL233*	**WIMPPL333***	**WIMPPL433***	**WIMPPL533***	**WIMPPL633***
WIMPPL236*	**WIMPPL336***	**WIMPPL436***	**WIMPPL536***	**WIMPPL636***
WIMPPL239*	**WIMPPL339***	**WIMPPL439***	**WIMPPL539***	**WIMPPL639***
WIMPPL242*	**WIMPPL342***	**WIMPPL442***	**WIMPPL542***	**WIMPPL642***
WIMPPL245*	**WIMPPL345***	**WIMPPL445***	**WIMPPL545***	**WIMPPL645***
WIMPPL248*	**WIMPPL348***	**WIMPPL448***	**WIMPPL548***	**WIMPPL648***
WIMPPL251*	**WIMPPL351***	**WIMPPL451***	**WIMPPL551***	**WIMPPL651***
WIMPPL254*	**WIMPPL354***	**WIMPPL454***	**WIMPPL554***	**WIMPPL654***
WIMPPL257*	**WIMPPL357***	**WIMPPL457***	**WIMPPL557***	**WIMPPL657***
WIMPPL260*	**WIMPPL360***	**WIMPPL460***	**WIMPPL560***	**WIMPPL660***
WIMPPL263*	**WIMPPL363***	**WIMPPL463***	**WIMPPL563***	**WIMPPL663***
WIMPPL266*	**WIMPPL366***	**WIMPPL466***	**WIMPPL566***	**WIMPPL666***

BASE

34½″ high				
BIMPPL2*	**BIMPPL3***	**BIMPPL4***	**BIMPPL5***	**BIMPPL6***
40½″ high				
BIMPPL2T*	**BIMPPL3T***	**BIMPPL4T***	**BIMPPL5T***	**BIMPPL6T***

UTILITY

UIMPPL281*	**UIMPPL381***	**UIMPPL481***	**UIMPPL581***	**UIMPPL681***
UIMPPL284*	**UIMPPL384***	**UIMPPL484***	**UIMPPL584***	**UIMPPL684***
UIMPPL287*	**UIMPPL387***	**UIMPPL487***	**UIMPPL587***	**UIMPPL687***
UIMPPL290*	**UIMPPL390***	**UIMPPL490***	**UIMPPL590***	**UIMPPL690***
UIMPPL293*	**UIMPPL393***	**UIMPPL493***	**UIMPPL593***	**UIMPPL693***
UIMPPL296*	**UIMPPL396***	**UIMPPL496***	**UIMPPL596***	**UIMPPL696***
UIMPL2102*	**UIMPL3102***	**UIMPL4102***	**UIMPL5102***	**UIMPL6102***
UIMPL2108*	**UIMPL3108***	**UIMPL4108***	**UIMPL5108***	**UIMPL6108***
UIMPL2114*	**UIMPL3114***	**UIMPL4114***	**UIMPL5114***	**UIMPL6114***
UIMPL2120*	**UIMPL3120***	**UIMPL4120***	**UIMPL5120***	**UIMPL6120***

VANITY

31½″ high				
VIMPPL2*	**VIMPPL3***	**VIMPPL4***	**VIMPPL5***	**VIMPPL6***
34½″ high				
VIMPPL2T*	**VIMPPL3T***	**VIMPPL4T***	**VIMPPL5T***	**VIMPPL6T***

© Copyright StarMark Cabinetry **FEBRUARY 2022**

Block 11504 FFD Panel Box Plain

Wall **Base/Utility/Vanity**

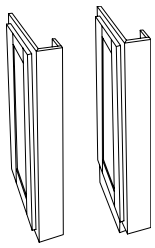

- Maximum 36" Deep
- Maximum Heights

Wall 66"
Base 40½"
Utility 120"
Vanity 34½"

DESIGN CONSIDERATIONS

2", 3", 4", 5" or 6" Wide

- Flush finished veneer end panel
- Base/Utility/Vanity end panel notched for toe
- Finished panel return is 4"
- Wall (WXFDPL) and Utility (UXFDPL) nomenclature reads width by height
- Full height fixed door applied to frame on wall, base and vanity panel box.
- Not available with a Double Return.
- See block 11502 for a panel with an available Double Return.
- Utility panel doors will align with UB/UW

HOW TO ORDER

- Specify **Depth**
- To modify dimensions, use **ACMOD** in Block 9085. Specify dimensions in special info.
- Order Left or Right by replacing * at the end of nomenclature with **L** or **R**
- Illustration shows LEFT
- Wide Bottom Rail is available at no extra charge. To order, add suffix **WBR**.
- Pricing P-342

WALL

2" Wide	3" Wide	4" Wide	5" Wide	6" Wide
WXFDPL224*	**WXFDPL324***	**WXFDPL424***	**WXFDPL524***	**WXFDPL624***
WXFDPL227*	**WXFDPL327***	**WXFDPL427***	**WXFDPL527***	**WXFDPL627***
WXFDPL230*	**WXFDPL330***	**WXFDPL430***	**WXFDPL530***	**WXFDPL630***
WXFDPL233*	**WXFDPL333***	**WXFDPL433***	**WXFDPL533***	**WXFDPL633***
WXFDPL236*	**WXFDPL336***	**WXFDPL436***	**WXFDPL536***	**WXFDPL636***
WXFDPL239*	**WXFDPL339***	**WXFDPL439***	**WXFDPL539***	**WXFDPL639***
WXFDPL242*	**WXFDPL342***	**WXFDPL442***	**WXFDPL542***	**WXFDPL642***
WXFDPL245*	**WXFDPL345***	**WXFDPL445***	**WXFDPL545***	**WXFDPL645***
WXFDPL248*	**WXFDPL348***	**WXFDPL448***	**WXFDPL548***	**WXFDPL648***
WXFDPL251*	**WXFDPL351***	**WXFDPL451***	**WXFDPL551***	**WXFDPL651***
WXFDPL254*	**WXFDPL354***	**WXFDPL454***	**WXFDPL554***	**WXFDPL654***
WXFDPL257*	**WXFDPL357***	**WXFDPL457***	**WXFDPL557***	**WXFDPL657***
WXFDPL260*	**WXFDPL360***	**WXFDPL460***	**WXFDPL560***	**WXFDPL660***
WXFDPL263*	**WXFDPL363***	**WXFDPL463***	**WXFDPL563***	**WXFDPL663***
WXFDPL266*	**WXFDPL366***	**WXFDPL466***	**WXFDPL566***	**WXFDPL666***

BASE

34½" high				
BXFDPL2*	**BXFDPL3***	**BXFDPL4***	**BXFDPL5***	**BXFDPL6***
40½" high				
BXFDPL2T*	**BXFDPL3T***	**BXFDPL4T***	**BXFDPL5T***	**BXFDPL6T***

UTILITY

UXFDPL281*	**UXFDPL381***	**UXFDPL481***	**UXFDPL581***	**UXFDPL681***
UXFDPL284*	**UXFDPL384***	**UXFDPL484***	**UXFDPL584***	**UXFDPL684***
UXFDPL287*	**UXFDPL387***	**UXFDPL487***	**UXFDPL587***	**UXFDPL687***
UXFDPL290*	**UXFDPL390***	**UXFDPL490***	**UXFDPL590***	**UXFDPL690***
UXFDPL293*	**UXFDPL393***	**UXFDPL493***	**UXFDPL593***	**UXFDPL693***
UXFDPL296*	**UXFDPL396***	**UXFDPL496***	**UXFDPL596***	**UXFDPL696***
UXFDP2102*	**UXFDP3102***	**UXFDP4102***	**UXFDP5102***	**UXFDP6102***
UXFDP2108*	**UXFDP3108***	**UXFDP4108***	**UXFDP5108***	**UXFDP6108***
UXFDP2114*	**UXFDP3114***	**UXFDP4114***	**UXFDP5114***	**UXFDP6114***
UXFDP2120*	**UXFDP3120***	**UXFDP4120***	**UXFDP5120***	**UXFDP6120***

VANITY

31½" high				
VXFDPL2*	**VXFDPL3***	**VXFDPL4***	**VXFDPL5***	**VXFDPL6***
34½" high				
VXFDPL2T*	**VXFDPL3T***	**VXFDPL4T***	**VXFDPL5T***	**VXFDPL6T***

Block 11510 Chamfered Panel Box

DESIGN CONSIDERATIONS

2" Wide

- Flush finished veneer end panel
- End panel is 2" wide
- Panel return is 4"
- Chamfer stops 2" from top and bottom
- Chamfer cut is ¾" deep from face of box
- Wall (WCPB) and Utility (UCPB) nomenclature reads width (2") by height
- Always built with ½" veneer panels

HOW TO ORDER

- Specify **Depth**
- To modify dimensions, use **ACMOD** in Block 9085. Specify dimensions in special info.
- Wide Bottom Rail is available at no extra charge for Base, Vanity and Utility. To order, add suffix **WBR**.
- Illustration shows LEFT
- Pricing P-343

INSTALLATION TIP

We suggest placing end panel flush with face frame

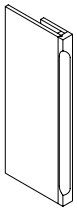

- Maximum 36" Deep
- Maximum Heights

Wall 66"
Base 40½"
Utility 96"
Vanity 34½"

WCPB224L	**WCPB239R**	**WCPB257L**
WCPB224R	**WCPB242L**	**WCPB257R**
WCPB227L	**WCPB242R**	**WCPB260L**
WCPB227R	**WCPB245L**	**WCPB260R**
WCPB230L	**WCPB245R**	**WCPB263L**
WCPB230R	**WCPB248L**	**WCPB263R**
WCPB233L	**WCPB248R**	**WCPB266L**
WCPB233R	**WCPB251L**	**WCPB266R**
WCPB236L	**WCPB251R**	
WCPB236R	**WCPB254L**	
WCPB239L	**WCPB254R**	

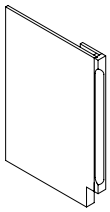

- Maximum 36" Deep
- Maximum 40½" High Base
- Maximum 34½" High Vanity

34½" high	31½" high	40½" high	34½" high
BCPB2L	**VCPB2L**	**BCPB2TL**	**VCPB2TL**
BCPB2R	**VCPB2R**	**BCPB2TR**	**VCPB2TR**

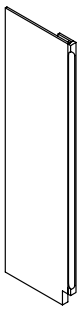

- Maximum 36" Deep

UCPB281L	**UCPB293L**	**UCPB2114L**
UCPB281R	**UCPB293R**	**UCPB2114R**
UCPB284L	**UCPB296L**	**UCPB2120L**
UCPB284R	**UCPB296R**	**UCPB2120R**
UCPB287L	**UCPB2102L**	
UCPB287R	**UCPB2102R**	
UCPB290L	**UCPB2108L**	
UCPB290R	**UCPB2108R**	

© Copyright StarMark Cabinetry FEBRUARY 2022

HOW TO ORDER A DOUBLE RETURN

Items in blocks 11500, 11502, 11510, 11520, 11530, 11540, 11560, 11570 and 11610 can be ordered with a double return. Double Return not available with MDP or FFD. To order, specify **Double Return** in the Special Information column. Add 50% to the cost of the panel.

Block 11520 Chamfered Panel Box with Fluting I

DESIGN CONSIDERATIONS

2" Wide

- Flush finished veneer end panel
- End panel is 2" wide
- Panel return is 4"
- Chamfer stops 2" from top and bottom
- Chamfer cut is ¾" deep from face of box
- Wall (WCFPB) and Utility (UCFPB) nomenclature reads width (2") by height
- Always built with ½" veneer panels

HOW TO ORDER

- Specify **Depth**
- To modify dimensions, use **ACMOD** in Block 9085. Specify dimensions in special info.
- Wide Bottom Rail is available at no extra charge for Base, Vanity and Utility. To order, add suffix **WBR**.
- Illustration shows LEFT
- Pricing P-344

INSTALLATION TIP

We suggest placing end panel flush with face frame

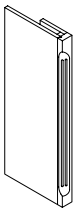

- Maximum 36" Deep
- Maximum 66" High

WCFPB224L	**WCFPB239R**	**WCFPB257L**
WCFPB224R	**WCFPB242L**	**WCFPB257R**
WCFPB227L	**WCFPB242R**	**WCFPB260L**
WCFPB227R	**WCFPB245L**	**WCFPB260R**
WCFPB230L	**WCFPB245R**	**WCFPB263L**
WCFPB230R	**WCFPB248L**	**WCFPB263R**
WCFPB233L	**WCFPB248R**	**WCFPB266L**
WCFPB233R	**WCFPB251L**	**WCFPB266R**
WCFPB236L	**WCFPB251R**	
WCFPB236R	**WCFPB254L**	
WCFPB239L	**WCFPB254R**	

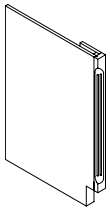

- Maximum 36" Deep
- Maximum 40½" High Base
- Maximum 34½" High Vanity

BCFPB2L	**VCFPB2L**	**BCFPB2TL**	**VCFPB2TL**
BCFPB2R	**VCFPB2R**	**BCFPB2TR**	**VCFPB2TR**

- Maximum 36" Deep

UCFPB281L	**UCFPB293L**	**UCFPB2114L**
UCFPB281R	**UCFPB293R**	**UCFPB2114R**
UCFPB284L	**UCFPB296L**	**UCFPB2120L**
UCFPB284R	**UCFPB296R**	**UCFPB2120R**
UCFPB287L	**UCFPB2102L**	
UCFPB287R	**UCFPB2102R**	
UCFPB290L	**UCFPB2108L**	
UCFPB290R	**UCFPB2108R**	

Block 11530 Fluted Panel Box with Blank for Capital I

DESIGN CONSIDERATIONS

3" and 6" Wide

- Flush finished veneer end panel
- Panel return is 4"
- Onlays are sold separately
- Wall (WFBBU) and Utility (UFBBU) nomenclature reads width (3" or 6") by height
- Always built with ½" veneer panels

HOW TO ORDER

- Specify **Depth**
- To modify dimensions, use **ACMOD** in Block 9085. Specify dimensions in special info.
- Wide Bottom Rail is available at no extra charge for Base, Vanity and Utility. To order, add suffix **WBR**.
- Illustration shows LEFT
- See block 9180 for onlay attachment
- Pricing P-344-345

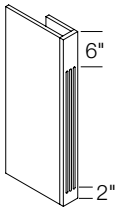

- Maximum 36" Deep
- Maximum 66" High

WFBBU324L	**WFBBU348L**	**WFBBU624L**	**WFBBU648L**
WFBBU324R	**WFBBU348R**	**WFBBU624R**	**WFBBU648R**
WFBBU327L	**WFBBU351L**	**WFBBU627L**	**WFBBU651L**
WFBBU327R	**WFBBU351R**	**WFBBU627R**	**WFBBU651R**
WFBBU330L	**WFBBU354L**	**WFBBU630L**	**WFBBU654L**
WFBBU330R	**WFBBU354R**	**WFBBU630R**	**WFBBU654R**
WFBBU333L	**WFBBU357L**	**WFBBU633L**	**WFBBU657L**
WFBBU333R	**WFBBU357R**	**WFBBU633R**	**WFBBU657R**
WFBBU336L	**WFBBU360L**	**WFBBU636L**	**WFBBU660L**
WFBBU336R	**WFBBU360R**	**WFBBU636R**	**WFBBU660R**
WFBBU339L	**WFBBU363L**	**WFBBU639L**	**WFBBU663L**
WFBBU339R	**WFBBU363R**	**WFBBU639R**	**WFBBU663R**
WFBBU342L	**WFBBU366L**	**WFBBU642L**	**WFBBU666L**
WFBBU342R	**WFBBU366R**	**WFBBU642R**	**WFBBU666R**
WFBBU345L		**WFBBU645L**	
WFBBU345R		**WFBBU645R**	

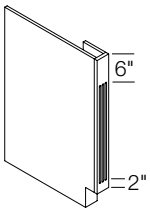

- Maximum 36" Deep
- Maximum 40½" High

BFBBU3L	**VFBBU3L**	**BFBBU6L**	**VFBBU6L**
BFBBU3R	**VFBBU3R**	**BFBBU6R**	**VFBBU6R**
BFBBU3TL	**VFBBU3TL**	**BFBBU6TL**	**VFBBU6TL**
BFBBU3TR	**VFBBU3TR**	**BFBBU6TR**	**VFBBU6TR**

- Maximum 36" Deep

UFBBU381L	**UFBBU396L**	**UFBBU681L**	**UFBBU696L**
UFBBU381R	**UFBBU396R**	**UFBBU681R**	**UFBBU696R**
UFBBU384L	**UFBBU3102L**	**UFBBU684L**	**UFBBU6102L**
UFBBU384R	**UFBBU3102R**	**UFBBU684R**	**UFBBU6102R**
UFBBU387L	**UFBBU3108L**	**UFBBU687L**	**UFBBU6108L**
UFBBU387R	**UFBBU3108R**	**UFBBU687R**	**UFBBU6108R**
UFBBU390L	**UFBBU3114L**	**UFBBU690L**	**UFBBU6114L**
UFBBU390R	**UFBBU3114R**	**UFBBU690R**	**UFBBU6114R**
UFBBU393L	**UFBBU3120L**	**UFBBU693L**	**UFBBU6120L**
UFBBU393R	**UFBBU3120R**	**UFBBU693R**	**UFBBU6120R**

© Copyright StarMark Cabinetry FEBRUARY 2022

Block 11540 Fluted Panel Box with Chamfered Edge and Round Onlay Blanks

DESIGN CONSIDERATIONS

3" Wide

- Flush finished veneer end panel
- Panel return is 4"
- 1" reveal at top for moulding application
- Onlays are sold separately
- Wall (WFBO) and Utility (UFBO) nomenclature reads width (3") by height
- Always built with ½" veneer panels

HOW TO ORDER

- Specify **Depth**
- To modify dimensions, use **ACMOD** in Block 9085. Specify dimensions in special info.
- Wide Bottom Rail is available at no extra charge for Base, Vanity and Utility. To order, add suffix **WBR**.
- To modify dimensions, use **ACMOD** in Block 9085. Specify dimensions in special info.
- Wide Bottom Rail is available at no extra charge for Base, Vanity and Utility. To order, add suffix **WBR**.
- Illustration shows LEFT
- See block 9180 for onlay attachment
- Pricing P-345

- Maximum 36" Deep
- Maximum 66" High

WFBO324L	**WFBO339L**	**WFBO354L**
WFBO324R	**WFBO339R**	**WFBO354R**
WFBO327L	**WFBO342L**	**WFBO357L**
WFBO327R	**WFBO342R**	**WFBO357R**
WFBO330L	**WFBO345L**	**WFBO360L**
WFBO330R	**WFBO345R**	**WFBO360R**
WFBO333L	**WFBO348L**	**WFBO363L**
WFBO333R	**WFBO348R**	**WFBO363R**
WFBO336L	**WFBO351L**	**WFBO366L**
WFBO336R	**WFBO351R**	**WFBO366R**

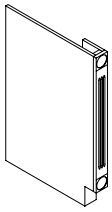

- Maximum 36" Deep
- Maximum 40½" High

34½" high	31½" high	40½" high	34½" high
BFBO3L	**VFBO3L**	**BFBO3TL**	**VFBO3TL**
BFBO3R	**VFBO3R**	**BFBO3TR**	**VFBO3TR**

- Maximum 36" Deep

UFBO381L	**UFBO390R**	**UFBO3108L**
UFBO381R	**UFBO393L**	**UFBO3108R**
UFBO384L	**UFBO393R**	**UFBO3114L**
UFBO384R	**UFBO396L**	**UFBO3114R**
UFBO387L	**UFBO396R**	**UFBO3120L**
UFBO387R	**UFBO3102L**	**UFBO3120R**
UFBO390L	**UFBO3102R**	

HOW TO ORDER A DOUBLE RETURN

Items in blocks 11500, 11502, 11510, 11520, 11530, 11540, 11560, 11570 and 11610 can be ordered with a double return. Double Return not available with MDP or FFD. To order, specify **Double Return** in the Special Information column. Add 50% to the cost of the panel.

Block 11560 Filler Box Column Block

DESIGN CONSIDERATIONS

2" Wide

- Flush finished veneer end panel
- Panel return is 4"
- CLBBL attached to top and bottom of face. Moulding attached in between.
- Use Cherry for Alder cabinetry.
- Wall (WFBCMB) and Utility (UFBCMB) nomenclature reads width (2") by height
- Always built with ½" veneer panels

HOW TO ORDER

- Specify **Depth**
- To modify dimensions, use **ACMOD** in Block 9085. Specify dimensions in special info.
- Wide Bottom Rail is available at no extra charge for Base, Vanity and Utility. To order, add suffix **WBR**.
- Illustration shows LEFT
- Specify rope (**LTROPE**), reeded (**CLREED**), or plain moulding (**CLPLN**)
- Pricing P-346

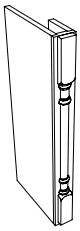

- Maximum 36" Deep
- Maximum 66" High

WFBCMB224L	**WFBCMB242L**	**WFBCMB260L**
WFBCMB224R	**WFBCMB242R**	**WFBCMB260R**
WFBCMB227L	**WFBCMB245L**	**WFBCMB263L**
WFBCMB227R	**WFBCMB245R**	**WFBCMB263R**
WFBCMB230L	**WFBCMB248L**	**WFBCMB266L**
WFBCMB230R	**WFBCMB248R**	**WFBCMB266R**
WFBCMB233L	**WFBCMB251L**	
WFBCMB233R	**WFBCMB251R**	
WFBCMB236L	**WFBCMB254L**	
WFBCMB236R	**WFBCMB254R**	
WFBCMB239L	**WFBCMB257L**	
WFBCMB239R	**WFBCMB257R**	

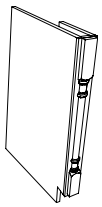

- Maximum 36" Deep
- Maximum 40½" High

34½" high	31½" high	40½" high	34½" high
BFBCMB2L	**VFBCMB2L**	**BFBCMB2TL**	**VFBCMB2TL**
BFBCMB2R	**VFBCMB2R**	**BFBCMB2TR**	**VFBCMB2TR**

- Maximum 36" Deep

UFBCMB281L	**UFBCMB290R**	**UFCMB2108L**
UFBCMB281R	**UFBCMB293L**	**UFCMB2108R**
UFBCMB284L	**UFBCMB293R**	**UFCMB2114L**
UFBCMB284R	**UFBCMB296L**	**UFCMB2114R**
UFBCMB287L	**UFBCMB296R**	**UFCMB2120L**
UFBCMB287R	**UFCMB2102L**	**UFCMB2120R**
UFBCMB290L	**UFCMB2102R**	

© Copyright StarMark Cabinetry FEBRUARY 2022

Block 11570 Filler Box Column Block

DESIGN CONSIDERATIONS

3″ Wide

- Flush finished veneer end panel
- Panel return is 4″
- CLBBL attached to top and bottom of face. Moulding attached in between.
- Use Cherry for Alder cabinetry.
- Wall (WFBCMB) and Utility (UFBCMB) nomenclature reads width (3″) by height
- Always built with ½″ veneer panels

HOW TO ORDER

- Specify **Depth**
- To modify dimensions, use **ACMOD** in Block 9085. Specify dimensions in special info.
- Wide Bottom Rail is available at no extra charge for Base, Vanity and Utility. To order, add suffix **WBR**.
- Illustration shows LEFT
- Specify rope (**LTROPE**), reeded (**CLREED**), or plain moulding (**CLPLN**)
- Pricing P-346

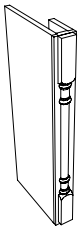

- Maximum 36″ Deep
- Maximum 66″ High

WFBCMB324L	**WFBCMB342L**	**WFBCMB360L**
WFBCMB324R	**WFBCMB342R**	**WFBCMB360R**
WFBCMB327L	**WFBCMB345L**	**WFBCMB363L**
WFBCMB327R	**WFBCMB345R**	**WFBCMB363R**
WFBCMB330L	**WFBCMB348L**	**WFBCMB366L**
WFBCMB330R	**WFBCMB348R**	**WFBCMB366R**
WFBCMB333L	**WFBCMB351L**	
WFBCMB333R	**WFBCMB351R**	
WFBCMB336L	**WFBCMB354L**	
WFBCMB336R	**WFBCMB354R**	
WFBCMB339L	**WFBCMB357L**	
WFBCMB339R	**WFBCMB357R**	

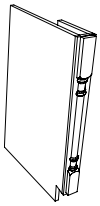

- Maximum 36″ Deep
- Maximum 40½″ High

34½″ high	31½″ high	40½″ high	34½″ high
BFBCMB3L	**VFBCMB3L**	**BFBCMB3TL**	**VFBCMB3TL**
BFBCMB3R	**VFBCMB3R**	**BFBCMB3TR**	**VFBCMB3TR**

- Maximum 36″ Deep

UFBCMB381L	**UFBCMB393L**	**UFCMB3114L**
UFBCMB381R	**UFBCMB393R**	**UFCMB3114R**
UFBCMB384L	**UFBCMB396L**	**UFCMB3120L**
UFBCMB384R	**UFBCMB396R**	**UFCMB3120R**
UFBCMB387L	**UFCMB3102L**	
UFBCMB387R	**UFCMB3102R**	
UFBCMB390L	**UFCMB3108L**	
UFBCMB390R	**UFCMB3108R**	

Block 11580 Angle End Panel

DESIGN CONSIDERATIONS

3″ and 6″ Wide

- 45 degree angle
- Wall (WAEP) and Utility (UAEP) nomenclature reads width (3″, 6″) by height
- No toe kick
- ¼″ face frame lip with ½″ veneer panel unless Flush or Furniture end is specified and upcharged.

HOW TO ORDER

- To modify dimensions, use **ACMOD** in Block 9085. Specify dimensions in special info.
- Pricing P-347

Width	Wall Space Required	Actual Size
3″	3″	4¼″
6″	6″	8½″

Maximum 36″ Deep
Maximum Heights: Wall 66″, Base 40½″, Utility 96″, Vanity 34½″

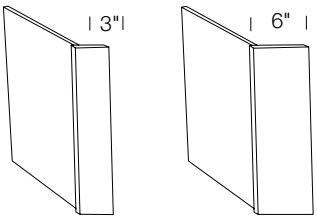

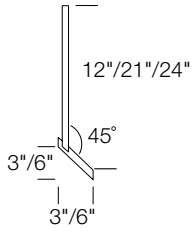

WAEP324L	**WAEP348L**	**WAEP624L**	**WAEP648L**
WAEP324R	**WAEP348R**	**WAEP624R**	**WAEP648R**
WAEP327L	**WAEP351L**	**WAEP627L**	**WAEP651L**
WAEP327R	**WAEP351R**	**WAEP627R**	**WAEP651R**
WAEP330L	**WAEP354L**	**WAEP630L**	**WAEP654L**
WAEP330R	**WAEP354R**	**WAEP630R**	**WAEP654R**
WAEP333L	**WAEP357L**	**WAEP633L**	**WAEP657L**
WAEP333R	**WAEP357R**	**WAEP633R**	**WAEP657R**
WAEP336L	**WAEP360L**	**WAEP636L**	**WAEP660L**
WAEP336R	**WAEP360R**	**WAEP636R**	**WAEP660R**
WAEP339L	**WAEP363L**	**WAEP639L**	**WAEP663L**
WAEP339R	**WAEP363R**	**WAEP639R**	**WAEP663R**
WAEP342L	**WAEP366L**	**WAEP642L**	**WAEP666L**
WAEP342R	**WAEP366R**	**WAEP642R**	**WAEP666R**
WAEP345L		**WAEP645L**	
WAEP345R		**WAEP645R**	

30½″ high	27½″ high	36½″ high	31½″ high
BAEP330L	**VAEP327L**	**BAEP336TL**	**VAEP331L**
BAEP330R	**VAEP327R**	**BAEP336TR**	**VAEP331R**
BAEP630L	**VAEP627L**	**BAEP636TL**	**VAEP631L**
BAEP630R	**VAEP627R**	**BAEP636TR**	**VAEP631R**
34½″ high	30½″ high	40½″ high	34½″ high
BAEP334L	**VAEP330TL**	**BAEP340TL**	**VAEP334TL**
BAEP334R	**VAEP330TR**	**BAEP340TR**	**VAEP334TR**
BAEP634L	**VAEP630TL**	**BAEP640TL**	**VAEP634TL**
BAEP634R	**VAEP630TR**	**BAEP640TR**	**VAEP634TR**

UAEP381L	**UAEP3102L**	**UAEP681L**	**UAEP6102L**
UAEP381R	**UAEP3102R**	**UAEP681R**	**UAEP6102R**
UAEP384L	**UAEP3108L**	**UAEP684L**	**UAEP6108L**
UAEP384R	**UAEP3108R**	**UAEP684R**	**UAEP6108R**
UAEP387L	**UAEP3114L**	**UAEP687L**	**UAEP6114L**
UAEP387R	**UAEP3114R**	**UAEP687R**	**UAEP6114R**
UAEP390L	**UAEP3120L**	**UAEP690L**	**UAEP6120L**
UAEP390R	**UAEP3120R**	**UAEP690R**	**UAEP6120R**
UAEP393L		**UAEP693L**	
UAEP393R		**UAEP693R**	
UAEP396L		**UAEP696L**	
UAEP396R		**UAEP696R**	

© Copyright StarMark Cabinetry FEBRUARY 2022

I available in Inset cabinetry

Block 11590 Fluted Angle End Panel

DESIGN CONSIDERATIONS

3" & 6" Wide

- Flutes stop 2" from top and bottom, unless specified otherwise
- 3" has 4 flutes
- 6" has 9 flutes
- 45 degree angle
- Wall (WFAEP) and Utility (UFAEP) nomenclature reads width (3", 6") by height
- No toe kick
- ¼" face frame lip with ½" veneer panel unless Flush or Furniture end is specified and upcharged.

HOW TO ORDER

- To modify dimensions, use **ACMOD** in Block 9085. Specify dimensions in special info.
- Pricing P-348

Width	Wall Space Required	Actual Size
3"	3"	4¼"
6"	6"	8½"

Maximum 36" Deep
Maximum Heights: Wall 66", Base 40½", Utility 96", Vanity 34½"

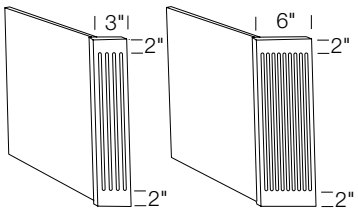

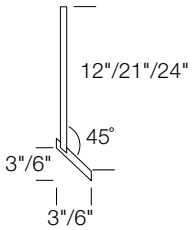

WFAEP324L	**WFAEP348L**	**WFAEP624L**	**WFAEP648L**
WFAEP324R	**WFAEP348R**	**WFAEP624R**	**WFAEP648R**
WFAEP327L	**WFAEP351L**	**WFAEP627L**	**WFAEP651L**
WFAEP327R	**WFAEP351R**	**WFAEP627R**	**WFAEP651R**
WFAEP330L	**WFAEP354L**	**WFAEP630L**	**WFAEP654L**
WFAEP330R	**WFAEP354R**	**WFAEP630R**	**WFAEP654R**
WFAEP333L	**WFAEP357L**	**WFAEP633L**	**WFAEP657L**
WFAEP333R	**WFAEP357R**	**WFAEP633R**	**WFAEP657R**
WFAEP336L	**WFAEP360L**	**WFAEP636L**	**WFAEP660L**
WFAEP336R	**WFAEP360R**	**WFAEP636R**	**WFAEP660R**
WFAEP339L	**WFAEP363L**	**WFAEP639L**	**WFAEP663L**
WFAEP339R	**WFAEP363R**	**WFAEP639R**	**WFAEP663R**
WFAEP342L	**WFAEP366L**	**WFAEP642L**	**WFAEP666R**
WFAEP342R	**WFAEP366R**	**WFAEP642R**	**WFAEP666L**
WFAEP345L		**WFAEP645L**	
WFAEP345R		**WFAEP645R**	

30½" high	34½" high	36½" high	40½" high
BFAEP330L	**BFAEP334L**	**BFAEP336TL**	**BFAEP340TL**
BFAEP330R	**BFAEP334R**	**BFAEP336TR**	**BFAEP340TR**
BFAEP630L	**BFAEP634L**	**BFAEP636TL**	**BFAEP640TL**
BFAEP630R	**BFAEP634R**	**BFAEP636TR**	**BFAEP640TR**

27½" high	30½" high	31½" high	34½" high
VFAEP327L	**VFAEP330TL**	**VFAEP331L**	**VFAEP334TL**
VFAEP327R	**VFAEP330TR**	**VFAEP331R**	**VFAEP334TR**
VFAEP627L	**VFAEP630TL**	**VFAEP631L**	**VFAEP634TL**
VFAEP627R	**VFAEP630TR**	**VFAEP631R**	**VFAEP634TR**

UFAEP381L	**UFAEP3102L**	**UFAEP681L**	**UFAEP6102L**
UFAEP381R	**UFAEP3102R**	**UFAEP681R**	**UFAEP6102R**
UFAEP384L	**UFAEP3108L**	**UFAEP684L**	**UFAEP6108L**
UFAEP384R	**UFAEP3108R**	**UFAEP684R**	**UFAEP6108R**
UFAEP387L	**UFAEP3114L**	**UFAEP687L**	**UFAEP6114L**
UFAEP387R	**UFAEP3114R**	**UFAEP687R**	**UFAEP6114R**
UFAEP390L	**UFAEP3120L**	**UFAEP690L**	**UFAEP6120L**
UFAEP390R	**UFAEP3120R**	**UFAEP690R**	**UFAEP6120R**
UFAEP393L		**UFAEP693L**	
UFAEP393R		**UFAEP693R**	
UFAEP396L		**UFAEP696L**	
UFAEP396R		**UFAEP696R**	

Block 11600 Fluted Flush End Panel with Plinth and Base Block

DESIGN CONSIDERATIONS

3" Wide

- To be used with bookcase type cabinets
- End panel can overlap face frame. See Illustration A.
- Flush finished veneer end panel
- 1" reveal at top for moulding application
- Rosette is routed into plinth
- Wall (WFEP) and Tall (TFEP) nomenclature reads width (3") by height
- Always built with ½" veneer panels

HOW TO ORDER

- Specify **Depth**
- To modify dimensions, use **ACMOD** in Block 9085. Specify dimensions in special info.
- Specify **LEF** or **REF**
- Illustration shows **LEF**
- To order without plinth blocks, specify "no plinth blocks" in Special Information section
- Pricing P-349

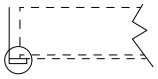

A.

- Maximum 36" Deep
- Maximum 66" High

WFEP324L	**WFEP339L**	**WFEP354L**
WFEP324R	**WFEP339R**	**WFEP354R**
WFEP327L	**WFEP342L**	**WFEP357L**
WFEP327R	**WFEP342R**	**WFEP357R**
WFEP330L	**WFEP345L**	**WFEP360L**
WFEP330R	**WFEP345R**	**WFEP360R**
WFEP333L	**WFEP348L**	**WFEP363L**
WFEP333R	**WFEP348R**	**WFEP363R**
WFEP336L	**WFEP351L**	**WFEP366L**
WFEP336R	**WFEP351R**	**WFEP366R**

- Maximum 36" Deep
- Maximum 40½" High

34½" high	31½" high	40½" high	34½" high
BFEP3L	**VFEP3L**	**BFEP3TL**	**VFEP3TL**
BFEP3R	**VFEP3R**	**BFEP3TR**	**VFEP3TR**

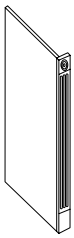

- Maximum 36" Deep

TFEP381L	**TFEP396L**
TFEP381R	**TFEP396R**
TFEP384L	**TFEP3102L**
TFEP384R	**TFEP3102R**
TFEP387L	**TFEP3108L**
TFEP387R	**TFEP3108R**
TFEP390L	**TFEP3114L**
TFEP390R	**TFEP3114R**
TFEP393L	**TFEP3120L**
TFEP393R	**TFEP3120R**

© Copyright StarMark Cabinetry FEBRUARY 2022

Block 11610 Fluted Flush End Panel Box

DESIGN CONSIDERATIONS

3" and 6" Wide

- Flush finished veneer end panel
- Panel return is 4"
- Flutes stop 2" from top and bottom, unless specified otherwise
- This panel installs between two cabinets. See Illustration A.
- Wall (WFB) and Tall (TFB) nomenclature reads width (3", 6") by height
- Always built with ½" veneer panels

HOW TO ORDER

- Specify **Depth** in Special Information section
- To modify dimensions, use **ACMOD** in Block 9085. Specify dimensions in special info.
- Illustration shows shows Left
- Pricing P-349-350

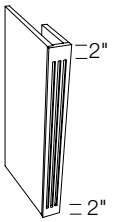

- Maximum 36" Deep
- Maximum 66" High

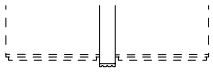

A.

WFB324L	**WFB348L**	**WFB624L**	**WFB648L**
WFB324R	**WFB348R**	**WFB624R**	**WFB648R**
WFB327L	**WFB351L**	**WFB627L**	**WFB651L**
WFB327R	**WFB351R**	**WFB627R**	**WFB651R**
WFB330L	**WFB354L**	**WFB630L**	**WFB654L**
WFB330R	**WFB354R**	**WFB630R**	**WFB654R**
WFB333L	**WFB357L**	**WFB633L**	**WFB657L**
WFB333R	**WFB357R**	**WFB633R**	**WFB657R**
WFB336L	**WFB360L**	**WFB636L**	**WFB660L**
WFB336R	**WFB360R**	**WFB636R**	**WFB660R**
WFB339L	**WFB363L**	**WFB639L**	**WFB663L**
WFB339R	**WFB363R**	**WFB639R**	**WFB663R**
WFB342L	**WFB366L**	**WFB642L**	**WFB666L**
WFB342R	**WFB366R**	**WFB642R**	**WFB666R**
WFB345L		**WFB645L**	
WFB345R		**WFB645R**	

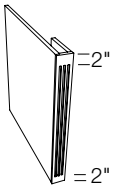

- Maximum 36" Deep
- Maximum 40½" High

34½" high	31½" high	40½" high	34½" high
BFB3L	**VFB3L**	**BFB3TL**	**VFB3TL**
BFB3R	**VFB3R**	**BFB3TR**	**VFB3TR**
BFB6L	**VFB6L**	**BFB6TL**	**VFB6TL**
BFB6R	**VFB6R**	**BFB6TR**	**VFB6TR**

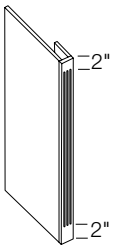

- Maximum 36" Deep

TFB381L	**TFB396L**	**TFB681L**	**TFB696L**
TFB381R	**TFB396R**	**TFB681R**	**TFB696R**
TFB384L	**TFB3102L**	**TFB684L**	**TFB6102L**
TFB384R	**TFB3102R**	**TFB684R**	**TFB6102R**
TFB387L	**TFB3108L**	**TFB687L**	**TFB6108L**
TFB387R	**TFB3108R**	**TFB687R**	**TFB6108R**
TFB390L	**TFB3114L**	**TFB690L**	**TFB6114L**
TFB390R	**TFB3114R**	**TFB690R**	**TFB6114R**
TFB393L	**TFB3120L**	**TFB693L**	**TFB6120L**
TFB393R	**TFB3120R**	**TFB693R**	**TFB6120R**

Block 11720 End Panel with Lamb's Tongue

DESIGN CONSIDERATIONS

1" Wide

- Flush finished veneer end panel
- End panel is 1" wide
- Lamb's tongue stops 2" from top and bottom, unless otherwise specified
- Inside of end panel is finished approximately 4" in from front edge
- Always built with ½" veneer panels

HOW TO ORDER

- Specify **Depth**
- To modify dimensions, use **ACMOD** in Block 9085. Specify dimensions in special info.
- Specify **Finished Ends** on adjacent cabinetry, or specify this item to be the same height as adjacent cabinetry.
- Pricing P-350

INSTALLATION TIP

We suggest placing end panel flush with face frame

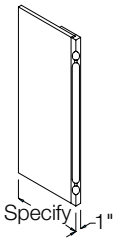

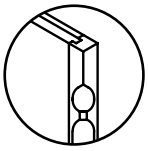

- Maximum 36" Deep
- Maximum 66" High

WEPLT24L	**WEPLT42L**	**WEPLT60L**
WEPLT24R	**WEPLT42R**	**WEPLT60R**
WEPLT27L	**WEPLT45L**	**WEPLT63L**
WEPLT27R	**WEPLT45R**	**WEPLT63R**
WEPLT30L	**WEPLT48L**	**WEPLT66L**
WEPLT30R	**WEPLT48R**	**WEPLT66R**
WEPLT33L	**WEPLT51L**	
WEPLT33R	**WEPLT51R**	
WEPLT36L	**WEPLT54L**	
WEPLT36R	**WEPLT54R**	
WEPLT39L	**WEPLT57L**	
WEPLT39R	**WEPLT57R**	

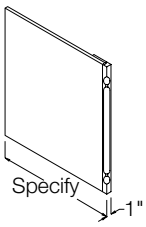

- Maximum 36" Deep
- Maximum 40½" High

34½" high	31½" high	40½" high	34½" high
BEPLTL	**VEPLTL**	**BEPLTTL**	**VEPLTTL**
BEPLTR	**VEPLTR**	**BEPLTTR**	**VEPLTTR**

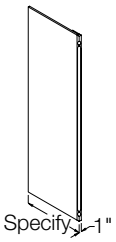

- Maximum 36" Deep
- Maximum 96" High

UEPLT81L	**UEPLT90L**
UEPLT81R	**UEPLT90R**
UEPLT84L	**UEPLT93L**
UEPLT84R	**UEPLT93R**
UEPLT87L	**UEPLT96L**
UEPLT87R	**UEPLT96R**

© Copyright StarMark Cabinetry **FEBRUARY 2022**

Block 11840 Lazy Susan Base End Panel

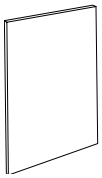

LSBEP

DESIGN CONSIDERATIONS

¼" Material

- Measures 23¼"w X 34½"h
- Use this item to cover the side of LSB (Block 3220) on the end of run or next to an appliance

HOW TO ORDER

- To modify dimensions, use **ACMOD** in Block 9085. Specify dimensions in special info.
- Pricing P-351

Block 11850 Tapered Vanity End Panel

DESIGN CONSIDERATIONS

- ¾" plywood is finished both sides
- Fits behind face frame of DKV, block 7280; VDD, block 8025; or POK, block 7285

HOW TO ORDER

- To modify dimensions, use **ACMOD** in Block 9085. Specify dimensions in special info.
- Pricing P-351

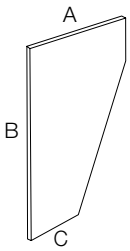

	A	B	C
TVEP1828	17¼"	28½"	10½"
TVEP2128	20¼"	28½"	10½"
TVEP2428	23¼"	28½"	10½"
TVEP1831	17¼"	31½"	10½"
TVEP2131	20¼"	31½"	10½"
TVEP2431	23¼"	31½"	10½"

TVEP1828
TVEP2128
TVEP2428

TVEP1831
TVEP2131
TVEP2431

© Copyright StarMark Cabinetry FEBRUARY 2022

THIS PAGE INTENTIONALLY LEFT BLANK

© Copyright StarMark Cabinetry FEBRUARY 2022

THIS PAGE INTENTIONALLY LEFT BLANK

© Copyright StarMark Cabinetry FEBRUARY 2022

THIS PAGE INTENTIONALLY LEFT BLANK

© Copyright StarMark Cabinetry FEBRUARY 2022

Index

Description	Nomenclature	Page
3/4" Solid Stock	SSTK	C-430
Acanthus Moulding	LACN	C-439
Angled Corner Panel Moulding	ACPM	C-433
Angled Inside Corner Moulding	AICORN	C-434
Angled Outside Corner Moulding	AOCORN	C-434
Arch Valance - Flat Panel	FARV	C-421
Arch Valance - Rolled Panel	RARV	C-421
Arch Valance - Scooped Panel	SARV	C-421
Arched Chamfered Furniture Valance	AFRNV	C-420
Arched Valance	AV	C-419
Arts & Craft Crown Moulding	ACCM	C-424
BD Light Shield Moulding	LSMBD	C-437
Base Furniture Moulding	MBFM	C-430
Base Moulding - Beaded	MBMB	C-429
Base Moulding - Regent	MBMC	C-429
Base Moulding - Stepped	MBMA	C-429
Base Return Moulding	MBRM	C-432
Beaded Light Shield Moulding	BLSM	C-438
Beaded Panel Moulding	BPM	C-435
Beads and Reeds Moulding	BREED	C-439
Bead Small Light Shield Moulding	LSMBS	C-436
Bevel Countertop Edge	BCE	C-433
Cap for Straight Valance	SVC	C-419
Classic Crown Moulding	CCM	C-424
Column Plain Moulding	CLPLN	C-441
Column Reeded Moulding	CLREED	C-441
Corner Moulding	CORN	C-433
Cove Moulding	COVE	C-426
Crown Moulding	CM	C-422
DC Light Shield Moulding	LSMDC	C-436
Decorator Countertop Edge	DCE	C-433
Dentil Moulding	DM	C-438
Egg and Dart Moulding	LEGD	C-440
Extra Tall Crown Moulding	XTCM	C-423
Extra Wide Crown Moulding	XWCM	C-423
Eyebrow Valance	EYEV	C-419
Eyebrow Valance with Cut-Outs	EYECOV	C-420
Finished Sides and Edges	FBS	C-430
Flat or Scribe Moulding	FLAT	C-434
Flush Moulding	FM	C-435
Furniture Base Moulding	FURN	C-430
Grooved Valance	GV	C-419
Inside Radius Large Cove Moulding	LCIMO	C-426
L Edge Light Shield Moulding	LSML	C-437
L Edge Small Light Shield Moulding	LSMLS	C-436
L Edge Large Scribe Moulding	LSCRL	C-435
L Edge Small Scribe Moulding	LSCRS	C-434
Large Base Moulding	LBM	C-429
Large Box Dentil Moulding	LDM	C-438
Large Cove Crown Inside Radius Moulding	LCCIMO	C-426
Large Cove Crown Moulding	LCCM	C-425
Large Cove Crown Outside Radius Moulding	LCCOMO	C-426
Large Cove Moulding	LC	C-425
Large Cove Moulding Spacer	LCMS	C-426
Large Crown Moulding	LCM	C-422
Large Flat Moulding	LFLAT	C-435
Large Flat Reeded Moulding	LREED	C-442
Large Turned Rope Moulding	LTROPE	C-441
Light Box	LB	C-421
Medium Cove Crown Moulding	MCCM	C-425
Medium Crown Moulding	MCM	C-422
Mirror Moulding	MM	C-431
Outside Radius Decorator Moulding	RDOM	C-427
Outside Radius Large Cove Moulding	LCOMO	C-426
PW Light Shield Moulding	LSMPW	C-437
Panel Cap Moulding-A	PCMA	C-428
Panel Cap Moulding-B	PCMB	C-428
Panel Cap Moulding-C	PCMC	C-428
Panel Moulding	PLM	C-428
Plate and Platter Moulding	PPL	C-440
Pointed Chamfered Furniture Valance	PFRNV	C-420
Radius Countertop Edge	RCE	C-433
Radius Decorator Moulding	RDM	C-427
Radius Decorator Moulding Spacer	RDMS	C-427
Recess Light Shield Moulding	LSMR	C-437
Recess Small Light Shield Moulding	LSMRS	C-436
Reed Crown Moulding	RCM	C-424
Ribbon Twist Moulding	RIB	C-440
Scroll Valance	V	C-419
Shoe Moulding	SHOE	C-427
Skirt Base Moulding	BM	C-432
Small Box Dentil Moulding	SDM	C-438
Small Crown Moulding	SCM	C-422
Small Flat Reeded Moulding	SREED	C-442
Small Loop De Loop Moulding	SLOOP	C-440
Solid Stock Treatment	SS-CUT	C-431
Special Countertop Edge	SPCE	C-433
Stop Moulding	STOP	C-427
Straight Large Onlay Valance	SVL	C-420
Straight Valance	SV	C-419
Tall Arts & Craft Crown Moulding	TACM	C-424
Tall Cove Crown Moulding	TCCM	C-425
Tall Traditional Crown Moulding	TTCM	C-423
Toe Board Cap	MTBC	C-421
Toe Board Trim	MCTBT/HTBT/ MTBT	C-421
Traditional Large Onlay Valance	AVL	C-420
Turned Rope Moulding	TROPE	C-440
Valance Box	SVBOX	C-421
Vine Moulding	VINE	C-441
Wide Crown Moulding	WCM	C-423
Z2 Light Shield Moulding	LSMZ2	C-436

© Copyright StarMark Cabinetry FEBRUARY 2022

Index

Description	Nomenclature	Page	Description	Nomenclature	Page

© Copyright StarMark Cabinetry FEBRUARY 2022

Block 12000 Standard Valances

DESIGN CONSIDERATIONS
- Some valances may accept onlays.
- Valances are finished front and back.

HOW TO ORDER
- Order onlays separately.
- See block 9180 for onlay attachment
- To modify dimensions, use **ACMOD** in Block 9085. Specify dimensions in special info.

Arched Valance
Alder, Cherry, Hickory, Maple, Oak, Quarter Sawn Oak, Walnut
AV37
AV43
AV49
AV55
AV61
AV73
AV84

DESIGN CONSIDERATIONS
4½" High
- Valance accepts onlay
- Solid ¾" wood
- 6" trimmable overall
- The bottom edge of the valance has an ogee edge.

HOW TO ORDER
- See block 9180 for onlay attachment
- Pricing P-353

Scroll Valance
Alder, Cherry, Hickory, Maple, Oak, Quarter Sawn Oak, Walnut
V37
V43
V49
V55
V61
V73
V84

DESIGN CONSIDERATIONS
4½" High
- Valance accepts onlays
- Solid ¾" wood
- 6" trimmable overall
- Number of points varies by width

HOW TO ORDER
- See block 9180 for onlay attachment
- Pricing P-353

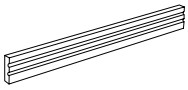

Grooved Valance
Alder, Cherry, Hickory, Maple, Oak, Quarter Sawn Oak, Walnut
GV37
GV43
GV49
GV55
GV61
GV73
GV84

DESIGN CONSIDERATIONS
4½" High
- Solid ¾" wood
- Trimmable

HOW TO ORDER
- Pricing P-353

Block 12000 Standard Valances continued

Straight Valance
Alder, Cherry, Hickory, Maple, Oak, Quarter Sawn Oak, Walnut
SV37
SV43
SV49
SV55
SV61
SV73
SV84

DESIGN CONSIDERATIONS
4½" High
- Valance accepts onlays
- Solid ¾" wood
- Trimmable
- The bottom edge of the valance has an ogee edge.

HOW TO ORDER
- See block 9180 for onlay attachment
- Pricing P-353

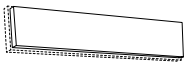

Cap for Straight Valance
Alder, Cherry, Hickory, Maple, Oak, Quarter Sawn Oak, Walnut
SVC36.5
SVC42.5
SVC48.5
SVC54.5
SVC60.5

DESIGN CONSIDERATIONS
4" High
- To be placed on face of SV
- Valance cap will leave ¼" reveal on all sides
- Outside profile will match door style specified on order.

HOW TO ORDER
- Pricing P-353

Block 12010 Decorative Valances

DESIGN CONSIDERATIONS
- Valances are 2" longer than listed for field trimming, unless noted otherwise.
- Valances may accept inserts, onlays or both.
- Valances are finished front and back.

HOW TO ORDER
- Order inserts and onlays separately.
- See block 9170 for a modification that incorporates valance into top rail of cabinet
- See block 9180 for onlay attachment
- To modify dimensions, use **ACMOD** in Block 9085. Specify dimensions in special info.
- Pricing P-353

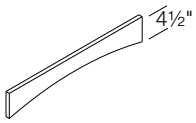

Eyebrow Valance
Alder, Cherry, Hickory, Maple, Oak, Quarter Sawn Oak, Walnut
EYEV24
EYEV30
EYEV36
EYEV42
EYEV48
EYEV54
EYEV60
EYEV66
EYEV72
EYEV82
EYEV94

DESIGN CONSIDERATIONS
4½" High - 3" High at center
- Valance accepts onlays
- Solid ¾" wood

© Copyright StarMark Cabinetry FEBRUARY 2022

Block 12010 Decorative Valances continued I

DESIGN CONSIDERATIONS

- Valances are 2" longer than listed for field trimming, unless noted otherwise.
- Valances may accept inserts, onlays or both.
- Valances are finished front and back.

HOW TO ORDER

- Order inserts and onlays separately.
- See block 9170 for a modification that incorporates valance into top rail of cabinet
- See block 9180 for onlay attachment
- To modify dimensions, use **ACMOD** in Block 9085. Specify dimensions in special info.
- Pricing P-353-354

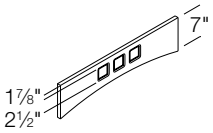

Eyebrow Valance with Cut-Outs
Alder, Cherry, Hickory, Maple, Oak, Quarter Sawn Oak, Walnut
EYECOV24
EYECOV30
EYECOV36
EYECOV42
EYECOV48
EYECOV54
EYECOV60
EYECOV66
EYECOV72

DESIGN CONSIDERATIONS

7" High - 5½" High at center

- Valance accepts an insert and onlays
- Solid ¾" wood
- Three cutouts for all widths

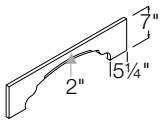

Arched Chamfered Furniture Valance
Alder, Cherry, Hickory, Maple, Oak, Quarter Sawn Oak, Walnut
AFRNV24
AFRNV30
AFRNV36
AFRNV42
AFRNV48
AFRNV54
AFRNV60
AFRNV66
AFRNV72

DESIGN CONSIDERATIONS

7" High - 2" High at center

- Valance accepts onlays
- Solid ¾" wood

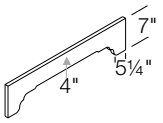

Pointed Chamfered Furniture Valance
Alder, Cherry, Hickory, Maple, Oak, Quarter Sawn Oak, Walnut
PFRNV24
PFRNV30
PFRNV36
PFRNV42
PFRNV48
PFRNV54
PFRNV60
PFRNV66
PFRNV72

DESIGN CONSIDERATIONS

7" High - 4" High at center

- Valance accepts onlays
- Solid ¾" wood

Block 12010 Decorative Valances continued I

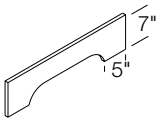

Traditional Large Onlay Valance
Alder, Cherry, Hickory, Maple, Oak, Quarter Sawn Oak, Walnut
AVL24
AVL30
AVL36
AVL42
AVL48
AVL54
AVL60
AVL66
AVL72

DESIGN CONSIDERATIONS

7" High - 5½" High at center

- Valance accepts onlays
- Solid ¾" wood

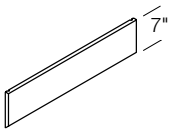

Straight Large Onlay Valance
Alder, Cherry, Hickory, Maple, Oak, Quarter Sawn Oak, Walnut
SVL24
SVL30
SVL36
SVL42
SVL48
SVL54
SVL60
SVL66
SVL72

DESIGN CONSIDERATIONS

7" High

- Valance accepts onlays
- Solid ¾" wood
- The bottom edge of the valance has an ogee edge.

© Copyright StarMark Cabinetry FEBRUARY 2022

Block 12030 Arch Valance – Rolled, Scooped and Flat Panel

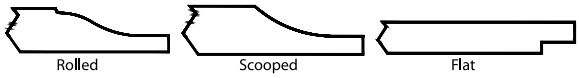

Rolled and Scooped Panel

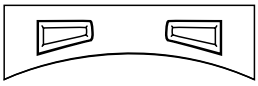

Flat Panel

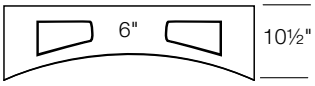

ROLLED PANEL
Alder, Cherry, Hickory, Maple, Oak, Walnut

RARV36	**RARV42**
RARV48	**RARV54**
RARV60	**RARV66**
RARV72	**RARV78**
RARV84	

SCOOPED PANEL
Alder, Cherry, Hickory, Maple, Oak, Walnut

SARV36	**SARV42**
SARV48	**SARV54**
SARV60	**SARV66**
SARV72	**SARV78**
SARV84	

FLAT PANEL
Alder, Cherry, Hickory, Maple, Oak, Walnut

FARV36	**FARV42**
FARV48	**FARV54**
FARV60	**FARV66**
FARV72	**FARV78**
FARV84	

DESIGN CONSIDERATIONS
- At all widths, Arch Valance is 6" high at the center and 10½" high at the outside edges.
- See HelpZone for dimensions at various widths.
- Available in Rolled, Scooped and Flat Panel.
- Trimmable up to 3" on each side
- Valance is finished front and back
- Built with ogee inside edge

HOW TO ORDER
- No modifications allowed to this valance.
- To modify dimensions, use **ACMOD** in Block 9085. Specify dimensions in special info.
- Pricing P-354

Block 12050 Valance Box

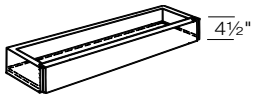

Alder, Cherry, Hickory, Maple, Oak, Walnut
SVBOX36
SVBOX48
SVBOX60
SVBOX72
SVBOX84

DESIGN CONSIDERATIONS
- The valance measures 36", 48", 60", 72", 84"
- The Valance Box is designed to fit between two standard end panels. To achieve this, the Box is ½" wider than the Valance.

Valance Width	Box Width
36"	36½"
48"	48½"
60"	60½"
72"	72½"
84"	84½"

HOW TO ORDER
- To modify dimensions, use **ACMOD** in Block 9085. Specify dimensions in special info.
- Pricing P-354

Block 12060 Light Box

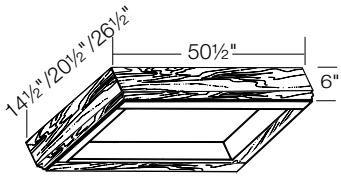

LB1349
LB1949
LB2549

6" Deep
- Attaches to ceiling joist
- Use with general purpose unshielded fluorescent fixtures
- Diffuser light panel is not included

HOW TO ORDER
- To modify dimensions, use **ACMOD** in Block 9085. Specify dimensions in special info.
- Pricing P-354

	Outside Dimensions	Inside Opening Dimensions
LB1349	14½" X 50½"	10" X 46"
LB1949	20½" X 50½"	16" X 46"
LB2549	26½" X 50½"	22" X 46"

NOTE for blocks 12200 - 12950

- To specify these items in a finish that is different from the cabinetry, please order them using a separate order form.
- Moulding plans available on OneTouch in the Product Info + Resources section.

Block 12200 Toe Board Trim

Alder, Cherry, Hickory, Maple, Oak, Quarter Sawn Oak, Walnut
MTBT
HTBT
MCTBT

DESIGN CONSIDERATIONS
- ¼" veneered plywood for MTBT, HTBT. ¼" HDO is substituted on Tinted Varnish orders.
- ⅛" veneered plywood for MCTBT
- MTBT is for standard toe kick space. It is 3⅞" high
- HTBT is for items in blocks 4300-4322. It is 10½" high
- MCTBT is for items in blocks 4600, 4610, 4620, 4710 and 5400. It is 3⅞" high

HOW TO ORDER
- This item is sold per 8 foot nominal length. An 8 foot piece of moulding will have 93" of usable length.
- Pricing P-355

Block 12210 Toe Board Cap

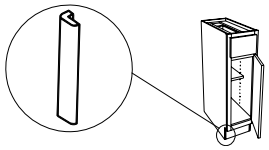

MTBC

DESIGN CONSIDERATIONS
- Use with 4" toe board trim
- Recommended for use at the end of a run

HOW TO ORDER
- Pricing P-355

© Copyright StarMark Cabinetry FEBRUARY 2022

Block 12220 Small Crown Moulding

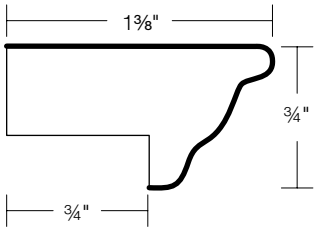

Alder, Cherry, Hickory, Maple, Oak, Walnut
SCM8
SCM10

DESIGN CONSIDERATIONS
- Solid wood
- Overlaps ¼" on face frame of cabinet
- Finished edges indicated by dark line
- Use Oak for Quarter Sawn Oak

HOW TO ORDER
- This item is sold per 8 foot length and 10 foot length.
- The lengths are nominal. An 8 foot piece of moulding will have 93" of usable length. A 10 foot piece of moulding will have 117" of usable length.
- Pricing P-355

Block 12225 Medium Crown Moulding

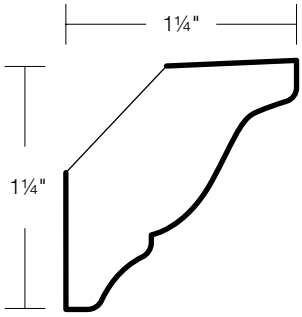

Alder, Cherry, Hickory, Maple, Oak, Walnut
MCM8

DESIGN CONSIDERATIONS
- Solid wood
- Finished edges indicated by dark line

HOW TO ORDER
- This item is sold per 8 foot nominal length. An 8 foot piece of moulding will have 93" of usable length.
- Pricing P-355

Block 12230 Crown Moulding

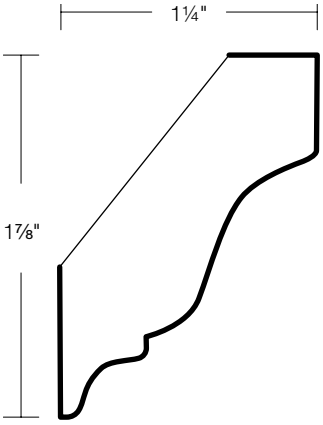

Alder, Cherry, Hickory, Maple, Oak, Walnut
CM8
CM10

DESIGN CONSIDERATIONS
- Solid wood
- Finished edges indicated by dark line

HOW TO ORDER
- This item is sold per 8 foot length and 10 foot length.
- The lengths are nominal. An 8 foot piece of moulding will have 93" of usable length. A 10 foot piece of moulding will have 117" of usable length.
- Pricing P-355

Block 12240 Large Crown Moulding

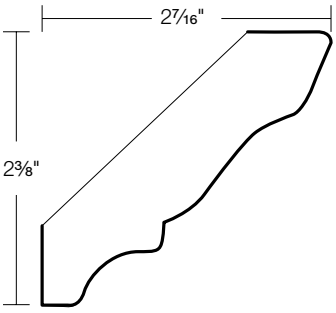

Alder, Cherry, Hickory, Maple, Oak, Walnut
LCM8
LCM10

DESIGN CONSIDERATIONS
- Solid wood
- Finished edges indicated by dark line

HOW TO ORDER
- This item is sold per 8 foot length and 10 foot length.
- The lengths are nominal. An 8 foot piece of moulding will have 93" of usable length. A 10 foot piece of moulding will have 117" of usable length.
- Pricing P-355

© Copyright StarMark Cabinetry FEBRUARY 2022

Block 12250 Wide Crown Moulding

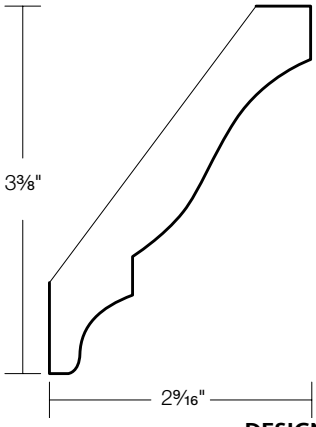

Alder, Cherry, Hickory, Maple, Oak, Walnut
WCM8
WCM10

DESIGN CONSIDERATIONS
- Solid wood
- Finished edges indicated by dark line

HOW TO ORDER
- This item is sold per 8 foot length and 10 foot length.
- The lengths are nominal. An 8 foot piece of moulding will have 93" of usable length. A 10 foot piece of moulding will have 117" of usable length.
- Pricing P-355

Block 12251 Tall Traditional Crown Moulding

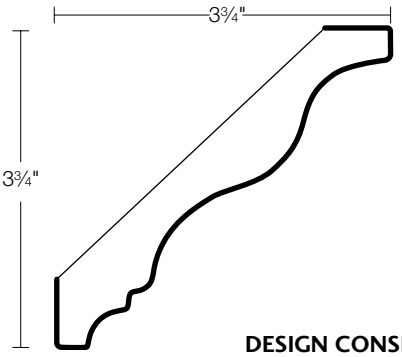

Alder, Cherry, Hickory, Maple, Oak, Walnut
TTCM8

DESIGN CONSIDERATIONS
- Solid wood
- Finished edges indicated by dark line
- Designed for 93" cabinet height to reach 96" ceiling height.
- 3¾" projection, up and out

HOW TO ORDER
- This item is sold per 8 foot nominal length. An 8 foot piece of moulding will have 93" of usable length.
- Pricing P-355

NOTE for blocks 12200 - 12950

- To specify these items in a finish that is different from the cabinetry, please order them using a separate order form.
- Moulding plans available on OneTouch in the Product Info + Resources section.

Block 12252 Extra Tall Crown Moulding

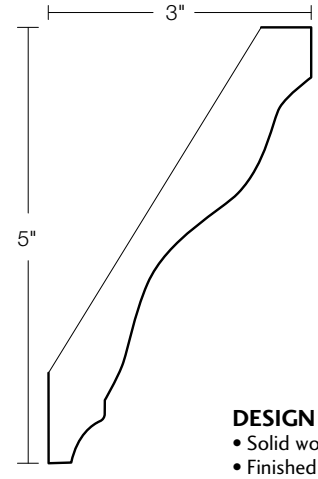

Alder, Cherry, Hickory, Maple, Oak, Walnut
XTCM8

DESIGN CONSIDERATIONS
- Solid wood
- Finished edges indicated by dark line

HOW TO ORDER
- This item is sold per 8 foot nominal length. An 8 foot piece of moulding will have 93" of usable length.
- Pricing P-355

Block 12254 Extra Wide Crown Moulding

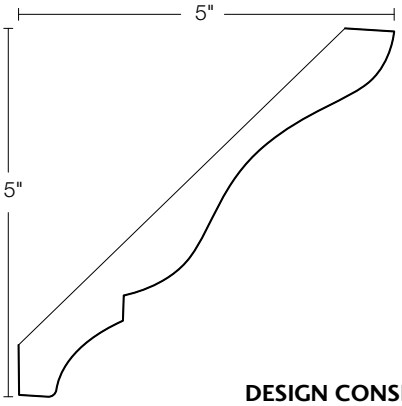

Alder, Cherry, Hickory, Maple, Oak, Walnut
XWCM8

DESIGN CONSIDERATIONS
- Solid wood
- Finished edges indicated by dark line

HOW TO ORDER
- This item is sold per 8 foot nominal length. An 8 foot piece of moulding will have 93" of usable length.
- Pricing P-355

© Copyright StarMark Cabinetry FEBRUARY 2022

Block 12260 Reed Crown Moulding

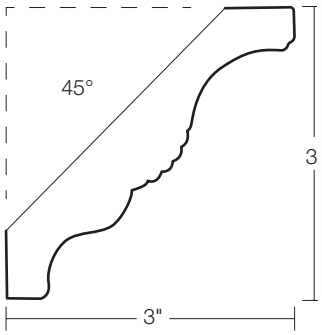

Alder, Cherry, Hickory, Maple, Oak, Walnut
RCM8
RCM10

DESIGN CONSIDERATIONS
- Solid wood
- Finished edges indicated by dark line

HOW TO ORDER
- This item is sold per 8 foot length and 10 foot length.
- The lengths are nominal. An 8 foot piece of moulding will have 93" of usable length. A 10 foot piece of moulding will have 117" of usable length.
- Pricing P-355

Block 12270 Classic Crown Moulding

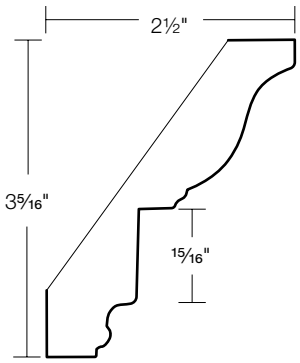

Alder, Cherry, Hickory, Maple, Oak, Walnut
CCM8
CCM10

DESIGN CONSIDERATIONS
- Solid wood
- Finished edges indicated by dark line

HOW TO ORDER
- This item is sold per 8 foot length and 10 foot length.
- The lengths are nominal. An 8 foot piece of moulding will have 93" of usable length. A 10 foot piece of moulding will have 117" of usable length.
- Pricing P-356

Block 12280 Arts & Craft Crown Moulding

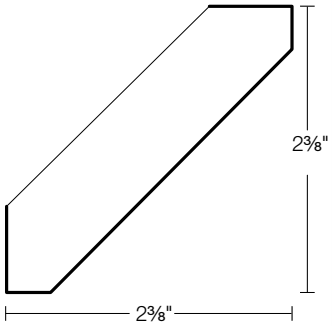

Alder, Cherry, Hickory, Maple, Oak, Quarter Sawn Oak, Walnut
ACCM8
ACCM10

DESIGN CONSIDERATIONS
- Solid wood
- Finished edges indicated by dark line

HOW TO ORDER
- This item is sold per 8 foot length and 10 foot length.
- The lengths are nominal. An 8 foot piece of moulding will have 93" of usable length. A 10 foot piece of moulding will have 117" of usable length.
- Pricing P-356

Block 12281 Tall Arts & Craft Crown Moulding

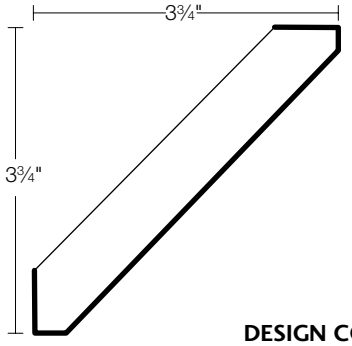

Alder, Cherry, Hickory, Maple, Oak, Walnut
TACM8

DESIGN CONSIDERATIONS
- Solid wood
- Finished edges indicated by dark line
- Designed for 93" cabinet height to reach 96" ceiling height.
- 3¾" projection, up and out

HOW TO ORDER
- This item is sold per 8 foot nominal length. An 8 foot piece of moulding will have 93" of usable length.
- Pricing P-356

© Copyright StarMark Cabinetry FEBRUARY 2022

Block 12399 Tall Cove Crown Moulding

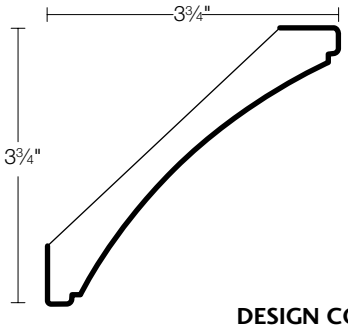

Alder, Cherry, Hickory, Maple, Oak, Walnut
TCCM8

DESIGN CONSIDERATIONS
- Solid wood
- Finished edges indicated by dark line
- Designed for 93" cabinet height to reach 96" ceiling height.
- 3¾" projection, up and out

HOW TO ORDER
- This item is sold per 8 foot nominal length. An 8 foot piece of moulding will have 93" of usable length.
- Pricing P-356

Block 12400 Large Cove Crown Moulding

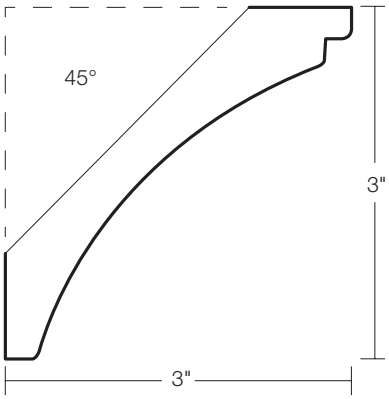

Alder, Cherry, Hickory, Maple,Oak, Quarter Sawn Oak, Walnut
LCCM8
LCCM10

DESIGN CONSIDERATIONS
- Solid wood
- Finished edges indicated by dark line

HOW TO ORDER
- This item is sold per 8 foot length and 10 foot length.
- The lengths are nominal. An 8 foot piece of moulding will have 93" of usable length. A 10 foot piece of moulding will have 117" of usable length.
- Pricing P-356

NOTE for blocks 12200 - 12950

- To specify these items in a finish that is different from the cabinetry, please order them using a separate order form.
- Moulding plans available on OneTouch in the Product Info + Resources section.

Block 12405 Medium Cove Crown Moulding

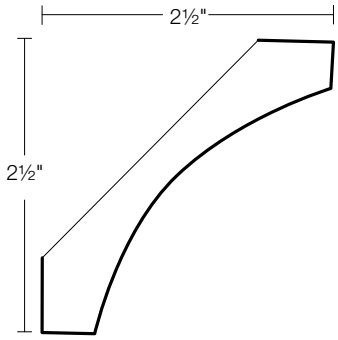

Alder, Cherry, Hickory, Maple, Oak, Walnut
MCCM8

DESIGN CONSIDERATIONS
- Solid wood
- Finished edges indicated by dark line

HOW TO ORDER
- This item is sold per 8 foot nominal length. An 8 foot piece of moulding will have 93" of usable length.
- Pricing P-356

Block 12410 Large Cove Moulding

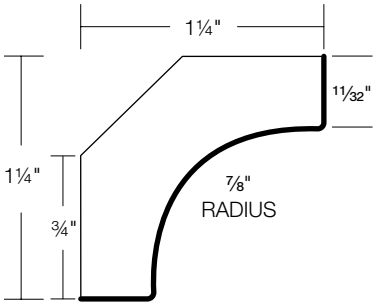

Alder, Cherry, Hickory, Maple, Oak, Quarter Sawn Oak, Walnut
LC8
LC10

DESIGN CONSIDERATIONS
- Solid wood
- Can be used with LCOM or LCIM
- Finished edges indicated by dark line

HOW TO ORDER
- This item is sold per 8 foot length and 10 foot length.
- The lengths are nominal. An 8 foot piece of moulding will have 93" of usable length. A 10 foot piece of moulding will have 117" of usable length.
- Pricing P-356

© Copyright StarMark Cabinetry FEBRUARY 2022

Block 12420 Cove Moulding

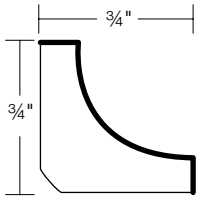

Alder, Cherry, Hickory, Maple, Oak, Walnut
COVE8
COVE10

DESIGN CONSIDERATIONS
- Solid wood
- Finished edges indicated by dark line
- Use Oak for Quarter Sawn Oak

HOW TO ORDER
- This item is sold per 8 foot length and 10 foot length.
- The lengths are nominal. An 8 foot piece of moulding will have 93" of usable length. A 10 foot piece of moulding will have 117" of usable length.
- Pricing P-356

Block 12430 Inside Radius Large Cove Moulding

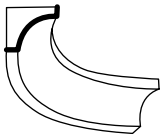

Cherry, Hickory, Maple, Oak, Walnut
LCIMO12

DESIGN CONSIDERATIONS
- Solid wood
- 12" radius
- To be used with curved in wall cabinets
- Finished edges indicated by dark line
- Use Cherry for Alder cabinetry

HOW TO ORDER
- Pricing P-356

Block 12431 Large Cove Crown Inside Radius Moulding

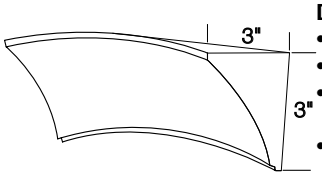

Cherry, Hickory, Maple, Oak, Walnut
LCCIMO12

DESIGN CONSIDERATIONS
- Solid wood
- Finished edges indicated by dark line
- Designed to coordinate with LCCM8 block 12400.
- Use for cabinets in blocks 2400 and 2420
- 12" radius

HOW TO ORDER
- Pricing P-356

Block 12439 Large Cove Crown Outside Radius Moulding

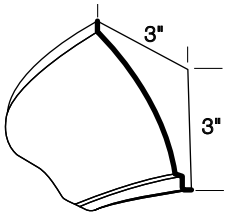

Cherry, Hickory, Maple, Oak, Walnut
LCCOMO12
LCCOMO24

DESIGN CONSIDERATIONS
- Solid wood
- Finished edges indicated by dark line
- Designed to coordinate with LCCM8 block 12400.
- Use for cabinets in blocks 2430, 2440, 2450 and 5400
- 12" or 24" radius

HOW TO ORDER
- Pricing P-356

Block 12440 Outside Radius Large Cove Moulding

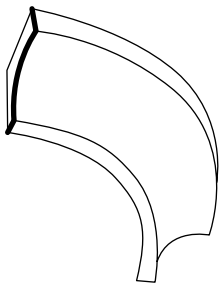

Cherry, Hickory, Maple, Oak, Walnut
LCOMO12
LCOMO24
LCOM1.5

DESIGN CONSIDERATIONS
- Solid wood
- 1½", 3" or 12" radius
- To be used with curved out wall cabinets and CWEP1.5 and CWEP3
- Finished edges indicated by dark line
- Use Cherry for Alder cabinetry

HOW TO ORDER
- Pricing P-357

Block 12450 Large Cove Moulding Spacer

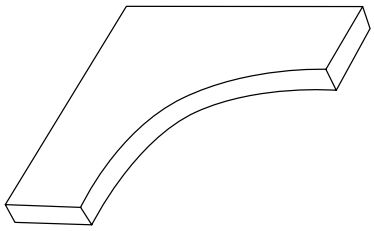

Cherry, Hickory, Maple, Oak, Walnut
LCMS

DESIGN CONSIDERATIONS
- ⅛" solid wood
- This spacer is used between LC and LCOM or LCIM. It will extend ⅛" beyond LC and LCOM or LCIM.
- Use Cherry for Alder cabinetry

HOW TO ORDER
- Pricing P-357

© Copyright StarMark Cabinetry FEBRUARY 2022

Block 12460 Radius Decorator Moulding

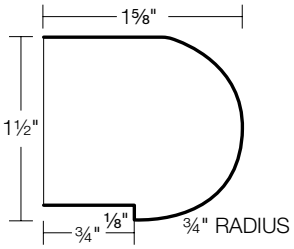

Cherry, Hickory, Maple, Oak, Walnut
RDM8
RDM10

DESIGN CONSIDERATIONS
- Solid wood
- Overlaps ⅛" on face frame of cabinet
- ¾" radius
- Finished edges indicated by dark line
- Use Cherry for Alder cabinetry

HOW TO ORDER
- This item is sold per 8 foot length and 10 foot length.
- The lengths are nominal. An 8 foot piece of moulding will have 93" of usable length. A 10 foot piece of moulding will have 117" of usable length.

Block 12470 Radius Decorator Moulding Spacer

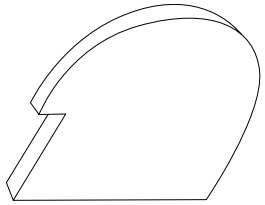

Cherry, Hickory, Maple, Oak, Walnut
RDMS

DESIGN CONSIDERATIONS
- ⅛" solid wood
- This spacer is used between RDM and RDOM. It will extend ⅛" beyond RDM and RDOM.
- Use Cherry for Alder cabinetry

HOW TO ORDER
- Pricing P-357

Block 12480 Outside Radius Decorator Moulding

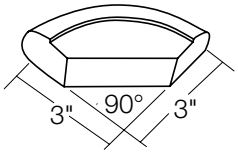

Cherry, Hickory, Maple, Oak, Walnut
RDOM1.5
RDOM3
RDOM12

DESIGN CONSIDERATIONS
- Solid wood
- ¾" radius edge
- 1½" or 3" outside radius
- Can be used with CWEP1 or CWEP3 (block 11800) and FCWEP1or FCWEP3 (block 11810)
- RDOM12 can be used with curved out wall cabinets
- Use Cherry for Alder cabinetry

HOW TO ORDER
- Pricing P-357

NOTE for blocks 12200 - 12950

- To specify these items in a finish that is different from the cabinetry, please order them using a separate order form.
- Moulding plans available on OneTouch in the Product Info + Resources section.

Block 12550 Shoe Moulding

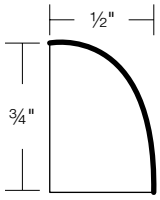

Alder, Cherry, Hickory, Maple, Oak, Walnut
SHOE8
SHOE10

DESIGN CONSIDERATIONS
- Solid wood
- Finished edges indicated by dark line
- Use Oak for Quarter Sawn Oak

HOW TO ORDER
- This item is sold per 8 foot length and 10 foot length.
- The lengths are nominal. An 8 foot piece of moulding will have 93" of usable length. A 10 foot piece of moulding will have 117" of usable length.
- Pricing P-357

Block 12560 Stop Moulding

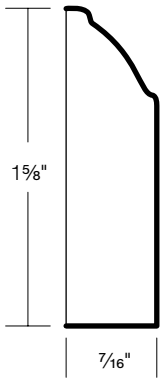

Alder, Cherry, Hickory, Maple, Oak, Walnut
STOP8
STOP10

DESIGN CONSIDERATIONS
- Solid wood
- Finished edges indicated by dark line

HOW TO ORDER
- This item is sold per 8 foot length and 10 foot length.
- The lengths are nominal. An 8 foot piece of moulding will have 93" of usable length. A 10 foot piece of moulding will have 117" of usable length.
- Pricing P-357

© Copyright StarMark Cabinetry FEBRUARY 2022

Block 12570 Panel Moulding

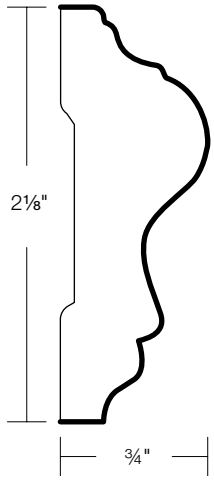

Alder, Cherry, Hickory, Maple, Oak, Walnut
PLM8
PLM10

DESIGN CONSIDERATIONS
- Solid wood
- Moulding can be used as a chair rail moulding
- Finished edges indicated by dark line

HOW TO ORDER
- This item is sold per 8 foot length and 10 foot length.
- The lengths are nominal. An 8 foot piece of moulding will have 93" of usable length. A 10 foot piece of moulding will have 117" of usable length.
- Pricing P-357

Block 12572 Panel Cap Moulding - A

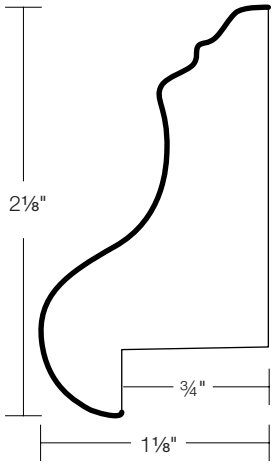

Alder, Cherry, Hickory, Maple, Oak, Walnut
PCMA8

DESIGN CONSIDERATIONS
- Solid wood
- Finished edges indicated by dark line

HOW TO ORDER
- This item is sold per 8 foot nominal length. An 8 foot piece of moulding will have 93" of usable length.
- Pricing P-357

Block 12574 Panel Cap Moulding - B

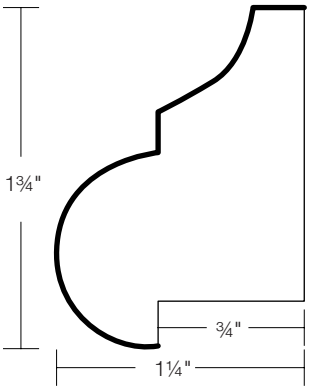

Alder, Cherry, Hickory, Maple, Oak, Walnut
PCMB8

DESIGN CONSIDERATIONS
- Solid wood
- Finished edges indicated by dark line

HOW TO ORDER
- This item is sold per 8 foot nominal length. An 8 foot piece of moulding will have 93" of usable length.
- Pricing P-357

Block 12576 Panel Cap Moulding - C

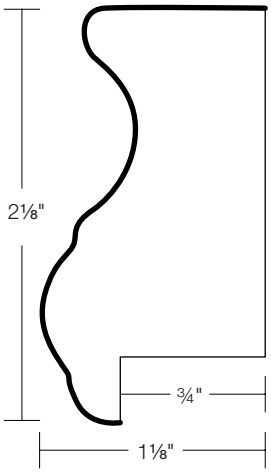

Alder, Cherry, Hickory, Maple, Oak, Walnut
PCMC8

DESIGN CONSIDERATIONS
- Solid wood
- Finished edges indicated by dark line

HOW TO ORDER
- This item is sold per 8 foot nominal length. An 8 foot piece of moulding will have 93" of usable length.
- Pricing P-357

© Copyright StarMark Cabinetry FEBRUARY 2022

Block 12580 Large Base Moulding

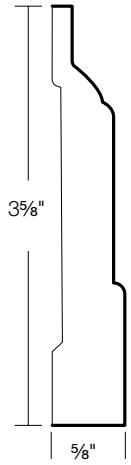

Cherry, Hickory, Maple, Oak, Walnut
LBM8
LBM10

DESIGN CONSIDERATIONS
- Solid wood
- Finished edges indicated by dark line

HOW TO ORDER
- This item is sold per 8 foot length and 10 foot length.
- The lengths are nominal. An 8 foot piece of moulding will have 93" of usable length. A 10 foot piece of moulding will have 117" of usable length.
- Pricing P-358

Block 12582 Base Moulding - Stepped

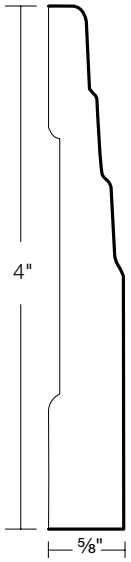

Alder, Cherry, Hickory, Maple, Oak, Walnut
MBMA8

DESIGN CONSIDERATIONS
- Solid wood
- Finished edges indicated by dark line

HOW TO ORDER
- This item is sold per 8 foot nominal length. An 8 foot piece of moulding will have 93" of usable length.
- Pricing P-358

NOTE for blocks 12200 - 12950

- To specify these items in a finish that is different from the cabinetry, please order them using a separate order form.
- Moulding plans available on OneTouch in the Product Info + Resources section.

Block 12584 Base Moulding - Beaded

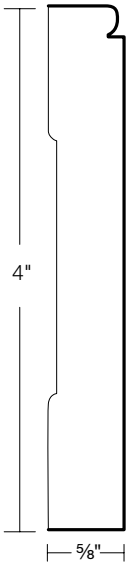

Alder, Cherry, Hickory, Maple, Oak, Walnut
MBMB8

DESIGN CONSIDERATIONS
- Solid wood
- Finished edges indicated by dark line

HOW TO ORDER
- This item is sold per 8 foot nominal length. An 8 foot piece of moulding will have 93" of usable length.
- Pricing P-358

Block 12586 Base Moulding - Regent

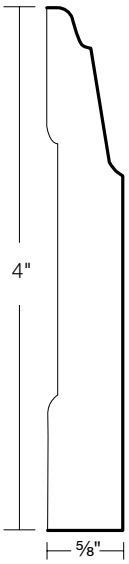

Alder, Cherry, Hickory, Maple, Oak, Walnut
MBMC8

DESIGN CONSIDERATIONS
- Solid wood
- Finished edges indicated by dark line

HOW TO ORDER
- This item is sold per 8 foot nominal length. An 8 foot piece of moulding will have 93" of usable length.
- Pricing P-358

© Copyright StarMark Cabinetry FEBRUARY 2022

Block 12588 Base Furniture Moulding

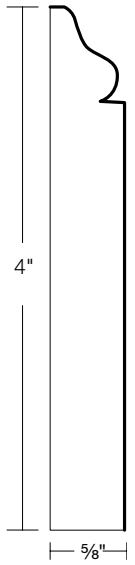

Alder, Cherry, Hickory, Maple, Oak, Walnut
MBFM8

DESIGN CONSIDERATIONS
- Solid wood
- Finished edges indicated by dark line

HOW TO ORDER
- This item is sold per 8 foot nominal length. An 8 foot piece of moulding will have 93" of usable length.
- Pricing P-358

Block 12590 Furniture Base Moulding

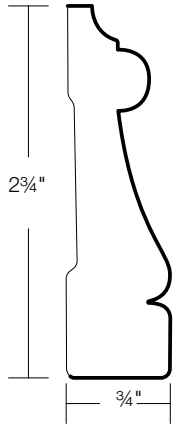

Cherry, Hickory, Maple, Oak, Walnut
FURN8
FURN10

DESIGN CONSIDERATIONS
- Solid wood
- Moulding to be used with 4½" and 5½" wide bottom rail
- Finished edges indicated by dark line
- Not to be used with 3" wide bottom rail

HOW TO ORDER
- This item is sold per 8 foot length and 10 foot length.
- The lengths are nominal. An 8 foot piece of moulding will have 93" of usable length. A 10 foot piece of moulding will have 117" of usable length.
- Pricing P-358

Block 12600 ¾" Solid Stock

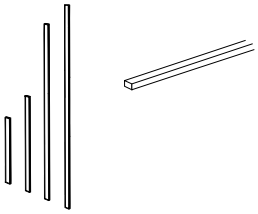

DESIGN CONSIDERATIONS
3", 6", 9" and 12" Widths
- For optional edge detail see block 12610
- If no edge is specified, we will finish face and one long edge
- Special sizes available. See block 12610 for special cuts and pricing.
- See block 12605 for finished edges

HOW TO ORDER
- Pricing P-358

SSTK324	**SSTK624**	**SSTK924**	**SSTK1224**
SSTK348	**SSTK648**	**SSTK948**	**SSTK1248**
SSTK372	**SSTK672**	**SSTK972**	**SSTK1272**
SSTK396	**SSTK696**	**SSTK996**	**SSTK1296**
SSTK3102	**SSTK6102**	**SSTK9102**	**SSTK12102**
SSTK3120	**SSTK6120**	**SSTK9120**	**SSTK12120**

Block 12605 Finished Sides and Edges

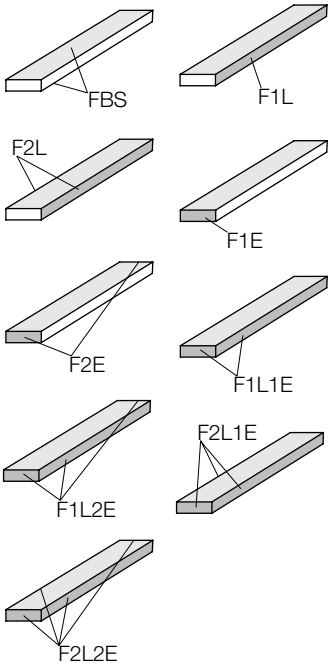

DESIGN CONSIDERATIONS
- Available on plywood shelving, solid shelving and solid stock

HOW TO ORDER
- Pricing P-359

FINISHED SIDES AND EDGES

FBS Finish both sides
F1L Finish one long edge
F2L Finish two long edges
F1E Finish one short edge
F2E Finish two short edges
F1L1E Finish one long and one short edge
F1L2E Finish one long and two short edges
F2L1E Finish two long and one short edge
F2L2E Finish two long and two short edges

© Copyright StarMark Cabinetry FEBRUARY 2022

Block 12610 Solid Stock Treatments

Cutting solid stock down

SS-CUT

DESIGN CONSIDERATIONS

- Standard size solid stock (block 12600) can be cut to desired dimension
- L option includes radius on top and bottom. LTOP option includes radius on top only.

HOW TO ORDER

- Specify **SS-CUT** and the dimension required in the Special Information section
- Add SS-CUT charge to cost of solid stock
- Pricing P-359

DESIGN CONSIDERATIONS

- Standard size solid stock (block 12600) can be routed to achieve a decorative edge
- Options are:

AERO	Coordinates with Aero, Glendale and Gallant door profiles
BCE	Beveled
DCE	Coordinates with Griffon and Decorator Edge door profile
F	Coordinates with Traditional Overlay square frame doors
H	Coordinates with Hampton, Hanover and Hudson door profiles
L	Coordinates with
LTOP	Bedford, Bonita, Bridgeport, Calais, Chesapeake, Clifton, Coralville, Cosmopolitan, Farmington, Fullerton, Laguna, Lancaster, Lehigh, Manhattan, Milan, Oakley, Orian, Osprey, Overland, Regal, Renwick, Richland, Ridgeville, Roanoke, Roman, Roseville, Tabor, Taft, Tempo, Tipton, Tucson, Valiant, Ventura, Verona, Waterfall, Waynesville, and Westerly door profiles
M	Coordinates with Monroe door profile
Q	Coordinates with Altamonte, Arlington, Bell Gardens, Bethany, Brisbane, Ellington, Peabody, Prescott, Princeton, Redcliff, Syracuse, Venice and Viola door profiles
Z2	Coordinates with Modern Overlay square frame doors

HOW TO ORDER

- Specify **RSSE-_____** in the Special Information section
- Add RSSE charge to cost of solid stock
- Pricing P-359

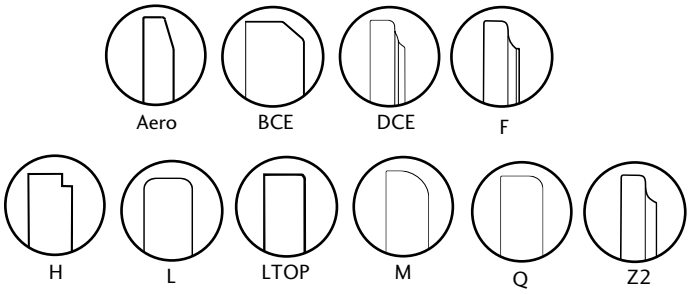

Routing solid stock edge

RSSE-AERO
RSSE-BCE
RSSE-DCE
RSSE-F
RSSE-H
RSSE-L
RSSE-LTOP
RSSE-M
RSSE-Q
RSSE-Z2

Block 12615 Mirror Moulding

MM4
MM5
MM6
MM7

DESIGN CONSIDERATIONS

- Use to frame large mirrors on the job site
- Stile and rail moulding material matches the door style and edge profile specified on the cabinetry order.
- Stile and rail moulding material is routed to accept mirror
- When calculating the length needed, take into account the width of the stile and rail moulding material and the mitering.
- Mirror not included
- Finished edges indicated by dark line

HOW TO ORDER

- Sold in 4', 5', 6' and 7' lengths
- Specify quantity of each moulding length. For example, for a 60" x 36" mirror, specify two MM6 lengths and two MM4 lengths.
- Pricing P-359

© Copyright StarMark Cabinetry FEBRUARY 2022

Block 12620 Base Return Moulding

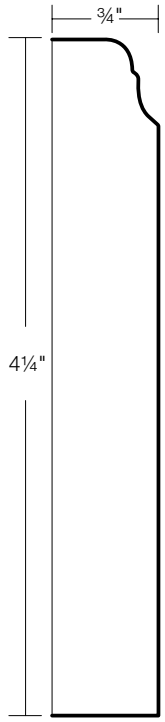

Alder, Cherry, Hickory, Maple, Oak, Walnut
MBRM8
MBRM10

DESIGN CONSIDERATIONS

4¼" High

- To be used as a return with brackets or a skirt
- Decorator edge profile standard
- To achieve lengths of less than 8', order solid stock (block 12600) with DCE edge (block 12610).

HOW TO ORDER

- This item is sold per 8 foot length and 10 foot length.
- The lengths are nominal. An 8 foot piece of moulding will have 93" of usable length. A 10 foot piece of moulding will have 117" of usable length.
- Pricing P-359

Block 12630 Skirt Base Moulding

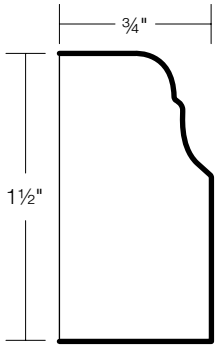

Alder, Cherry, Hickory, Maple, Oak, Walnut
BM8
BM10

DESIGN CONSIDERATIONS

- BM8 is used as a bridge between bracket feet to create a skirting effect with parts when the design requires a skirt longer than the maximum 72"
- Bracket feet with BM8 or BM10 allows you to plan to 8 ft. or 10 ft. length; there will be seams at joinery
- Decorator Edge profile is standard

HOW TO ORDER

- This item is sold per 8 foot length and 10 foot length.
- The lengths are nominal. An 8 foot piece of moulding will have 93" of usable length. A 10 foot piece of moulding will have 117" of usable length.
- Pricing P-359

© Copyright StarMark Cabinetry FEBRUARY 2022

Block 12640 Countertop Edge

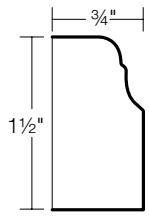

Decorator
Cherry, Hickory, Maple, Oak, Walnut
DCE8
DCE10

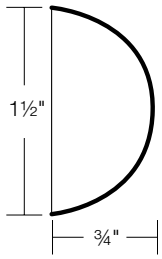

¾" radius edge
Radius
Cherry, Hickory, Maple, Oak, Walnut
RCE8
RCE10

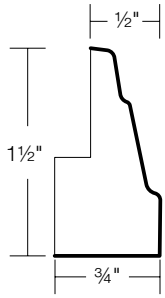

Special
Cherry, Hickory, Maple, Oak, Walnut
SPCE8
SPCE10

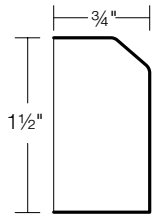

Bevel
Cherry, Hickory, Maple, Oak, Walnut
BCE8
BCE10

DESIGN CONSIDERATIONS
- Solid wood
- To be used as wood top edging
- Finished edges indicated by dark line
- Use Cherry for Alder cabinetry

HOW TO ORDER
- This item is sold per 8 foot length and 10 foot length.
- The lengths are nominal. An 8 foot piece of moulding will have 93" of usable length. A 10 foot piece of moulding will have 117" of usable length.
- Pricing P-360

Block 12650 Corner Moulding

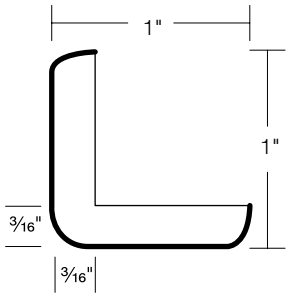

Alder, Cherry, Hickory, Maple, Oak, Walnut
CORN8
CORN10

DESIGN CONSIDERATIONS
- Solid wood
- 90 degree outside corner
- Finished edges indicated by dark line
- Use Oak for Quarter Sawn Oak

HOW TO ORDER
- This item is sold per 8 foot length and 10 foot length.
- The lengths are nominal. An 8 foot piece of moulding will have 93" of usable length. A 10 foot piece of moulding will have 117" of usable length.
- Pricing P-360

Block 12655 Angled Corner Panel Moulding

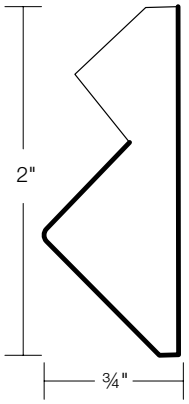

Alder, Cherry, Hickory, Maple, Oak, Walnut
ACPM8

DESIGN CONSIDERATIONS
- Solid wood
- Finished edges indicated by dark line
- For use with corner installation. See below.

HOW TO ORDER
- This item is sold per 8 foot nominal length. An 8 foot piece of moulding will have 93" of usable length.
- Pricing P-360

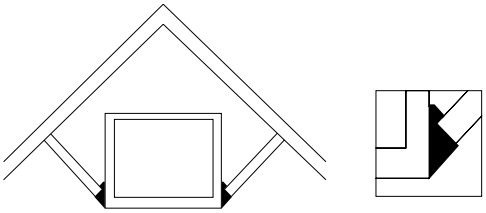

© Copyright StarMark Cabinetry FEBRUARY 2022

NOTE for blocks 12200 - 12950

- To specify these items in a finish that is different from the cabinetry, please order them using a separate order form.
- Moulding plans available on OneTouch in the Product Info + Resources section.

Block 12660 Angled Inside Corner Moulding

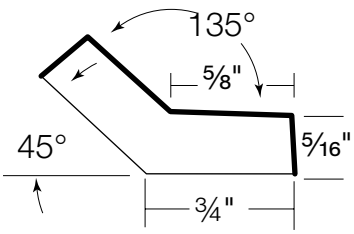

Alder, Cherry, Hickory, Maple, Oak, Walnut
AICORN8

DESIGN CONSIDERATIONS
- Solid wood
- 45 degree inside corner
- Finished edges indicated by dark line

HOW TO ORDER
- This item is sold per 8 foot nominal length. An 8 foot piece of moulding will have 93" of usable length.
- Pricing P-360

Block 12670 Angled Outside Corner Moulding

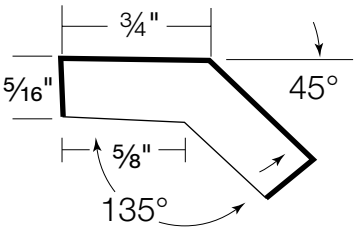

Alder, Cherry, Hickory, Maple, Oak, Walnut
AOCORN8

DESIGN CONSIDERATIONS
- Solid wood
- 45 degree outside corner
- Finished edges indicated by dark line
- Use Oak for Quarter Sawn Oak

HOW TO ORDER
- This item is sold per 8 foot nominal length. An 8 foot piece of moulding will have 93" of usable length.
- Pricing P-360

Block 12680 Flat or Scribe Moulding

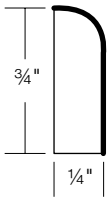

Alder, Cherry, Hickory, Maple, Oak, Walnut
FLAT8
FLAT10

DESIGN CONSIDERATIONS
- Solid wood
- Finished edges indicated by dark line
- Use Oak for Quarter Sawn Oak

HOW TO ORDER
- This item is sold per 8 foot length and 10 foot length.
- The lengths are nominal. An 8 foot piece of moulding will have 93" of usable length. A 10 foot piece of moulding will have 117" of usable length.
- Pricing P-360

Block 12682 L Edge Small Scribe Moulding

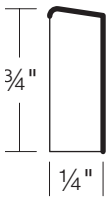

Alder, Cherry, Hickory, Maple, Oak, Quarter Sawn Oak, Walnut
LSCRS8

DESIGN CONSIDERATIONS
- Solid wood
- Finished edges indicated by dark line

HOW TO ORDER
- This item is sold per 8 foot nominal length. An 8 foot piece of moulding will have 93" of usable length.
- Pricing P-360

© Copyright StarMark Cabinetry FEBRUARY 2022

NOTE for blocks 12200 - 12950

- To specify these items in a finish that is different from the cabinetry, please order them using a separate order form.
- Moulding plans available on OneTouch in the Product Info + Resources section.

Block 12684 L Edge Large Scribe Moulding

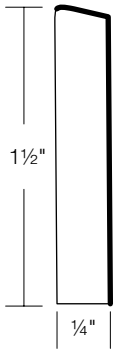

Alder, Cherry, Hickory, Maple,Oak, Quarter Sawn Oak, Walnut
LSCRL8

DESIGN CONSIDERATIONS
- Solid wood
- Finished edges indicated by dark line

HOW TO ORDER
- This item is sold per 8 foot nominal length. An 8 foot piece of moulding will have 93" of usable length.
- Pricing P-360

Block 12690 Large Flat Moulding

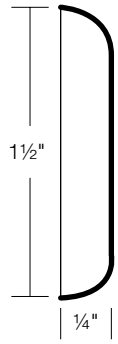

Alder, Cherry, Hickory, Maple, Oak, Quarter Sawn Oak, Walnut
LFLAT8
LFLAT10

DESIGN CONSIDERATIONS
- Solid wood
- Finished edges indicated by dark line

HOW TO ORDER
- This item is sold per 8 foot length and 10 foot length.
- The lengths are nominal. An 8 foot piece of moulding will have 93" of usable length. A 10 foot piece of moulding will have 117" of usable length.
- Pricing P-361

Block 12695 Beaded Panel Moulding

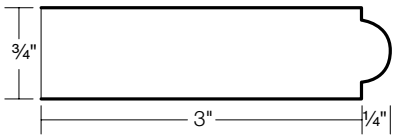

Alder, Cherry, Hickory, Maple, Oak, Walnut
BPM8

DESIGN CONSIDERATIONS
- Solid wood
- Finished edges indicated by dark line

HOW TO ORDER
- This item is sold per 8 foot nominal length. An 8 foot piece of moulding will have 93" of usable length.
- Pricing P-361

Block 12700 Flush Moulding

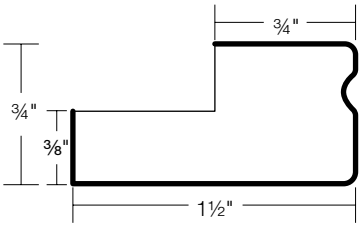

Alder, Cherry, Hickory, Maple, Oak, Walnut
FM8
FM10

DESIGN CONSIDERATIONS
- Solid wood
- For use as moulding under a wall cabinet
- Can be used in conjunction with FMP. See block 11070.
- Finished edges indicated by dark line

HOW TO ORDER
- This item is sold per 8 foot length and 10 foot length.
- The lengths are nominal. An 8 foot piece of moulding will have 93" of usable length. A 10 foot piece of moulding will have 117" of usable length.
- Pricing P-361

© Copyright StarMark Cabinetry FEBRUARY 2022

Block 12701 Recess Small Light Shield Moulding I

NEW!

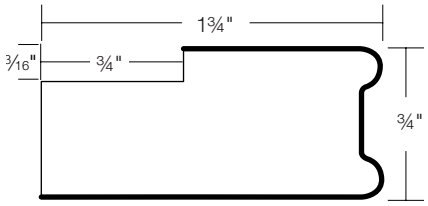

Alder, Cherry, Hickory, Maple, Oak, Walnut
LSMRS8

DESIGN CONSIDERATIONS
- Solid wood
- Finished edges indicated by dark line
- For use as moulding under a wall cabinet with Modern Overlay doors

HOW TO ORDER
- This item is sold per 8 foot nominal length. An 8 foot piece of moulding will have 93" of useable length.
- Pricing P-361

Block 12702 Bead Small Light Shield Moulding I

NEW!

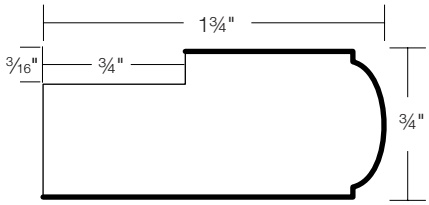

Alder, Cherry, Hickory, Maple, Oak, Walnut
LSMBS8

DESIGN CONSIDERATIONS
- Solid wood
- Finished edges indicated by dark line
- For use as moulding under a wall cabinet with Modern Overlay doors

HOW TO ORDER
- This item is sold per 8 foot nominal length. An 8 foot piece of moulding will have 93" of useable length.
- Pricing P-361

Block 12703 L Edge Small Light Shield Moulding I

NEW!

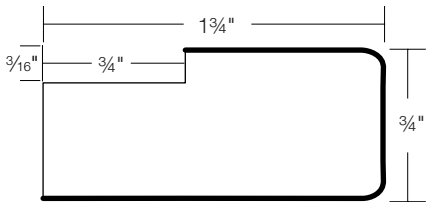

Alder, Cherry, Hickory, Maple, Oak, Walnut
LSMLS8

DESIGN CONSIDERATIONS
- Solid wood
- Finished edges indicated by dark line
- For use as moulding under a wall cabinet with Modern Overlay doors

HOW TO ORDER
- This item is sold per 8 foot nominal length. An 8 foot piece of moulding will have 93" of useable length.
- Pricing P-361

Block 12710 Z2 Light Shield Moulding I

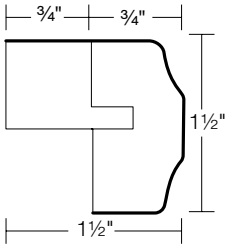

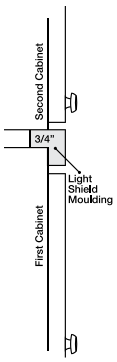

Alder, Cherry, Hickory, Maple, Oak, Walnut
LSMZ2
LSMZ210

DESIGN CONSIDERATIONS
- Solid wood moulding with basswood installation strip attached to backside
- For use as moulding under a wall cabinet or in between stacked cabinets. See illustration at left.
- Finished edges indicated by dark line
- Coordinates with San Dimas, Sundance and Modern Overlay square frame doors

HOW TO ORDER
- This item is sold per 8 foot length and 10 foot length.
- The lengths are nominal. An 8 foot piece of moulding will have 93" of usable length. A 10 foot piece of moulding will have 117" of usable length.
- Pricing P-361

Block 12720 DC Light Shield Moulding I

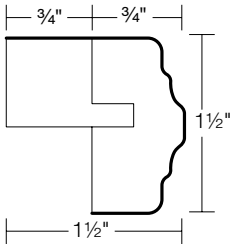

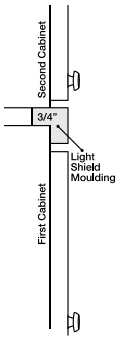

Alder, Cherry, Hickory, Maple, Oak, Walnut
LSMDC
LSMDC10

DESIGN CONSIDERATIONS
- Solid wood moulding with basswood installation strip attached to backside
- For use as moulding under a wall cabinet or in between stacked cabinets. See illustration at left.
- Finished edges indicated by dark line
- Coordinates with Griffon and Decorator Edge door profile

HOW TO ORDER
- This item is sold per 8 foot length and 10 foot length.
- The lengths are nominal. An 8 foot piece of moulding will have 93" of useable length. A 10 foot piece of moulding will have 117" of useable length.
- Pricing P-361

© Copyright StarMark Cabinetry FEBRUARY 2022

Block 12730 BD Light Shield Moulding

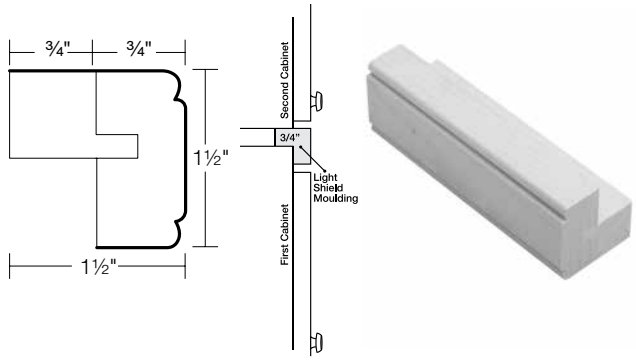

Alder, Cherry, Hickory, Maple, Oak, Walnut
LSMBD
LSMBD10

DESIGN CONSIDERATIONS

- Solid wood moulding with basswood installation strip attached to backside
- For use as moulding under a wall cabinet or in between stacked cabinets. See illustration at left.
- Finished edges indicated by dark line
- Coordinates with Bethany and Brisbane door styles.

HOW TO ORDER

- This item is sold per 8 foot length and 10 foot length.
- The lengths are nominal. An 8 foot piece of moulding will have 93" of usable length. A 10 foot piece of moulding will have 117" of usable length.
- Pricing P-361

Block 12740 PW Light Shield Moulding

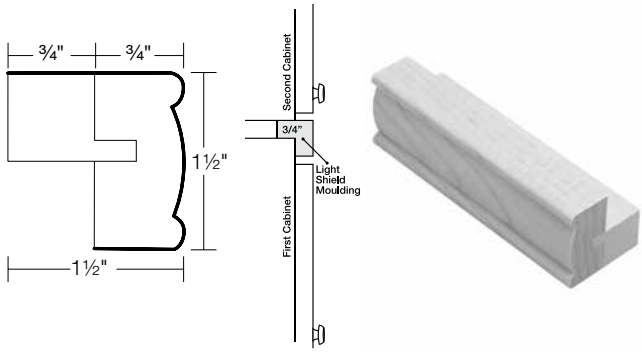

Alder, Cherry, Hickory, Maple, Oak, Walnut
LSMPW
LSMPW10

DESIGN CONSIDERATIONS

- Solid wood moulding with basswood installation strip attached to backside
- For use as moulding under a wall cabinet or in between stacked cabinets. See illustration at left.
- Finished edges indicated by dark line
- Coordinates with Altamonte, Arlington, Bell Gardens, Bethany, Brisbane, Ellington, Peabody, Prescott, Princeton, Redcliff, Syracuse, Venice and Viola door styles.

HOW TO ORDER

- This item is sold per 8 foot length and 10 foot length.
- The lengths are nominal. An 8 foot piece of moulding will have 93" of usable length. A 10 foot piece of moulding will have 117" of usable length.
- Pricing P-361

NOTE for blocks 12200 - 12950

- To specify these items in a finish that is different from the cabinetry, please order them using a separate order form.
- Moulding plans available on OneTouch in the Product Info + Resources section.

Block 12742 Recess Light Shield Moulding

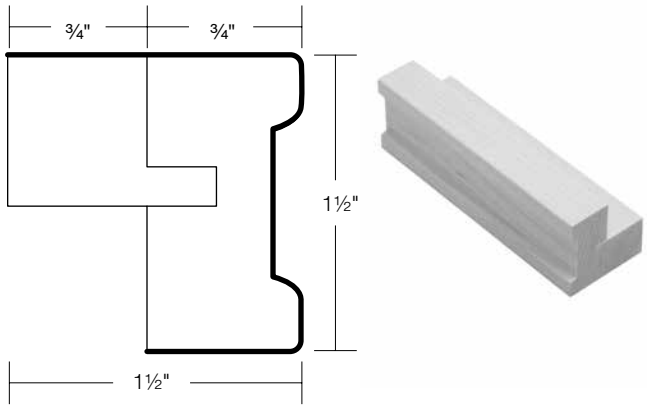

Alder, Cherry, Hickory, Maple, Oak, Walnut
LSMR8

DESIGN CONSIDERATIONS

- Solid wood moulding with basswood installation strip attached to backside
- Finished edges indicated by dark line
- Coordinates with Chesapeake, Clifton, Coralville and Cosmopolitan.

HOW TO ORDER

- This item is sold per 8 foot nominal length. An 8 foot piece of moulding will have 93" of usable length.
- Pricing P-361

Block 12744 L Edge Light Shield Moulding

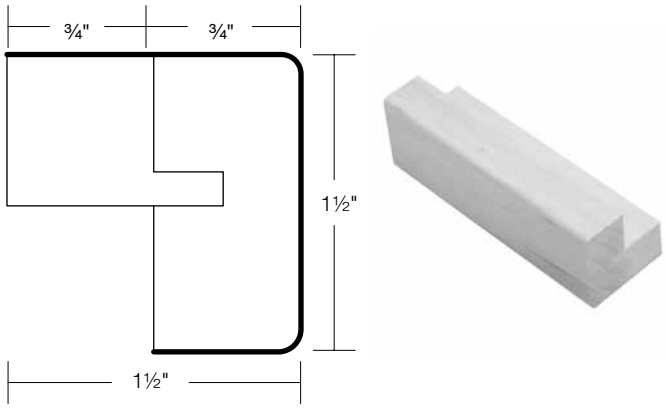

Alder, Cherry, Hickory, Maple, Oak, Walnut
LSML8

DESIGN CONSIDERATIONS

- Solid wood moulding with basswood installation strip attached to backside
- Finished edges indicated by dark line

HOW TO ORDER

- This item is sold per 8 foot nominal length. An 8 foot piece of moulding will have 93" of usable length.
- Pricing P-362

© Copyright StarMark Cabinetry FEBRUARY 2022

Block 12750 Beaded Light Shield Moulding

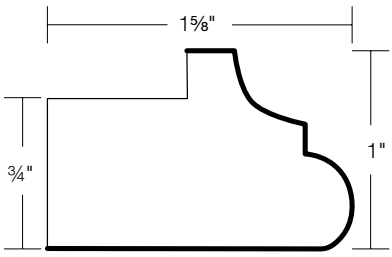

Alder, Cherry, Hickory, Maple, Oak, Walnut
BLSM8
BLSM10

DESIGN CONSIDERATIONS
- Solid wood
- For use as moulding under a wall cabinet
- Finished edges indicated by dark line

HOW TO ORDER
- This item is sold per 8 foot length and 10 foot length.
- The lengths are nominal. An 8 foot piece of moulding will have 93" of usable length. A 10 foot piece of moulding will have 117" of usable length.
- Pricing P-362

Block 12760 Dentil Moulding

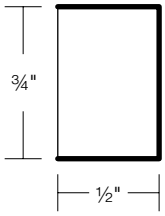

Dentil Moulding
Cherry, Hickory, Maple, Oak
DM8

DESIGN CONSIDERATIONS
- Solid wood
- Finished edges indicated by dark line
- Use Cherry for Alder and Walnut cabinetry

HOW TO ORDER
- This item is sold per 8 foot nominal length. An 8 foot piece of moulding will have 93" of usable length.
- Pricing P-362

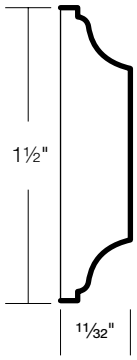

Large Box Dentil Moulding
Beech, Cherry, Maple
LDM8

DESIGN CONSIDERATIONS
- Finished edges indicated by dark line
- Use Cherry for Alder and Walnut cabinetry, and Beech for Hickory and Oak cabinetry

HOW TO ORDER
- This item is sold per 8 foot nominal length. An 8 foot piece of moulding will have 93" of usable length.
- Pricing P-362

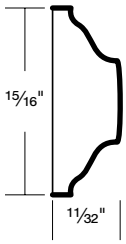

Small Box Dentil Moulding
Beech, Cherry, Maple
SDM8

DESIGN CONSIDERATIONS
- Can be used with CCM8 (Block 12270)
- Finished edges indicated by dark line
- Use Cherry for Alder and Walnut cabinetry, and Beech for Hickory and Oak cabinetry

HOW TO ORDER
- This item is sold per 8 foot nominal length. An 8 foot piece of moulding will have 93" of usable length.
- Pricing P-362

© Copyright StarMark Cabinetry FEBRUARY 2022

NOTE for blocks 12200 - 12950

- To specify these items in a finish that is different from the cabinetry, please order them using a separate order form.
- Moulding plans available on OneTouch in the Product Info + Resources section.

Block 12770 Acanthus Moulding

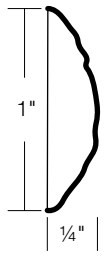

Beech, Cherry, Maple
LACN8

DESIGN CONSIDERATIONS
- Finished edges indicated by dark line
- Use Cherry for Alder and Walnut cabinetry, and Beech for Hickory and Oak cabinetry

HOW TO ORDER
- This item is sold per 8 foot nominal length. An 8 foot piece of moulding will have 93" of usable length.
- Pricing P-362

NOTE for blocks 12200 - 12950

- To specify these items in a finish that is different from the cabinetry, please order them using a separate order form.
- Moulding plans available on OneTouch in the Product Info + Resources section.

Block 12780 Beads and Reeds Moulding

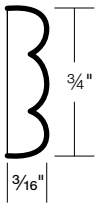

Beech, Cherry, Maple
BREED8

DESIGN CONSIDERATIONS
- Can be used with CCM8 (Block 12270)
- Finished edges indicated by dark line
- Use Cherry for Alder and Walnut cabinetry, and Beech for Hickory and Oak cabinetry

HOW TO ORDER
- This item is sold per 8 foot nominal length. An 8 foot piece of moulding will have 93" of usable length.
- Pricing P-362

Block 12790 Key Pattern Moulding

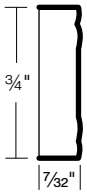

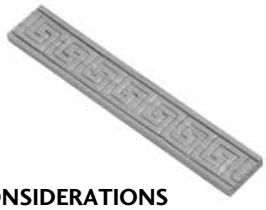

Cherry, Maple
KEY8

DESIGN CONSIDERATIONS
- Can be used with CCM8 (Block 12270)
- Finished edges indicated by dark line
- Use Cherry for Alder and Walnut cabinetry, and Maple for Hickory and Oak cabinetry

HOW TO ORDER
- This item is sold per 8 foot nominal length. An 8 foot piece of moulding will have 93" of usable length.
- Pricing P-362

© Copyright StarMark Cabinetry FEBRUARY 2022

Block 12800 Plate and Platter Moulding

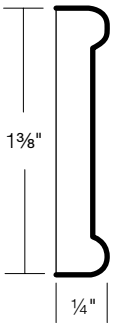

Cherry, Maple
PPL8

DESIGN CONSIDERATIONS
- Finished edges indicated by dark line
- Use Cherry for Alder and Walnut cabinetry, and Maple for Hickory and Oak cabinetry

HOW TO ORDER
- This item is sold per 8 foot nominal length. An 8 foot piece of moulding will have 93" of usable length.
- Pricing P-362

Block 12810 Egg and Dart Moulding

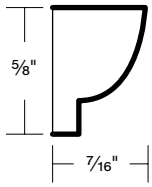

Cherry, Maple
LEGD8

DESIGN CONSIDERATIONS
- Can be used with CCM8 (Block 12270)
- Finished edges indicated by dark line
- Use Cherry for Alder and Walnut cabinetry, and Maple for Hickory and Oak cabinetry

HOW TO ORDER
- This item is sold per 8 foot nominal length. An 8 foot piece of moulding will have 93" of usable length.
- Pricing P-362

Block 12820 Small Loop De Loop Moulding

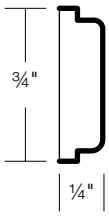

Beech, Cherry, Maple
SLOOP8

DESIGN CONSIDERATIONS
- Can be used with CCM8 (Block 12270)
- Finished edges indicated by dark line
- Use Cherry for Alder and Walnut cabinetry, and Beech for Hickory and Oak cabinetry

HOW TO ORDER
- This item is sold per 8 foot nominal length. An 8 foot piece of moulding will have 93" of usable length.
- Pricing P-362

Block 12830 Ribbon Twist Moulding

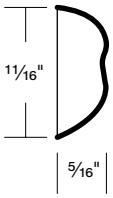

Beech, Cherry, Maple
RIB8

DESIGN CONSIDERATIONS
- Can be used with CCM8 (Block 12270)
- Finished edges indicated by dark line
- Use Cherry for Alder and Walnut cabinetry, and Beech for Hickory and Oak cabinetry

HOW TO ORDER
- This item is sold per 8 foot nominal length. An 8 foot piece of moulding will have 93" of usable length.
- Pricing P-363

Block 12840 Turned Rope Moulding

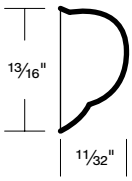

Beech, Cherry, Maple
TROPE8

DESIGN CONSIDERATIONS
- Finished edges indicated by dark line
- Use Cherry for Alder and Walnut cabinetry, and Beech for Hickory and Oak cabinetry

HOW TO ORDER
- This item is sold per 8 foot nominal length. An 8 foot piece of moulding will have 93" of usable length.
- Pricing P-363

© Copyright StarMark Cabinetry FEBRUARY 2022

Block 12850 Large Turned Rope Moulding

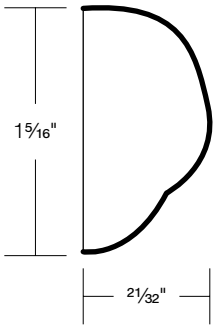

Cherry, Maple, Walnut
LTROPE8

DESIGN CONSIDERATIONS
- This moulding can be installed between two CLBBL (column block with collar) and applied to front of a panel box or filler. See block 13220 for CLBBL.
- Finished edges indicated by dark line
- Use Cherry for Alder and Walnut cabinetry, and Maple for Hickory and Oak cabinetry

HOW TO ORDER
- This item is sold per 8 foot nominal length. An 8 foot piece of moulding will have 93" of usable length.
- Pricing P-363

Block 12860 Column Reeded Moulding

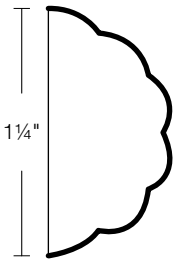

Alder, Cherry, Hickory, Maple, Oak, Walnut
CLREED8

DESIGN CONSIDERATIONS
- This moulding can be installed between two CLBBL (column block with collar) and applied to front of a panel box or filler. See block 13220 for CLBBL.
- Finished edges indicated by dark line

HOW TO ORDER
- This item is sold per 8 foot nominal length. An 8 foot piece of moulding will have 93" of usable length.
- Pricing P-363

NOTE for blocks 12200 - 12950

- To specify these items in a finish that is different from the cabinetry, please order them using a separate order form.
- Moulding plans available on OneTouch in the Product Info + Resources section.

Block 12870 Column Plain Moulding

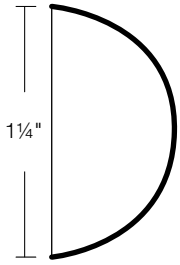

Cherry, Hickory, Maple, Oak, Walnut
CLPLN8
CLPLN10

DESIGN CONSIDERATIONS
- This moulding can be installed between two CLBBL (column block with collar) and applied to front of a panel box or filler. See block 13220 for CLBBL.
- Finished edges indicated by dark line
- Use Cherry for Alder cabinetry

HOW TO ORDER
- This item is sold per 8 foot length and 10 foot length.
- The lengths are nominal. An 8 foot piece of moulding will have 93" of usable length. A 10 foot piece of moulding will have 117" of usable length.
- Pricing P-363

Block 12880 Vine Moulding

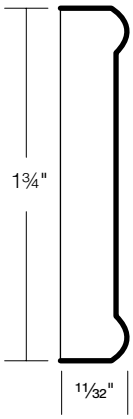

Beech, Cherry, Maple
VINE8

DESIGN CONSIDERATIONS
- Finished edges indicated by dark line
- Use Cherry for Alder and Walnut cabinetry, and Beech for Hickory and Oak cabinetry

HOW TO ORDER
- This item is sold per 8 foot nominal length. An 8 foot piece of moulding will have 93" of usable length.
- Pricing P-363

© Copyright StarMark Cabinetry FEBRUARY 2022

Block 12940 Small Flat Reeded Moulding

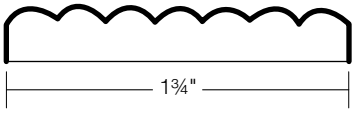

Cherry, Hickory, Maple, Oak
SREED8
SREED10

DESIGN CONSIDERATIONS

- This moulding can be installed between two square onlays or plinth blocks and applied to front of a panel box or filler.
- Finished edges indicated by dark line
- Use Cherry for Alder and Walnut cabinetry

HOW TO ORDER

- This item is sold per 8 foot length and 10 foot length.
- The lengths are nominal. An 8 foot piece of moulding will have 93" of usable length. A 10 foot piece of moulding will have 117" of usable length.
- Pricing P-363

Block 12950 Large Flat Reeded Moulding

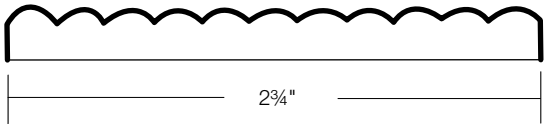

Cherry, Hickory, Maple, Oak
LREED8
LREED10

DESIGN CONSIDERATIONS

- This moulding can be installed between two square onlays or plinth blocks and applied to front of a panel box or filler.
- Finished edges indicated by dark line
- Use Cherry for Alder and Walnut cabinetry.

HOW TO ORDER

- This item is sold per 8 foot length and 10 foot length.
- The lengths are nominal. An 8 foot piece of moulding will have 93" of usable length. A 10 foot piece of moulding will have 117" of usable length.
- Pricing P-363

© Copyright StarMark Cabinetry FEBRUARY 2022

Index

Description	Nomenclature	Page
Acanthus Bracket	BRACANTIS	C-447
Acanthus Capital Onlay, Large	LACNCAP	C-445
Acanthus Capital Onlay, Small	SACNCAP	C-445
Acanthus Island Corbel	ISLCBACN	C-447
Acanthus Round Onlay, Large	LACNOL	C-445
Acanthus Round Onlay, Small	SACNOL	C-445
Acanthus Valance Onlay	ACNOL	C-445
ADIP Columns	CMADIP	C-452
Arts & Craft Corbel	ACCORB	C-448
Assembled Columns	CLM	C-451
Base Block	BBL	C-446
Bracket Feet Corners	MBKFT_C	C-453
Bracket Feet, Arched	MBKFTC	C-453
Bracket Feet, Pointed	MBKFTB	C-453
Bracket Feet, Traditional	MBKFTA	C-453
Bun Foot	BUNFT	C-449
Column Block	CLBBL	C-446
Corbel Acanthus Bracket	CTSACANTIS	C-447
Corbel Plain Bracket	CTSPLAIN	C-447
Countertop Support	CTS	C-448
French Foot	FRNFT	C-449
Furniture Skirt, Arched	MSKTC	C-454
Furniture Skirt, Pointed	MSKTB	C-453
Furniture Skirt, Traditional	MSKTA	C-453
Plain Bracket	BRPLAIN	C-446
Plain Island Corbel	ISLCBPLN	C-447
Plinth Block	PBL	C-446
Rosette Round Onlay, Large	LROSE	C-446
Rosette Round Onlay, Small	SROSE	C-446
Shell Capital Onlay, Large	LSHELL	C-445
Shell Capital Onlay, Small	SSHELL	C-445
Shell Valance Onlay	SHELLOL	C-445
Tapered Foot	TAPFT	C-449
Tapered Leg	TAPLG	C-449
Turned Post Fluted & Bun	TPOSTFB	C-451
Turned Post Fluted & Square	TPOSTFS	C-451
Turned Post Plain & Bun	TPOSTPB	C-450
Turned Post Plain & Square	TPOSTPS	C-450
Turned Post Rope & Bun	TPOSTRB	C-451
Turned Post Rope & Square	TPOSTRS	C-450
Wright Corbel, Large	BRLWRIGHT	C-448
Wright Corbel, Medium	BRMWRIGHT	C-448
Wright Corbel, Small	BRSWRIGHT	C-447
Wright Island Corbel	ISLCBWRT	C-448
Wright Post	TPOSTWT	C-450
Wright Tall Post	TPOSTWT	C-450

© Copyright StarMark Cabinetry FEBRUARY 2022

Index

Description	Nomenclature	Page	Description	Nomenclature	Page

© Copyright StarMark Cabinetry FEBRUARY 2022

NOTE for blocks 13020-13220

- See block 9180 for Onlay Attachment.

Block 13020 Acanthus Valance Onlay

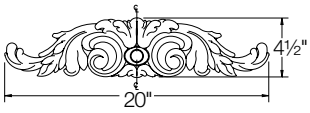

Beech, Cherry, Maple
ACNOL

DESIGN CONSIDERATIONS

20" Wide - ⅝" Thick

- Use Cherry for Alder cabinetry, and Beech for Hickory and Oak cabinetry

HOW TO ORDER

- Pricing P-365

Block 13040 Shell Valance Onlay

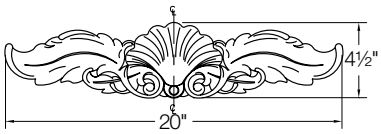

DESIGN CONSIDERATIONS

20" Wide - ⅝" Thick

- Use Cherry for Alder cabinetry, and Beech for Hickory and Oak cabinetry

HOW TO ORDER

- Pricing P-365

Beech, Cherry, Maple
SHELLOL

Block 13100 Acanthus Capital Onlay

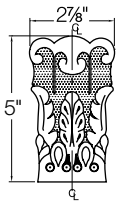

- 1 9/16" thick
Small

Beech, Cherry, Maple
SACNCAP

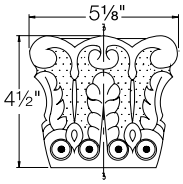

- 1 9/16" thick
Large

Beech, Cherry, Maple
LACNCAP

DESIGN CONSIDERATIONS

- Use Cherry for Alder cabinetry, and Beech for Hickory and Oak cabinetry.

HOW TO ORDER

- Pricing P-365

Block 13120 Shell Capital Onlay

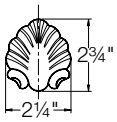

- ⅝" thick
Small

Cherry, Maple
SSHELL

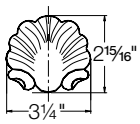

- ⅝" thick
Large

Cherry, Maple
LSHELL

DESIGN CONSIDERATIONS

- Use Cherry for Alder cabinetry, and Maple for Hickory and Oak cabinetry.

HOW TO ORDER

- Pricing P-365

Block 13180 Acanthus Round Onlay

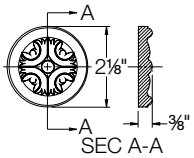

- ⅜" thick
Small

Cherry, Maple
SACNOL

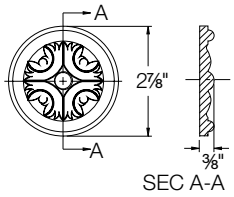

- ⅜" thick
Large

Cherry, Maple
LACNOL

DESIGN CONSIDERATIONS

- Use Cherry for Alder cabinetry, and Maple for Hickory and Oak cabinetry.

HOW TO ORDER

- Pricing P-365

© Copyright StarMark Cabinetry FEBRUARY 2022

NOTE for blocks 13010-13220

- See block 9180 for Onlay Attachment.

Block 13190 Rosette Round Onlay

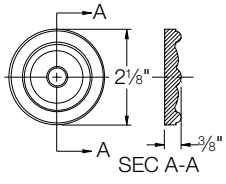

- ⅜" thick

Small

Cherry, Maple
SROSE

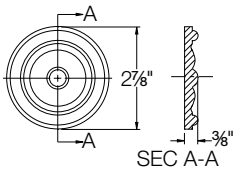

- ⅜" thick

Large

Cherry, Maple
LROSE

DESIGN CONSIDERATIONS

- Use Cherry for Alder cabinetry, and Maple for Hickory and Oak cabinetry.

HOW TO ORDER

- Pricing P-365

Block 13200 Plinth Block

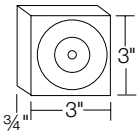

PBL

DESIGN CONSIDERATIONS

- ¾" x 3" x 3" solid wood
- Rosette is routed into plinth

HOW TO ORDER

- Pricing P-365

Block 13210 Base Block

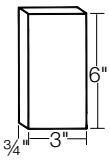

BBL

DESIGN CONSIDERATIONS

- ¾" x 3" x 6" solid wood

HOW TO ORDER

- Pricing P-365

Block 13220 Column Block

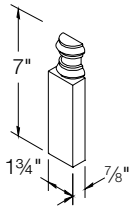

Cherry, Hickory, Maple, Oak, Walnut
CLBBL

DESIGN CONSIDERATIONS

- ¾" x 1¾" x 7"
- See blocks 12850, 12860, 12870 for coordinating mouldings
- Use Cherry for Alder cabinetry.

HOW TO ORDER

- Pricing P-365

Block 13240 Plain Bracket

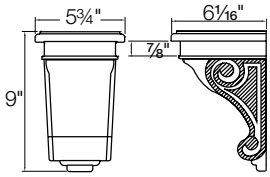

Cherry, Maple, Oak
BRPLAIN9

DESIGN CONSIDERATIONS

- Use Cherry for Alder cabinetry, and Oak for Hickory cabinetry.

HOW TO ORDER

- Pricing P-365

INSTALLATION TIP

- The corbels have screw brackets on the back.

© Copyright StarMark Cabinetry FEBRUARY 2022

Block 13241 Corbel Plain Bracket

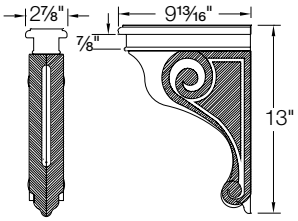

Cherry, Maple, Oak
CTSPLAIN

DESIGN CONSIDERATIONS
- Use Cherry for Alder cabinetry, and Oak for Hickory cabinetry.

HOW TO ORDER
- Pricing P-366

INSTALLATION TIP
- The corbels have screw brackets on the back.

Block 13242 Plain Island Corbel

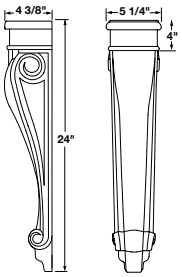

Cherry, Maple
ISLCBPLN24

DESIGN CONSIDERATIONS
- Use Cherry for Alder cabinetry, and Maple for Hickory and Oak cabinetry

HOW TO ORDER
- Pricing P-366

Block 13250 Acanthus Bracket

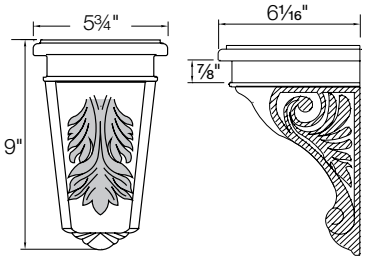

Cherry, Maple, Oak
BRACANTIS9

DESIGN CONSIDERATIONS
- Use Cherry for Alder cabinetry, and Oak for Hickory cabinetry.

HOW TO ORDER
- Pricing P-366

INSTALLATION TIP
- The corbels have screw brackets on the back.

Block 13251 Corbel Acanthus Bracket

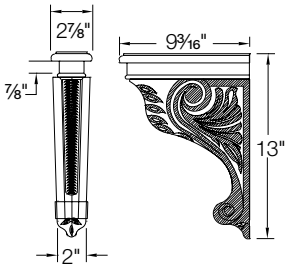

Cherry, Maple, Oak
CTSACANTIS

DESIGN CONSIDERATIONS
- Use Cherry for Alder cabinetry, and Oak for Hickory cabinetry.

HOW TO ORDER
- Pricing P-366

INSTALLATION TIP
- The corbels have screw brackets on the back.

Block 13252 Acanthus Island Corbel

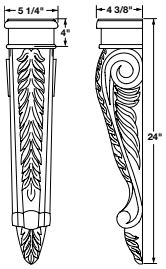

Cherry, Maple, Oak
ISLCBACN24

DESIGN CONSIDERATIONS
- Use Cherry for Alder cabinetry, and Oak for Hickory cabinetry

HOW TO ORDER
- Pricing P-366

Block 13360 Wright Corbel, Small

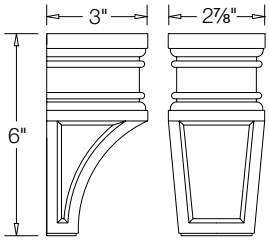

Cherry, Maple, Oak
BRSWRIGHT

DESIGN CONSIDERATIONS
- These corbels are hand carved.
- Use Cherry for Alder cabinetry, and Oak for Hickory cabinetry.

HOW TO ORDER
- Pricing P-366

INSTALLATION TIP
- The corbels have screw brackets on the back.

© Copyright StarMark Cabinetry FEBRUARY 2022

Block 13370 Wright Corbel, Medium

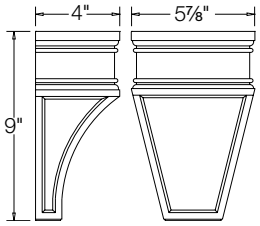

Cherry, Maple, Oak
BRMWRIGHT

DESIGN CONSIDERATIONS
- These corbels are hand carved.
- Use Cherry for Alder cabinetry, and Oak for Hickory cabinetry.

HOW TO ORDER
- Pricing P-366

INSTALLATION TIP
- The corbels have screw brackets on the back.

Block 13380 Wright Corbel, Large

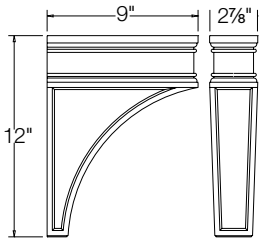

Cherry, Maple, Oak
BRLWRIGHT

DESIGN CONSIDERATIONS
- These corbels are hand carved.
- Use Cherry for Alder cabinetry, and Oak for Hickory cabinetry.

HOW TO ORDER
- Pricing P-366

INSTALLATION TIP
- The corbels have screw brackets on the back.

Block 13381 Wright Island Corbel

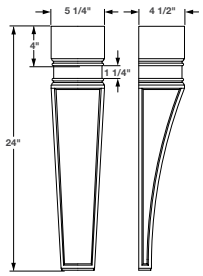

Cherry, Maple, Oak
ISLCBWRT24

DESIGN CONSIDERATIONS
- This onlay is hand carved.
- Use Cherry for Alder cabinetry, and Oak for Hickory cabinetry

HOW TO ORDER
- Pricing P-366

Block 13450 Arts & Craft Corbel

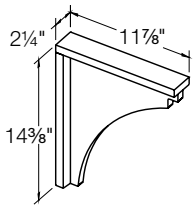

Alder, Cherry, Hickory, Maple, Oak, Quarter Sawn Oak, Walnut
ACCORB

DESIGN CONSIDERATIONS
- Solid wood
- 11⅞" deep x 14⅜" high

HOW TO ORDER
- Pricing P-366

Block 13460 Countertop Support

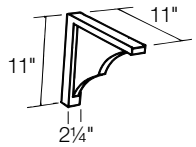

Alder, Cherry, Hickory, Maple, Oak, Walnut
CTS

DESIGN CONSIDERATIONS
- Solid wood
- Standard dimensions are 11" deep x11" high

HOW TO ORDER
- Special sizes can be requested - call Technical Assistance for quote
- Pricing P-366

© Copyright StarMark Cabinetry FEBRUARY 2022

I available in Inset cabinetry

Block 13470 Bun Foot

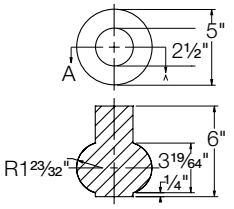

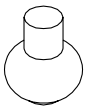

Cherry, Maple, Oak
BUNFT

DESIGN CONSIDERATIONS
6" High - 5" Diameter
- 2½" top diameter with 2 7/16" trimmable stock for standard toe space
- Use Oak for Hickory cabinetry and Cherry for Alder cabinetry

HOW TO ORDER
- Pricing P-366

INSTALLATION TIP
- We recommend notching to fit around toe kick so it sits flush with the face frame and rests on the floor

Block 13480 French Foot

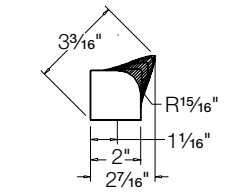

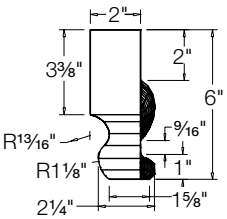

Cherry, Maple
FRNFT

DESIGN CONSIDERATIONS
6" High
- Solid wood
- 2" to trim off top
- Use Cherry for Alder cabinetry and use Maple for Oak and Hickory cabinetry

HOW TO ORDER
- Pricing P-367

INSTALLATION TIP
- We recommend notching to fit around toe kick so it sits flush with the face frame and rests on the floor

Block 13490 Tapered Foot

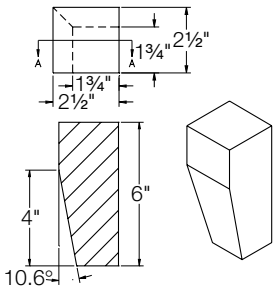

Cherry, Maple, Oak
TAPFT

DESIGN CONSIDERATIONS
6" High
- Solid wood
- 2½" X 2½" square at top with trimmable stock
- Taper on two sides only, taper installed to the inside
- Use Oak for Hickory and Quarter Sawn Oak and Use Cherry for Alder cabinetry

HOW TO ORDER
- Pricing P-367

INSTALLATION TIP
- We recommend notching to fit around toe kick so it sits flush with the face frame and rests on the floor

Block 13500 Tapered Leg

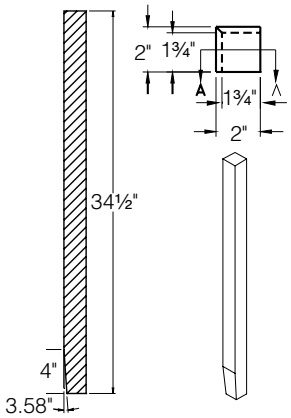

Cherry, Maple, Oak
TAPLG

DESIGN CONSIDERATIONS
34½" High
- Solid wood
- 2" X 2" square at top
- Taper starts 4" up from bottom
- Use Oak for Hickory and Quarter Sawn Oak and Use Cherry for Alder cabinetry

HOW TO ORDER
- To modify dimensions, use **ACMOD** in Block 9085. Specify dimensions in special info. Certain dimensions may require vendor approval.
- Pricing P-367

© Copyright StarMark Cabinetry FEBRUARY 2022

TURNED POST

For blocks 13530 - 13531

DESIGN CONSIDERATIONS

34½" High

- Hand carved solid wood
- Use Cherry for Alder cabinetry, and Maple for Hickory. When Oak is not available, use Maple.
- Not available with any modifications

HOW TO ORDER

- To modify dimensions, use **ACMOD** in Block 9085. Specify dimensions in special info. Certain dimensions may require vendor approval.
- Pricing P-367

Block 13530 Wright Post

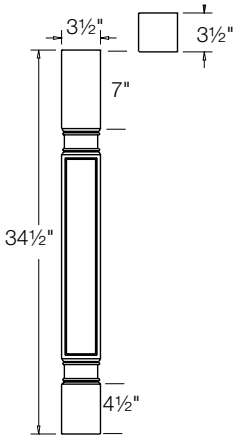

Cherry, Maple, Oak
TPOSTWT34

Block 13531 Wright Tall Post

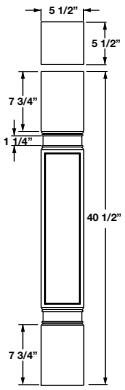

Cherry, Maple, Oak
TPOSTWT40

TURNED POST

For blocks 13570 - 13620

DESIGN CONSIDERATIONS

34½" High

- Solid wood
- 3" X 3" square top and bottom
- Turning starts 7½" down from the top and 6½" up from bottom of post
- Use Cherry for Alder cabinetry

HOW TO ORDER

- To modify dimensions, use **ACMOD** in Block 9085. Specify dimensions in special info. Certain dimensions may require vendor approval.
- Pricing P-367

Block 13570 Turned Post Plain & Square

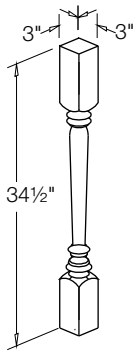

Cherry, Hickory, Maple, Oak, Walnut
TPOSTPS34
TPOSTPS.5 half turn post

Block 13580 Turned Post Plain & Bun

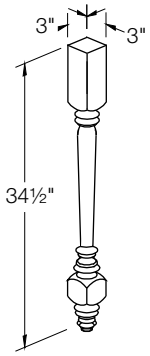

Cherry, Hickory, Maple, Oak, Walnut
TPOSTPB34

Block 13590 Turned Post Rope & Square

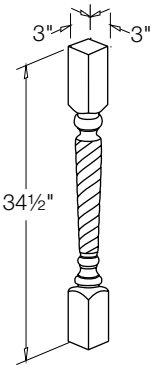

Cherry, Hickory, Maple, Oak, Walnut
TPOSTRS34
TPOSTRS.5 half turn post

© Copyright StarMark Cabinetry FEBRUARY 2022

TURNED POST

For blocks 13570 - 13620

DESIGN CONSIDERATIONS

34½" High

- Solid wood
- 3" X 3" square top and bottom
- Turning starts 7½" down from the top and 6½" up from bottom of post
- Use Cherry for Alder cabinetry

HOW TO ORDER

- To modify dimensions, use **ACMOD** in Block 9085. Specify dimensions in special info. Certain dimensions may require vendor approval.
- Pricing P-368

Block 13600 Turned Post Rope & Bun

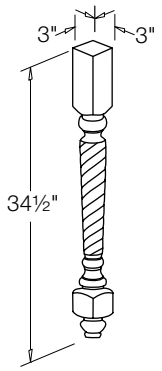

Cherry, Hickory, Maple, Oak, Walnut
TPOSTRB34

Block 13610 Turned Post Fluted & Square

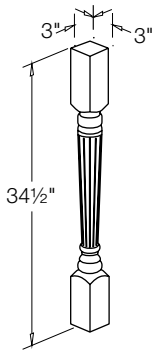

Cherry, Hickory, Maple, Oak, Walnut
TPOSTFS34
TPOSTFS.5 half turn post

Block 13620 Turned Post Fluted & Bun

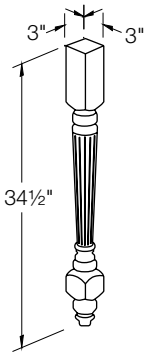

Cherry, Hickory, Maple, Oak, Walnut
TPOSTFB34

Block 13625 Assembled Columns

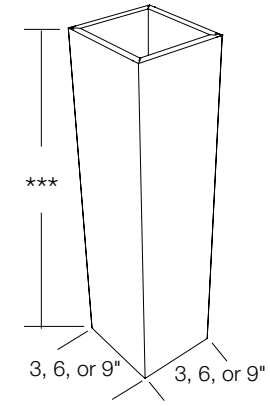

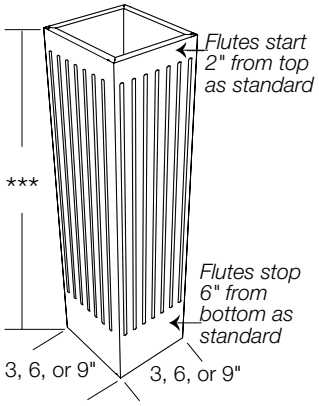

DESIGN CONSIDERATIONS

- ¾" thick solid wood sides
- Locking mitered corner joints
- Available with flutes that start 2" from top and stop 6" from bottom
- See chart for number of flutes

HOW TO ORDER

- Specify number of sides with flutes: FLUT1, FLUT2, FLUT3 or FLUT4.
- Add fluting charge (block 9140) per number of sides fluted
- Specify custom start and stop point for flutes if different than listed above.
- To modify dimensions, use **ACMOD** in Block 9085. Specify dimensions in special info.
- Pricing P-368

Width	Number of flutes
3" x 3"	3
6" x 6"	6
9" x 9"	9

3" x 3"	6" x 6"	9" x 9"
CLM3X3285	CLM6X6285	CLM9X9285
CLM3X330	CLM6X630	CLM9X930
CLM3X3315	CLM6X6315	CLM9X9315
CLM3X333	CLM6X633	CLM9X933
CLM3X3345	CLM6X6345	CLM9X9345
CLM3X336	CLM6X636	CLM9X936
CLM3X339	CLM6X639	CLM9X939
CLM3X3405	CLM6X6405	CLM9X9405
CLM3X342	CLM6X642	CLM9X942
CLM3X345	CLM6X645	CLM9X945
CLM3X348	CLM6X648	CLM9X948
CLM3X354	CLM6X654	CLM9X954
CLM3X360	CLM6X660	CLM9X960
CLM3X366	CLM6X666	CLM9X966
CLM3X372	CLM6X672	CLM9X972
CLM3X378	CLM6X678	CLM9X978
CLM3X384	CLM6X684	CLM9X984
CLM3X390	CLM6X690	CLM9X990
CLM3X396	CLM6X696	CLM9X996

© Copyright StarMark Cabinetry FEBRUARY 2022

Block 13628 ADIP Columns

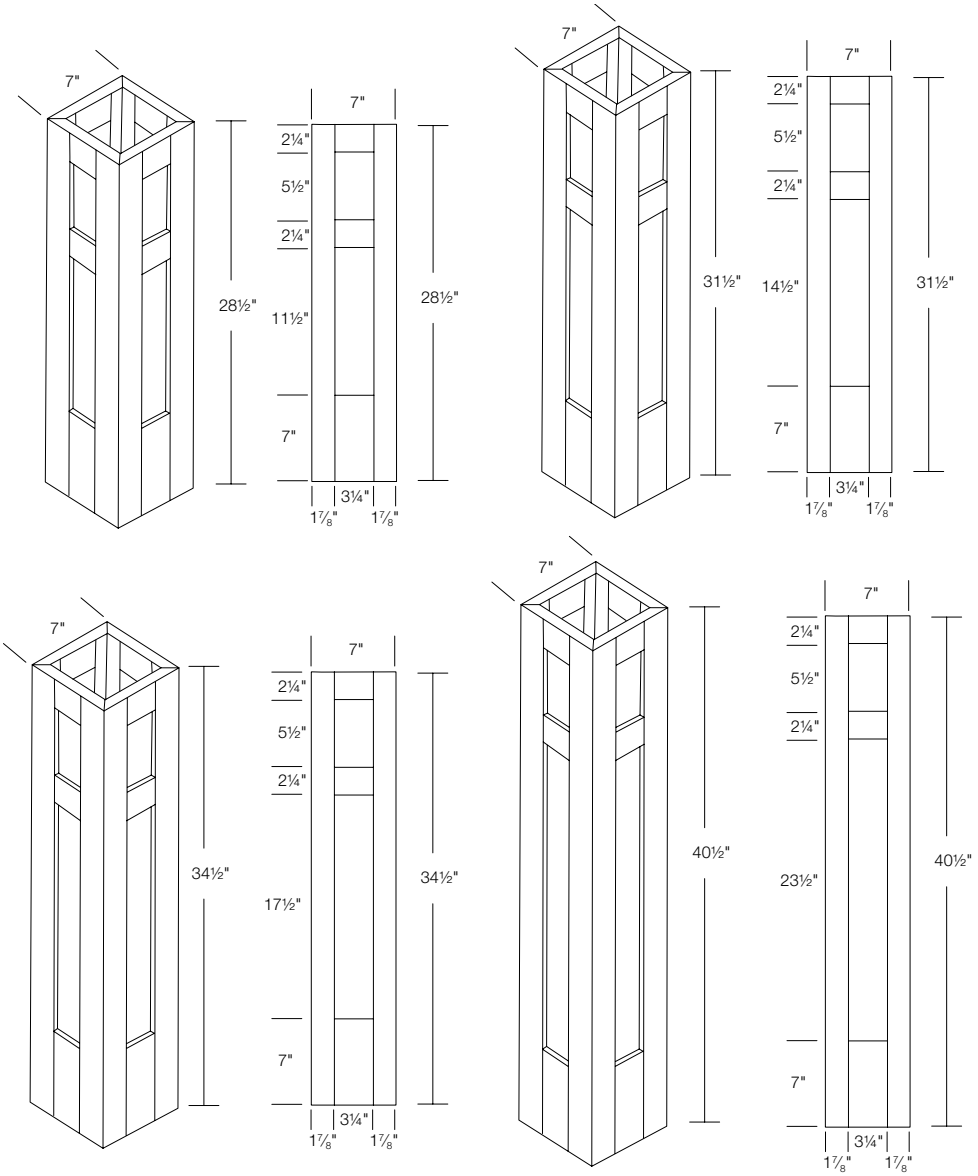

CMADIP7285
CMADIP7315
CMADIP7345
CMADIP7405

DESIGN CONSIDERATIONS

28½", 31½", 34½" or 40½"

- 7" square
- Panels on all four sides
- 1⅞" wide stiles
- No reduced depth or reduced width modifications allowed
- Center panel will coordinate with center panel of door style specified on the order.
- Upper panel area is 5½" in height. Lower panel area adjusts with overall height.
  See chart below.

HOW TO ORDER

- To modify dimensions, use **ACMOD** in Block 9085. Specify dimensions in special info.
- Pricing P-369

Cabinet Height	Upper Panel Height	Lower Panel Height
28½"	5½"	11½"
31½"	5½"	14½"
34½"	5½"	17½"
40½"	5½"	23½"

© Copyright StarMark Cabinetry FEBRUARY 2022

Bracket Feet and Corners

For blocks 13630, 13640

DESIGN CONSIDERATIONS

- Bracket feet and corners are to be used as decorative pieces installed over existing toe kick
- Brackets are ¼" taller than toe space for scribing
- Decorator Edge profile is standard

INSTALLATION TIP

- Toe kick area will need to be finished with toe trim before applying brackets

Block 13630 Bracket Feet

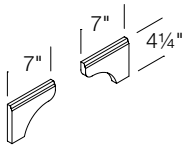

Traditional (A)

MBKFTA

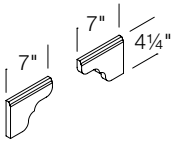

Pointed (B)

MBKFTB

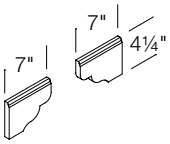

Arched (C)

MBKFTC

DESIGN CONSIDERATIONS

- Sold as pair – left and right
- See block 12630 for base moulding to bridge between brackets

HOW TO ORDER

- Pricing P-369

Block 13640 Bracket Corners

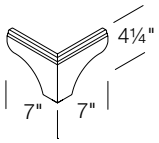

MBKFTAC

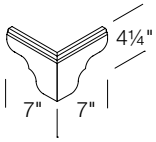

MBKFTBC

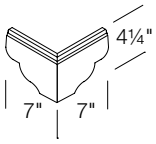

MBKFTCC

DESIGN CONSIDERATIONS

- Bracket corners are available for inside or outside corner applications
- See block 12630 for base moulding to bridge between bracket corners
- Outside application shown

HOW TO ORDER

- Suffix with an **I** for inside application or an **O** for outside application. For example, MBKFTAC-O.
- Traditional style is MBKFTAC
- Pointed style is MBKFTBC
- Arched style is MBKFTCC
- Pricing P-369

FURNITURE SKIRT

For blocks 13650, 13660, 13670

DESIGN CONSIDERATIONS

- Install a skirt over an existing toe kick area for a decorative accent.
- The skirt is shipped loose for field installation.
- The skirt is 2" longer than the nomenclature width to allow for fitting and is ¼" taller than toe space to allow for scribing.
- Decorator Edge profile is standard.
- See block 12620 for Base Return Moulding (BRM).
- See block 9260 for Base Extend Side and Stile Down (BESSD) to modify cabinet stiles. This allows a skirt to be installed on a cabinet without a toe kick notch.
- Maximum width of a skirt is 72". For wider applications, combine BM8 and bracket feet. See blocks 12630 and 13630.

HOW TO ORDER

- Specify size of skirt as a suffix to nomenclature, i.e. MSKTA28.
- If you are using a 2" decorative end panel, order a skirt from the ■ ■ column.
- If you are **NOT** using a 2" decorative end panel on either side, order a skirt from the ■ column.
- To modify dimensions, use **ACMOD** in Block 9085. Specify dimensions in special info.
- Pricing P-369

INSTALLATION TIPS

- Toe kick area will need to be finished with toe trim before applying skirt.

Block 13650 Furniture Skirt Traditional

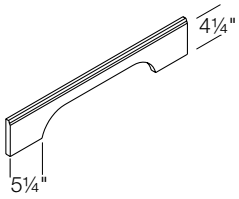

Traditional

■	■ ■
MSKTA24	**MSKTA28**
MSKTA30	**MSKTA34**
MSKTA36	**MSKTA40**
MSKTA42	**MSKTA46**
MSKTA48	**MSKTA52**
MSKTA54	**MSKTA58**
MSKTA60	**MSKTA64**
MSKTA66	**MSKTA70**

Block 13660 Furniture Skirt Pointed

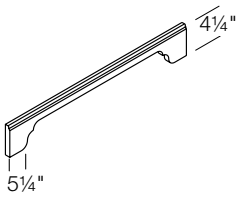

Pointed

■	■ ■
MSKTB24	**MSKTB28**
MSKTB30	**MSKTB34**
MSKTB36	**MSKTB40**
MSKTB42	**MSKTB46**
MSKTB48	**MSKTB52**
MSKTB54	**MSKTB58**
MSKTB60	**MSKTB64**
MSKTB66	**MSKTB70**

© Copyright StarMark Cabinetry FEBRUARY 2022

FURNITURE SKIRT continued I

For blocks 13650, 13660, 13670

DESIGN CONSIDERATIONS

- Install a skirt over an existing toe kick area for a decorative accent.
- The skirt is shipped loose for field installation.
- The skirt is 2" longer than the nomenclature width to allow for fitting and is ¼" taller than toe space to allow for scribing.
- Decorator Edge profile is standard.
- See block 12620 for Base Return Moulding (BRM).
- See block 9260 for Base Extend Side and Stile Down (BESSD) to modify cabinet stiles. This allows a skirt to be installed on a cabinet without a toe kick notch.
- Maximum width of a skirt is 72". For wider applications, combine BM8 and bracket feet. See blocks 12630 and 13630.

HOW TO ORDER

- Specify size of skirt as a suffix to nomenclature, i.e. MSKTA28.
- If you are using a 2" decorative end panel, order a skirt from the ■ ■ column.
- If you are **NOT** using a 2" decorative end panel on either side, order a skirt from the ■ column.
- To modify dimensions, use **ACMOD** in Block 9085. Specify dimensions in special info.
- Pricing P-369

INSTALLATION TIPS

- Toe kick area will need to be finished with toe trim before applying skirt.

Block 13670 Furniture Skirt Arched I

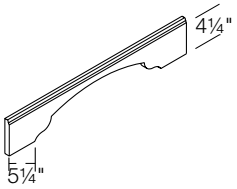

Arched

■	■ ■
MSKTC24	**MSKTC28**
MSKTC30	**MSKTC34**
MSKTC36	**MSKTC40**
MSKTC42	**MSKTC46**
MSKTC48	**MSKTC52**
MSKTC54	**MSKTC58**
MSKTC60	**MSKTC64**
MSKTC66	**MSKTC70**

© Copyright StarMark Cabinetry FEBRUARY 2022

Index

Description	Nomenclature	Page
Glacial Wood Products Block 14000		
Bun Feet	GB	C-466-467
Round Legs	GL	C-460-463
Round Post & Leg	GP/GL	C-463
Round Posts	GP	C-457-460
Square Legs	GL-SQR	C-463-464
Square Posts	GP-SQA	C-465
Square Posts – Chamfered	GP-SCF	C-465
Square Posts – Fluted	GP-SFL	C-465
Square Posts – Grooved	GP-SGR	C-465
Square Posts – Plain	GR-SPL	C-464
Brown Wood Products, Inc. Blocks 14250–14270		
Bun Feet		C-468
Round Legs		C-469
Round Post & Leg		C-470

Description	Nomenclature	Page
Art for Everyday Block 15100		
Column Base	AEBSNCT	C-527
Column Capitals	AECPL	C-527
Column Pilasters	AEPLS	C-528
Column Sub-Capitals	AESCPL	C-527
Columns	AECPL	C-528
Linea Corbels	AECBL	C-480-481
Linea Island Posts	AEISL	C-500
Modern Classic Appliques	AEAPL	C-486-487
Modern Classic Corbels	AECBL	C-476-479
Modern Classic Corner Posts	AECN	C-508-509
Modern Classic Island Posts	AEISL	C-496-498
Modern Classic Mouldings	AEMLD	C-489-492
Modern Classic Rosettes	AEROS	C-488
Modern Classic Turnings	AEPOSTNC	C-519-520
Multiplicity Legs	AELO	C-523
Multiplicity Mouldings	AEMLD	C-493-494
New Art Bases	AECORFT	C-513
New Art Corbels	AECBL	C-479-480
New Art Corner Posts	AECN	C-510-512
New Art Island Posts	AEISL	C-499-500
New Art Italianate Posts	AEPOSIT	C-521
New Art Legs	AELEG	C-520-521
New Art Mouldings	AEMLD	C-493
New York Corbels	AECBL	C-481
New York Corner Posts	AECRNNY	C-512-513
New York Island Posts	AEISL	C-500
New York Mouldings	AEMLD	C-494
New York Posts	AEPOSTN	C-524-525
Traditional Art Appliques	AEAPL	C-482-485
Traditional Art Bun Feet	AEBUN	C-529-530
Traditional Art Capitals	AECPL	C-525
Traditional Art Corbels	AECBL	C-471-476
Traditional Art Corner Posts	AECN/AECRN	C-503-507
Traditional Art Island Posts	AEISL	C-495-496
Traditional Art Legs	AELEG/AEPOS	C-514-515
Traditional Art Mantels	AEMTL	C-501-502
Traditional Art Mouldings	AEMLD	C-489
Traditional Art Queen Ann Legs	AEQ	C-507-508
Traditional Art Rosettes	AEROS	C-485
Traditional Art Spools & Half Rounds	AESPL/ AEBSPL/ AEHBR	C-530-532
Traditional Art Turnings	AEPOST	C-515-518
Traditional Art Vanity Skirts	AEVAN	C-529

© Copyright StarMark Cabinetry FEBRUARY 2022

Decorative Accent Partners

© Copyright StarMark Cabinetry FEBRUARY 2022

Block 14000 Posts, Legs & Bun Feet from Glacial Wood Products

PLAIN ROPES FLUTS REEDS TWIST WAVE RIBBON

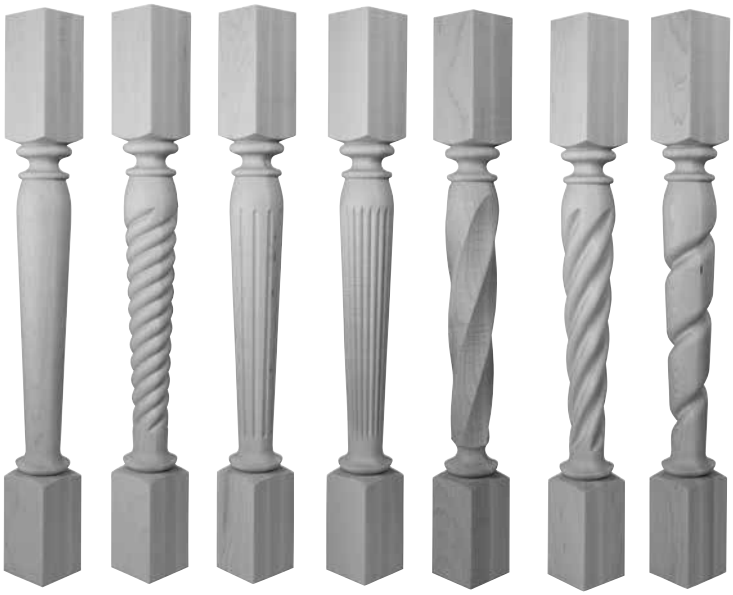

NOTCH QUTRD SPLIT NO CUT

Cut Options

GLACIAL WOOD products inc.

DESIGN CONSIDERATIONS

Alder, Cherry, Hickory, Maple, Oak, Walnut

- Posts have a square bottom and their nomenclature begins with GP. Legs have a table leg-like bottom and their nomenclature begins with GL.
- Posts, legs and bun feet are solid wood.
- GL42334, GL42534, GL45334, GL45534 are only available with PLAIN or FLUTS options.

HOW TO ORDER

- Specify a **Detail Option**: ROPES, FLUTS, REEDS, TWIST, RIBON or WAVE. Use **ACMOD** in Block 9085.
- Specify a **Cut Option**: NOTCH, QUTRD or SPLIT. All four quarters or both halves will be sent with the order when these options are specified. Use **ACMOD** in Block 9085.
- Legs & posts will be sent plain & no cut unless otherwise specified.
- No Detail or Cut Options are available on Square Legs.
- To modify dimensions, use **ACMOD** in Block 9085. Specify dimensions in special info. Certain dimensions may require vendor approval.
- There is an extended lead time for Glacial Wood Products decorative accents.
- Pricing P-373-379
- Detail Pricing P-377

Block 14000 Round Posts

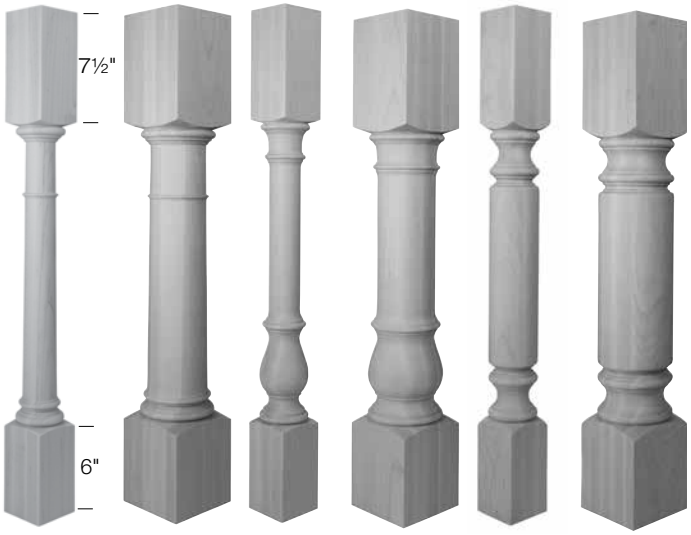

GP60334	GP60534	GP61334	GP61534	GP62334	GP62534
3½" X 34½"	5½" X 34½"	3½" X 34½"	5½" X 34½"	3½" X 34½"	5½" X 34½"

Block 14000 Round Posts

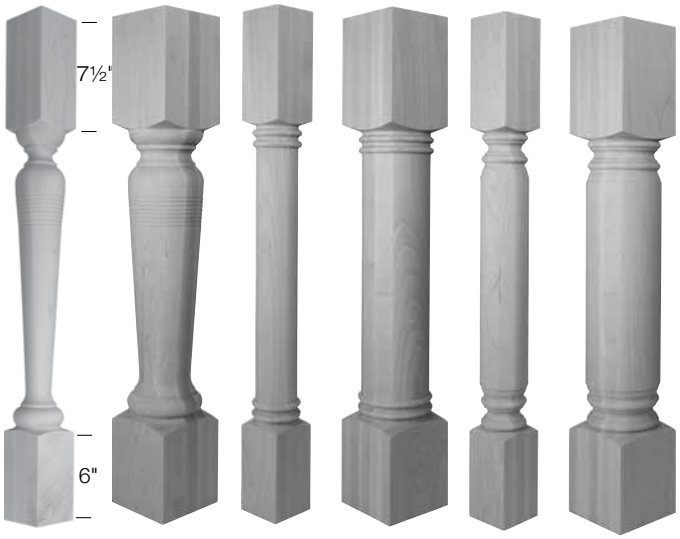

GP63334	GP63534	GP64334	GP64534	GP65334	GP65534
3½" X 34½"	5½" X 34½"	3½" X 34½"	5½" X 34½"	3½" X 34½"	5½" X 34½"

© Copyright StarMark Cabinetry FEBRUARY 2022

Block 14000 Posts, Legs & Bun Feet from Glacial Wood Products

PLAIN ROPES FLUTS REEDS TWIST WAVE RIBBON

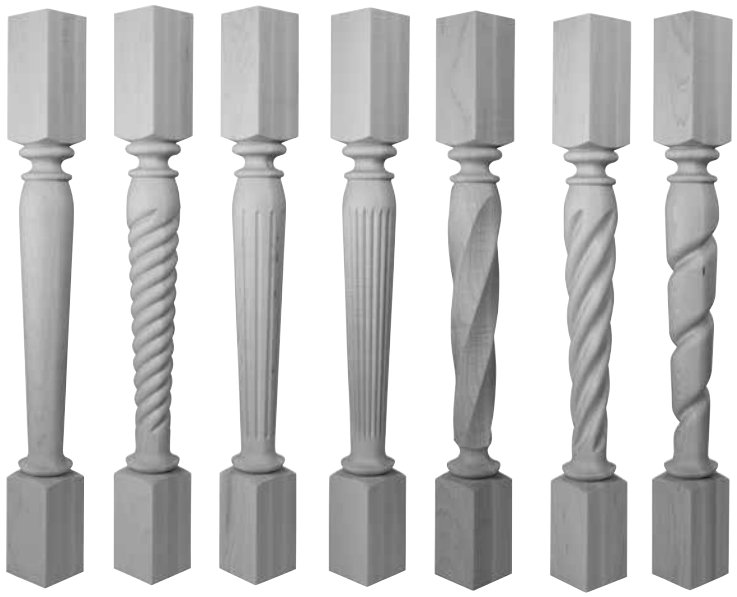

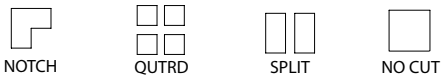

Cut Options

DESIGN CONSIDERATIONS

Alder, Cherry, Hickory, Maple, Oak, Walnut

- Posts have a square bottom and their nomenclature begins with GP. Legs have a table leg-like bottom and their nomenclature begins with GL.
- Posts, legs and bun feet are solid wood.
- GL42334, GL42534, GL45334, GL45534 are only available with PLAIN or FLUTS options.

HOW TO ORDER

- Specify a **Detail Option**: ROPES, FLUTS, REEDS, TWIST, RIBON or WAVE. Use **ACMOD** in Block 9085.
- Specify a **Cut Option**: NOTCH, QUTRD or SPLIT. All four quarters or both halves will be sent with the order when these options are specified. Use **ACMOD** in Block 9085.
- Legs & posts will be sent plain & no cut unless otherwise specified.
- No Detail or Cut Options are available on Square Legs.
- To modify dimensions, use **ACMOD** in Block 9085. Specify dimensions in special info. Certain dimensions may require vendor approval.
- There is an extended lead time for Glacial Wood Products decorative accents.
- Pricing P-373-379
- Detail Pricing P-377

GLACIAL WOOD products inc.

Block 14000 Round Posts continued

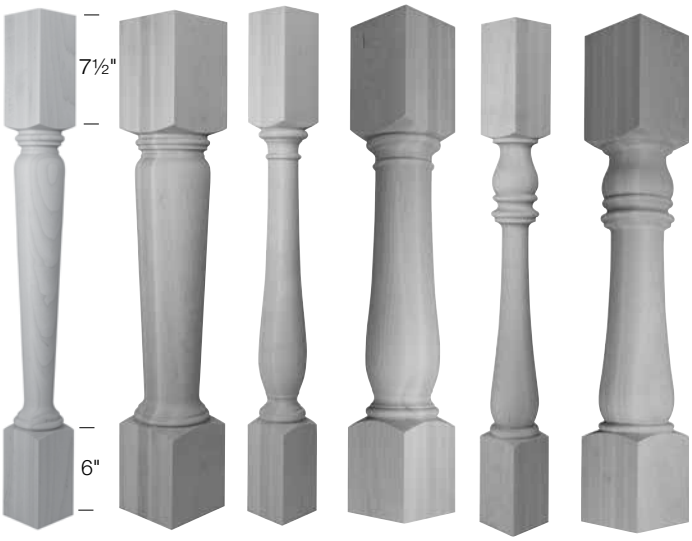

GP66334	GP66534	GP67334	GP67534	GP68334	GP68534
3½" X 34½"	5½" X 34½"	3½" X 34½"	5½" X 34½"	3½" X 34½"	5½" X 34½"

Block 14000 Round Posts continued

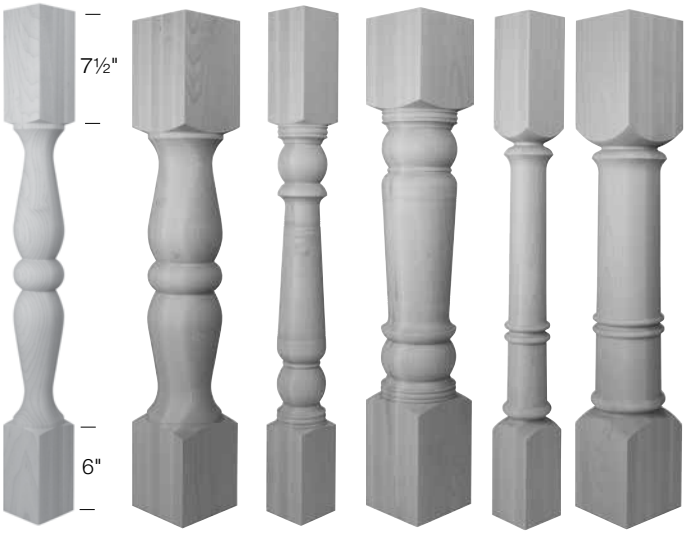

GP69334	GP69534	GP70334	GP70534	GP71334	GP71534
3½" X 34½"	5½" X 34½"	3½" X 34½"	5½" X 34½"	3½" X 34½"	5½" X 34½"

© Copyright StarMark Cabinetry FEBRUARY 2022

Block 14000 Round Posts continued

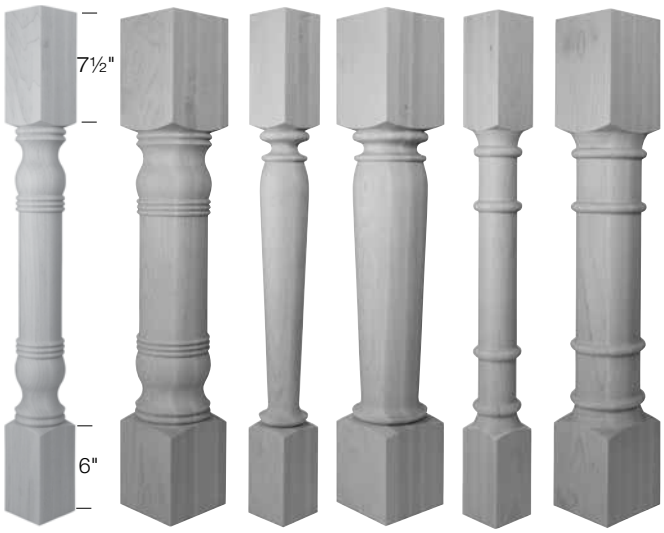

GP72334 3½" X 34½" **GP72534** 5½" X 34½" **GP73334** 3½" X 34½" **GP73534** 5½" X 34½" **GP74334** 3½" X 34½" **GP74534** 5½" X 34½"

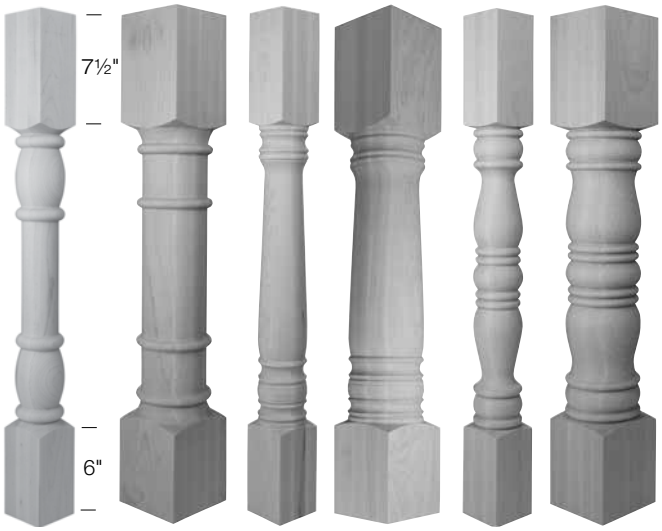

GP75334 3½" X 34½" **GP75534** 5½" X 34½" **GP76334** 3½" X 34½" **GP76534** 5½" X 34½" **GP77334** 3½" X 34½" **GP77534** 5½" X 34½"

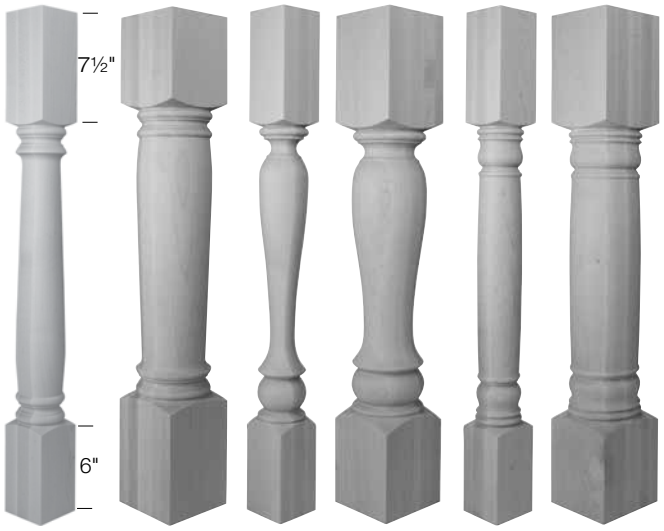

GP78334 3½" X 34½" **GP78534** 5½" X 34½" **GP79334** 3½" X 34½" **GP79534** 5½" X 34½" **GP80334** 3½" X 34½" **GP80534** 5½" X 34½"

Block 14000 Round Posts continued

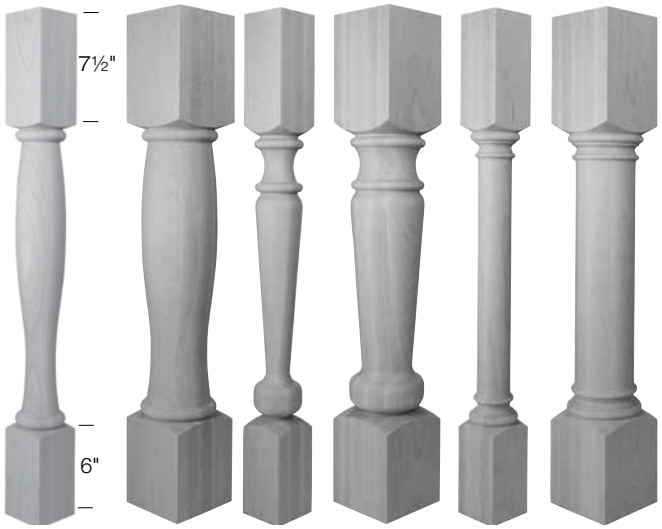

GP81334 3½" X 34½" **GP81534** 5½" X 34½" **GP82334** 3½" X 34½" **GP82534** 5½" X 34½" **GP83334** 3½" X 34½" **GP83534** 5½" X 34½"

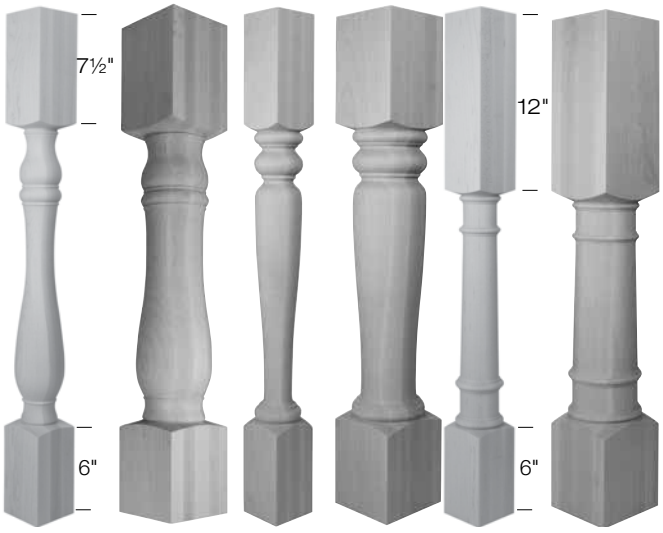

GP84334 3½" X 34½" **GP84534** 5½" X 34½" **GP85334** 3½" X 34½" **GP85534** 5½" X 34½" **GP86334** 3½" X 34½" **GP86534** 5½" X 34½"

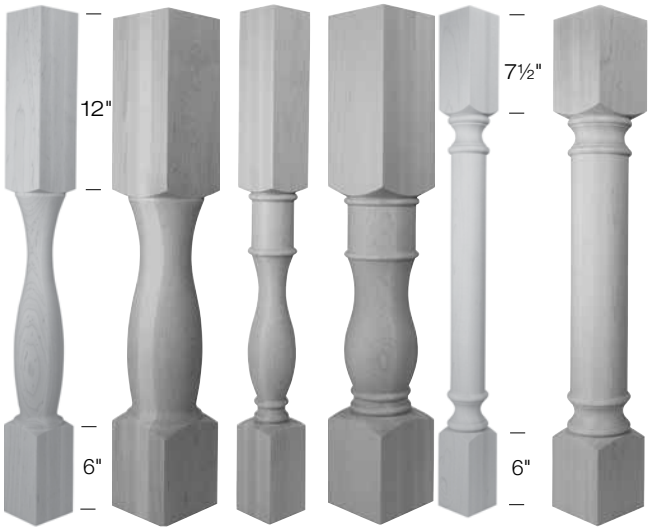

GP87334 3½" X 34½" **GP87534** 5½" X 34½" **GP88334** 3½" X 34½" **GP88534** 5½" X 34½" **GP89340** 3½" X 40½" **GP89540** 5½" X 40½"

© Copyright StarMark Cabinetry FEBRUARY 2022

Block 14000 Round Posts continued I

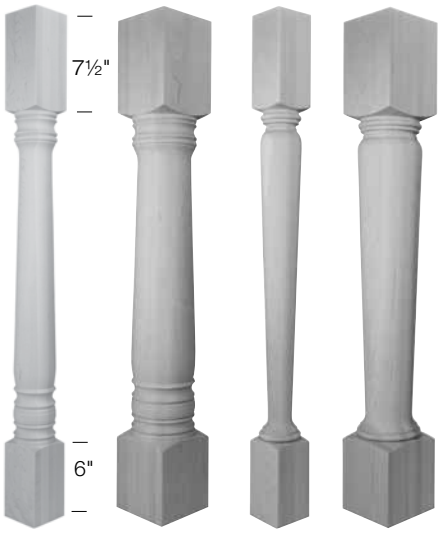

GP90340 3½" X 40½"
GP90540 5½" X 40½"
GP91340 3½" X 40½"
GP91540 5½" X 40½"

Block 14000 Round Legs I

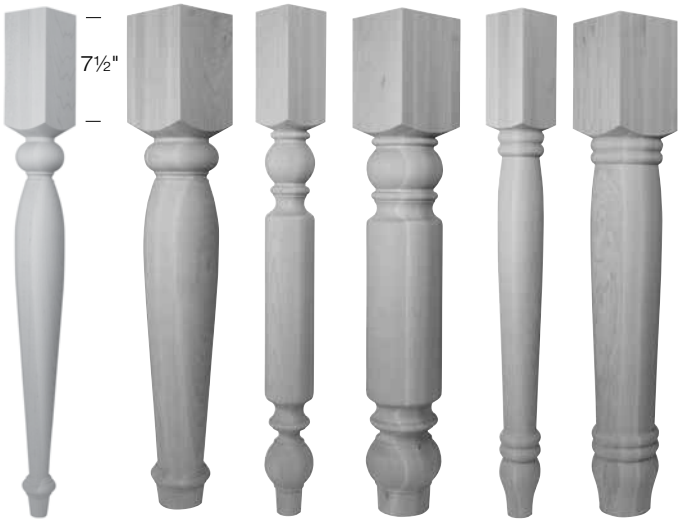

GL10334 3½" X 34½"
GL10534 5½" X 34½"
GL11334 3½" X 34½"
GL11534 5½" X 34½"
GL12334 3½" X 34½"
GL12534 5½" X 34½"

Block 14000 Round Legs I

GL13334 3½" X 34½"
GL13534 5½" X 34½"
GL14334 3½" X 34½"
GL14534 5½" X 34½"
GL15334 3½" X 34½"
GL15534 5½" X 34½"

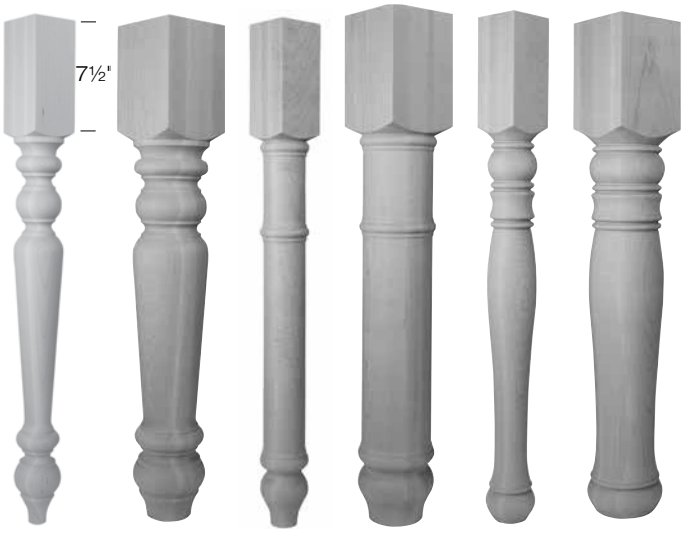

GL16334 3½" X 34½"
GL16534 5½" X 34½"
GL17334 3½" X 34½"
GL17534 5½" X 34½"
GL18334 3½" X 34½"
GL18534 5½" X 34½"

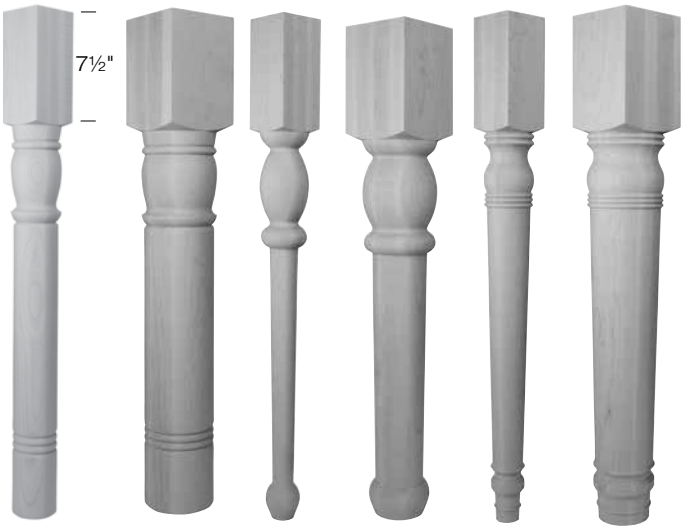

GL19334 3½" X 34½"
GL19534 5½" X 34½"
GL20334 3½" X 34½"
GL20534 5½" X 34½"
GL21334 3½" X 34½"
GL21534 5½" X 34½"

© Copyright StarMark Cabinetry FEBRUARY 2022

Block 14000 Round Legs continued I

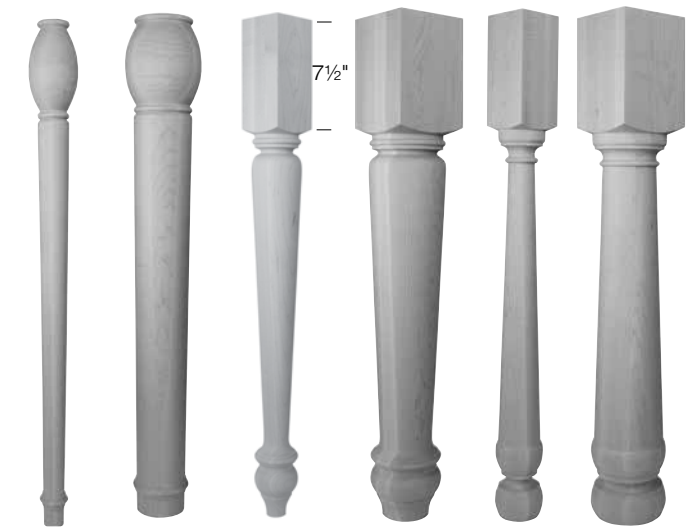

GL22334 3½" X 34½" **GL22534** 5½" X 34½" **GL23334** 3½" X 34½" **GL23534** 5½" X 34½" **GL24334** 3½" X 34½" **GL24534** 5½" X 34½"

GL25334 3½" X 34½" **GL25534** 5½" X 34½" **GL26334** 3½" X 34½" **GL26534** 5½" X 34½" **GL27334** 3½" X 34½" **GL27534** 5½" X 34½"

GL28334 3½" X 34½" **GL28534** 5½" X 34½" **GL29334** 3½" X 34½" **GL29534** 5½" X 34½" **GL30334** 3½" X 34½" **GL30534** 5½" X 34½"

Block 14000 Round Legs continued I

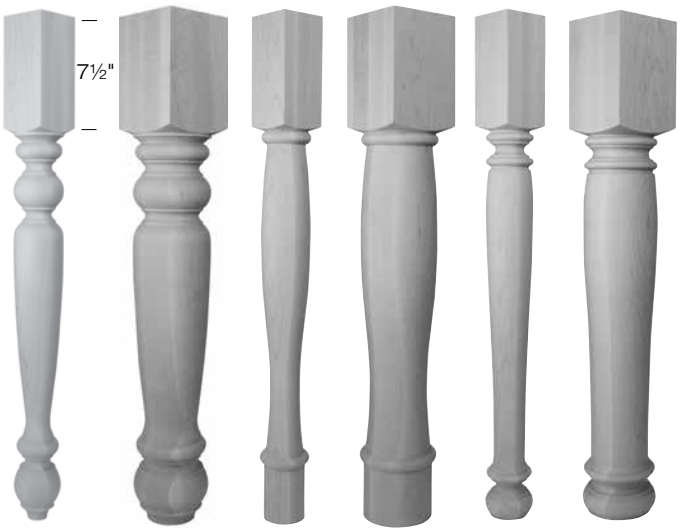

GL31334 3½" X 34½" **GL31534** 5½" X 34½" **GL32334** 3½" X 34½" **GL32534** 5½" X 34½" **GL33334** 3½" X 34½" **GL33534** 5½" X 34½"

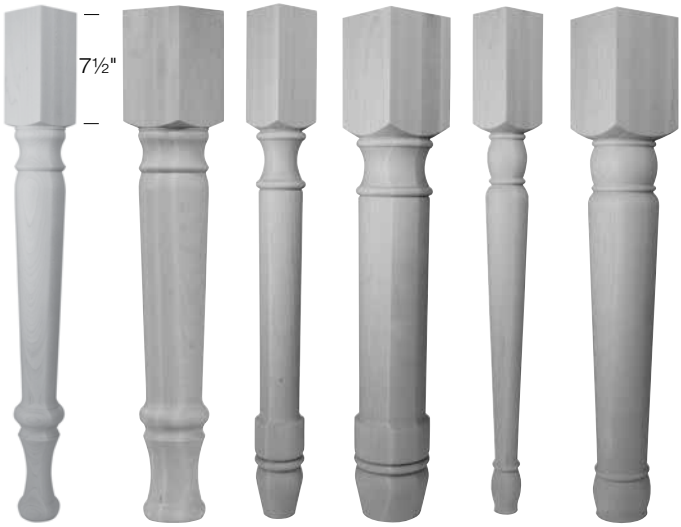

GL34334 3½" X 34½" **GL34534** 5½" X 34½" **GL35334** 3½" X 34½" **GL35534** 5½" X 34½" **GL36334** 3½" X 34½" **GL36534** 5½" X 34½"

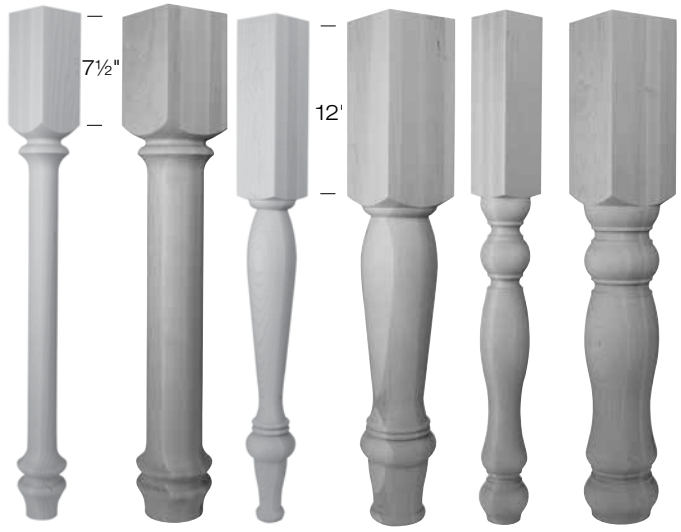

GL37334 3½" X 34½" **GL37534** 5½" X 34½" **GL38334** 3½" X 34½" **GL38534** 5½" X 34½" **GL39334** 3½" X 34½" **GL39534** 5½" X 34½"

© Copyright StarMark Cabinetry **FEBRUARY 2022**

Block 14000 Round Legs continued I

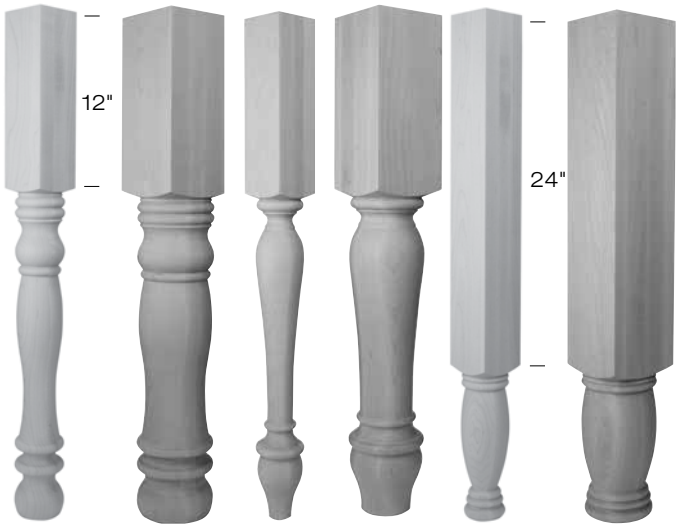

GL40334 GL40534 GL41334 GL41534 GL42334* GL42534*
3½" X 34½" 5½" X 34½" 3½" X 34½" 5½" X 34½" 3½" X 34½" 5½" X 34½"

* only FLUTS OR PLAIN

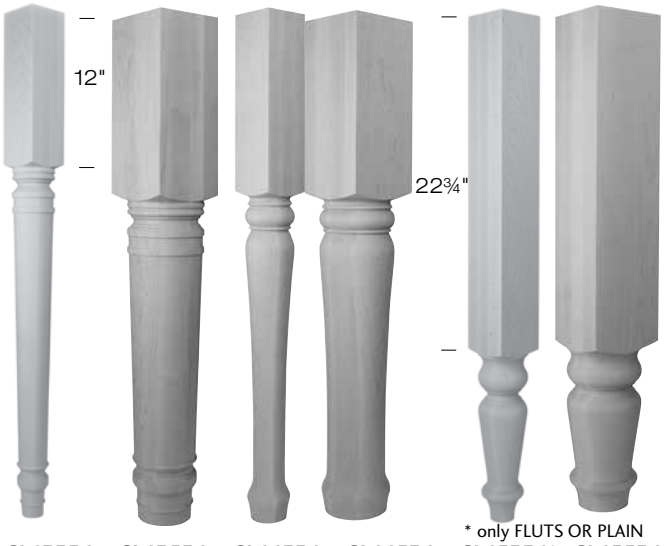

* only FLUTS OR PLAIN

GL43334 GL43534 GL44334 GL44534 GL45334* GL45534*
3½" X 34½" 5½" X 34½" 3½" X 34½" 5½" X 34½" 3½" X 34½" 5½" X 34½"

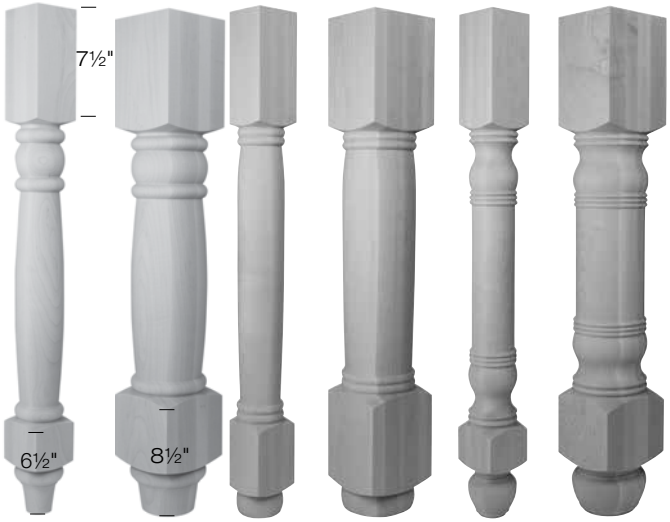

GL46334 GL46534 GL47334 GL47534 GL48334 GL48534
3½" X 34½" 5½" X 34½" 3½" X 34½" 5½" X 34½" 3½" X 34½" 5½" X 34½"

Block 14000 Round Legs continued I

GL49334 GL49534 GL50334 GL50534 GL51334 GL51534
3½" X 34½" 5½" X 34½" 3½" X 34½" 5½" X 34½" 3½" X 34½" 5½" X 34½"

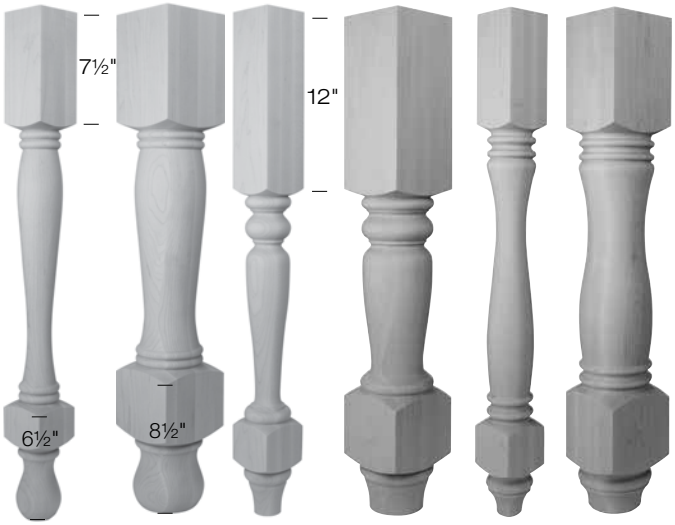

GL52334 GL52534 GL53334 GL53534 GL54334 GL54534
3½" X 34½" 5½" X 34½" 3½" X 34½" 5½" X 34½" 3½" X 34½" 5½" X 34½"

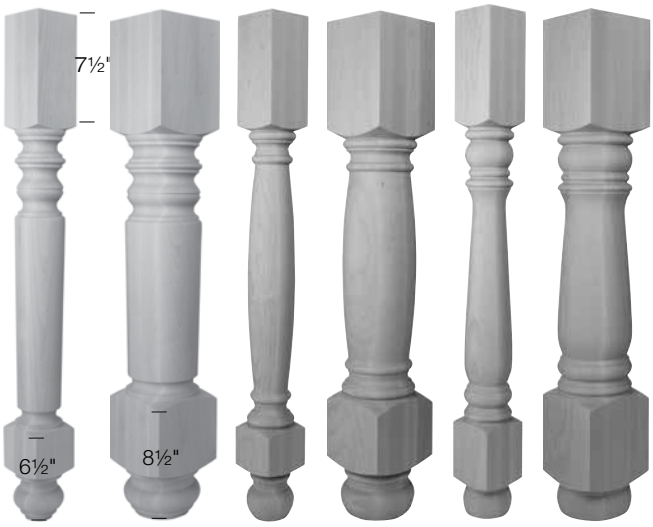

GL55334 GL55534 GL56334 GL56534 GL57334 GL57534
3½" X 34½" 5½" X 34½" 3½" X 34½" 5½" X 34½" 3½" X 34½" 5½" X 34½"

© Copyright StarMark Cabinetry FEBRUARY 2022

I available in Inset cabinetry

Block 14000 Round Legs continued I

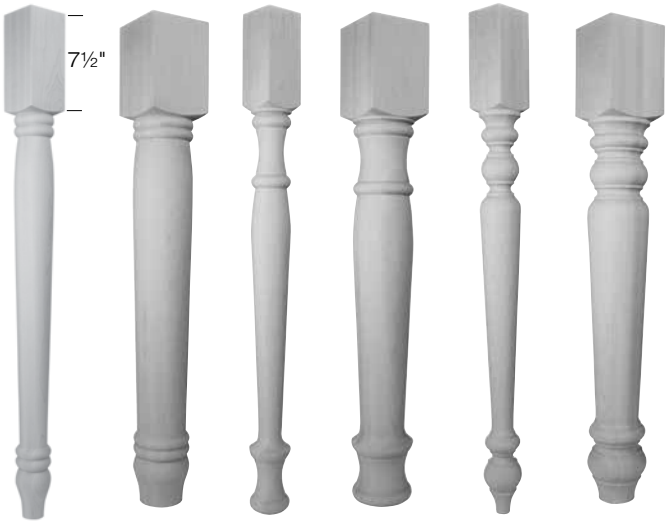

GL12340 3½" X 40½" **GL12540** 5½" X 40½" **GL14340** 3½" X 40½" **GL14540** 5½" X 40½" **GL16340** 3½" X 40½" **GL16540** 5½" X 40½"

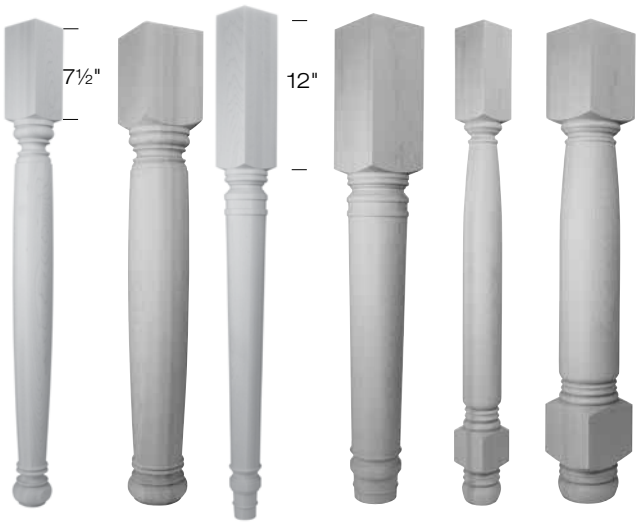

GL26340 3½" X 40½" **GL26540** 5½" X 40½" **GL43340** 3½" X 40½" **GL43540** 5½" X 40½" **GL51340** 3½" X 40½" **GL51540** 5½" X 40½"

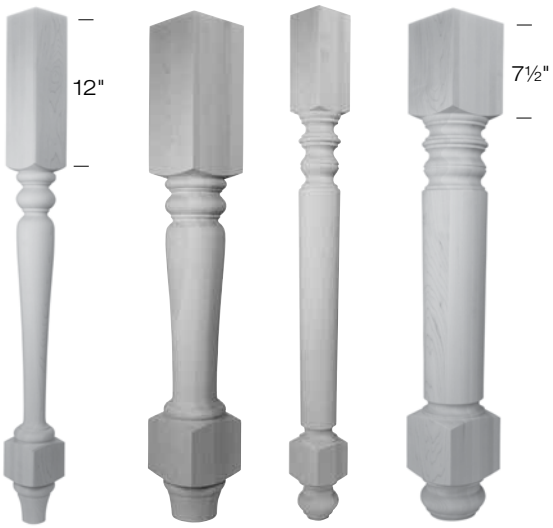

GL53340 3½" X 40½" **GL53540** 5½" X 40½" **GL55340** 3½" X 40½" **GL55540** 5½" X 40½"

Block 14000 Round Post & Leg I

GP99534 5½" X 34½" **GL99534** 5½" X 34½"

DESIGN CONSIDERATIONS

- GP99534 & GL99534 are designed to coordinate with posts and legs found in blocks 13570-13620.

HOW TO ORDER

- There is an extended lead time for Glacial Wood Products decorative accents.
- To modify dimensions, use **ACMOD** in Block 9085. Specify dimensions in special info. Certain dimensions may require vendor approval.
- Pricing P-376

Block 14000 Square Legs I

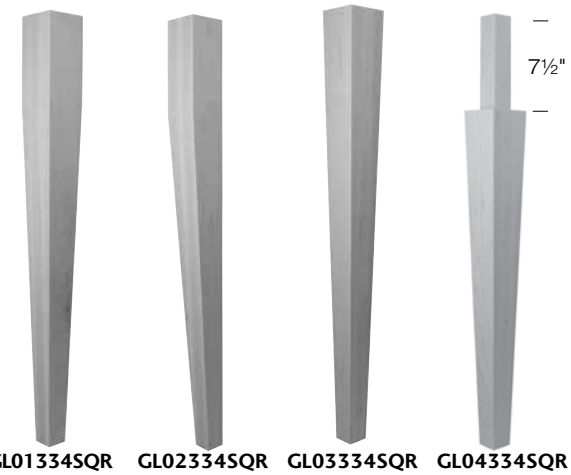

GL01334SQR 3½" X 34½" **GL02334SQR** 3½" X 34½" **GL03334SQR** 3½" X 34½" **GL04334SQR** 3½" X 34½"

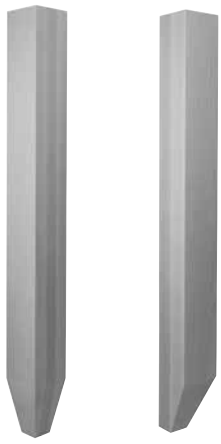

GL05334SQR 3½" X 34½" **GL06334SQR** 3½" X 34½"

DESIGN CONSIDERATIONS

- There are no detail or cut options available for these six legs.

HOW TO ORDER

- There is an extended lead time for Glacial Wood Products decorative accents.
- To modify dimensions, use **ACMOD** in Block 9085. Specify dimensions in special info. Certain dimensions may require vendor approval.
- Pricing P-377

© Copyright StarMark Cabinetry FEBRUARY 2022

Block 14000 Square Legs

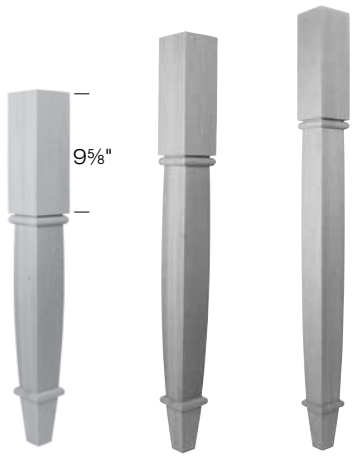

GL07328SQA 3½" X 28½"
GL07334SQA 3½" X 34½"
GL07340SQA 3½" X 40½"

Alder, Cherry, Maple, Oak, Walnut

DESIGN CONSIDERATIONS
28½", 34½", 40½" High
- Solid wood
- Use Maple for Hickory cabinetry
- Legs have a table leg-like bottom
- Available with notch or split option. Additional charges apply.

HOW TO ORDER
- There is an extended lead time for Glacial Wood Products decorative accents.
- To modify dimensions, use **ACMOD** in Block 9085. Specify dimensions in special info. Certain dimensions may require vendor approval.
- Pricing P-377
- Detail Pricing P-377

Block 14000 Square Legs

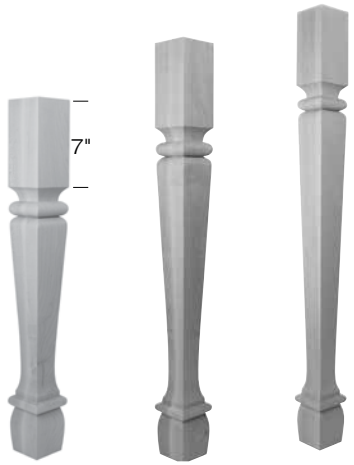

GL09328SQC 3½" X 28½"
GL09334SQC 3½" X 34½"
GL09340SQC 3½" X 40½"

Alder, Cherry, Maple, Oak, Walnut

DESIGN CONSIDERATIONS
28½", 34½", 40½" High
- Solid wood
- Use Maple for Hickory cabinetry
- Legs have a table leg-like bottom
- Available with notch or split option. Additional charges apply.

HOW TO ORDER
- There is an extended lead time for Glacial Wood Products decorative accents.
- To modify dimensions, use **ACMOD** in Block 9085. Specify dimensions in special info. Certain dimensions may require vendor approval.
- Pricing P-379
- Detail Pricing P-379

Block 14000 Square Legs

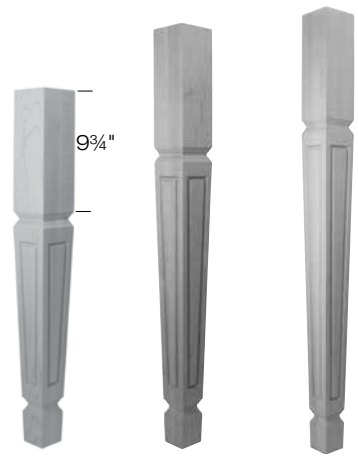

GL08328SQB 3½" X 28½"
GL08334SQB 3½" X 34½"
GL08340SQB 3½" X 40½"

Alder, Cherry, Maple, Oak, Walnut

DESIGN CONSIDERATIONS
28½", 34½", 40½" High
- Solid wood
- Use Maple for Hickory cabinetry
- Legs have a table leg-like bottom
- Available with notch or split option. Additional charges apply.

HOW TO ORDER
- There is an extended lead time for Glacial Wood Products decorative accents.
- To modify dimensions, use **ACMOD** in Block 9085. Specify dimensions in special info. Certain dimensions may require vendor approval.
- Pricing P-377
- Detail Pricing P-377

Block 14000 Square Posts - Plain

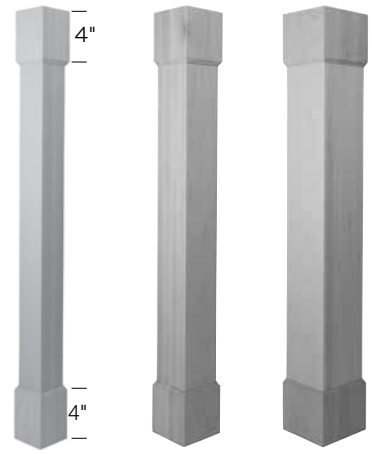

GP01334SPL 3" X 34½"
GP01434SPL 4" X 34½"
GP01534SPL 5" X 34½"

Alder, Cherry, Maple, Oak, Walnut

DESIGN CONSIDERATIONS
34½" High
- Solid wood
- Use Maple for Hickory cabinetry
- 3", 4", and 5" widths
- Available with notch or split option. Additional charges apply.

HOW TO ORDER
- There is an extended lead time for Glacial Wood Products decorative accents.
- To modify dimensions, use **ACMOD** in Block 9085. Specify dimensions in special info. Certain dimensions may require vendor approval.
- Pricing P-377
- Detail Pricing P-377

© Copyright StarMark Cabinetry FEBRUARY 2022

Block 14000 Square Posts - Grooved

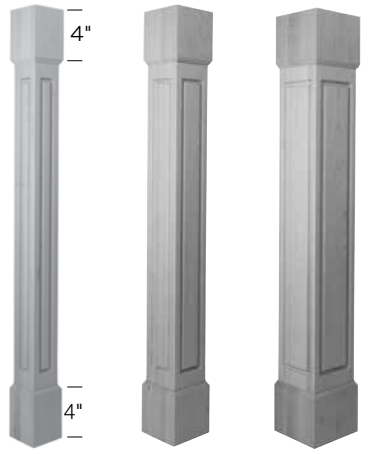

GP01334SGR 3" X 34½"
GP01434SGR 4" X 34½"
GP01534SGR 5" X 34½"

Alder, Cherry, Maple, Oak, Walnut

DESIGN CONSIDERATIONS

34½" High

- Solid wood
- Use Maple for Hickory cabinetry
- 3", 4", and 5" widths
- Available with notch or split option. Additional charges apply.

HOW TO ORDER

- There is an extended lead time for Glacial Wood Products decorative accents.
- To modify dimensions, use **ACMOD** in Block 9085. Specify dimensions in special info. Certain dimensions may require vendor approval.
- Pricing P-377
- Detail Pricing P-377

Block 14000 Square Posts - Fluted

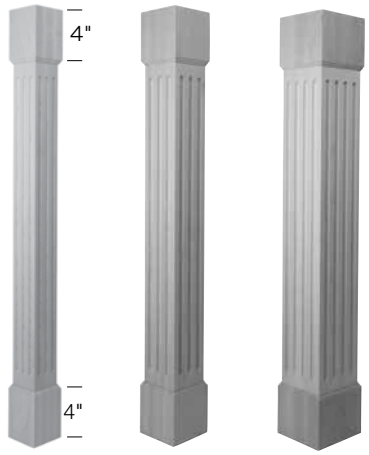

GP01334SFL 3" X 34½"
GP01434SFL 4" X 34½"
GP01534SFL 5" X 34½"

Alder, Cherry, Maple, Oak, Walnut

DESIGN CONSIDERATIONS

34½" High

- Solid wood
- Use Maple for Hickory cabinetry
- 3", 4", and 5" widths
- Available with notch or split option. Additional charges apply.

HOW TO ORDER

- There is an extended lead time for Glacial Wood Products decorative accents.
- To modify dimensions, use **ACMOD** in Block 9085. Specify dimensions in special info. Certain dimensions may require vendor approval.
- Pricing P-378
- Detail Pricing P-378

Block 14000 Square Posts - Chamfered

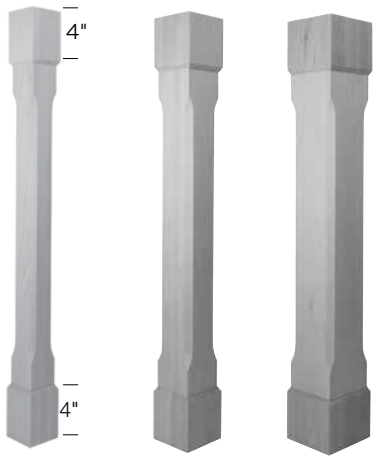

GP01334SCF 3" X 34½"
GP01434SCF 4" X 34½"
GP01534SCF 5" X 34½"

Alder, Cherry, Maple, Oak, Walnut

DESIGN CONSIDERATIONS

34½" High

- Solid wood
- Use Maple for Hickory cabinetry
- 3", 4", and 5" widths
- Available with notch or split option. Additional charges apply.

HOW TO ORDER

- There is an extended lead time for Glacial Wood Products decorative accents.
- To modify dimensions, use **ACMOD** in Block 9085. Specify dimensions in special info. Certain dimensions may require vendor approval.
- Pricing P-378
- Detail Pricing P-377

Block 14000 Square Posts

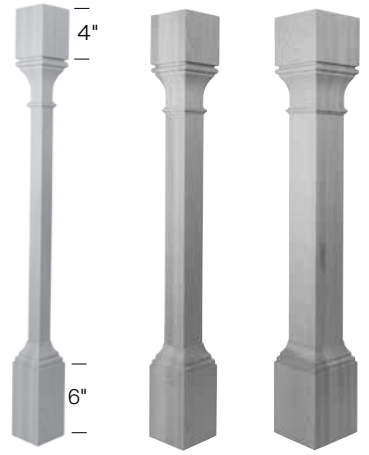

GP02334SQA 3" X 34½"
GP02434SQA 4" X 34½"
GP02534SQA 5" X 34½"

Alder, Cherry, Maple, Oak, Walnut

DESIGN CONSIDERATIONS

34½" High

- Solid wood
- Use Maple for Hickory cabinetry
- 3", 4", and 5" widths
- Available with notch or split option. Additional charges apply.

HOW TO ORDER

- There is an extended lead time for Glacial Wood Products decorative accents.
- To modify dimensions, use **ACMOD** in Block 9085. Specify dimensions in special info. Certain dimensions may require vendor approval.
- Pricing P-378
- Detail Pricing P-377

© Copyright StarMark Cabinetry FEBRUARY 2022

Block 14000 Bun Feet

DESIGN CONSIDERATIONS

Alder, Cherry, Hickory, Maple, Oak, Walnut

- Solid wood
- Bun Feet are 4½" in height
- All bun feet are round
- First two digits in bun foot nomenclature are the design number and the last two digits are the diameter
- See block 8195 for Vanity Platform

HOW TO ORDER

- There is an extended lead time for Glacial Wood Products decorative accents.
- Pricing P-378-379

Block 14000 Bun Feet 2½" Diameter

GB0125

GB0225

GB0325

GB0425

GB0525

GB0625

GB0725

GB0825

GB0925

GB1025

GB1125

Block 14000 Bun Feet 3½" Diameter

GB1535

GB1635

GB1735

GB1835

Block 14000 Bun Feet 3½" Diameter continued

GB1935

GB2035

GB2135

GB2235

GB2335

Block 14000 Bun Feet 4" Diameter

GB3040

GB3140

GB3240

GB3340

GB3440

GB3540

GB3640

GB3740

GB3840

Block 14000 Bun Feet 4½" Diameter

GB4545

GB4645

GB4745

GB4845

© Copyright StarMark Cabinetry FEBRUARY 2022

Block 14000 Bun Feet 4½" Diameter continued

GB4945

GB5045

GB5145

GB5245

GB5345

GB5445

GB5545

GB5645

Block 14000 Bun Feet 5" Diameter

GB6050

GB6150

GB6250

GB6350

GB6450

GB6550

GB6650

GB6750

Block 14000 Bun Feet 6" Diameter

GB7560

GB7660

Block 14000 Bun Feet 7" Diameter

GB7760

GB7860

GB8070

GB8170

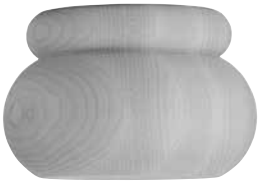
GB8270

GB8370

GB8470

GB8570

GB8670

GB8770

GB8870

© Copyright StarMark Cabinetry FEBRUARY 2022

Block 14250 Corbels by Brown Wood, Inc. NEW! I

DESIGN CONSIDERATIONS
• Solid wood

HOW TO ORDER
• Pricing P-380

PALLADIAN CORBEL - SMALL
Alder, Cherry, Maple, Oak
PADCBLS

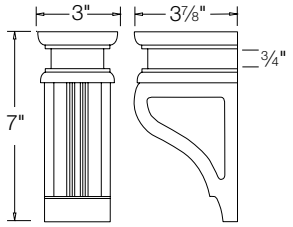

PADCBLS

MISSION CORBEL - SMALL
Alder, Cherry, Maple
MISCBLS

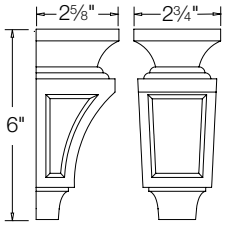

MISCBLS

MISSION CORBEL - MEDIUM
Alder, Cherry, Maple
MISCBLM

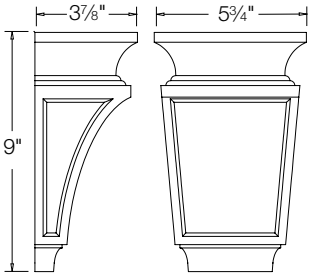

MISCBLM

SHAKER CORBEL - SMALL
Alder, Cherry, Maple, Oak, Quarter Sawn Oak, Walnut
SHKCBLS

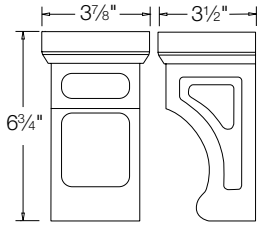

SHKCBLS

APEX CORBEL - SMALL
Alder, Cherry, Maple, Oak, Walnut
APXCBLS

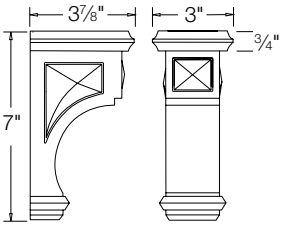

APXCBLS

Block 14260 Bun Feet by Brown Wood, Inc. NEW! I

DESIGN CONSIDERATIONS
• Solid wood

HOW TO ORDER
• Pricing P-380

SQUARE NOUVEAU BUN FOOT
Alder, Cherry, Maple, Oak, Walnut
NOVBUNFT

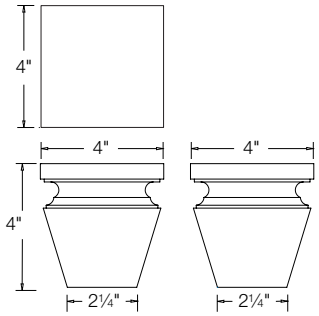

NOVBUNFT

SQUARE LIAM BUN FOOT
Alder, Cherry, Maple, Oak, Walnut
LIABUNFT

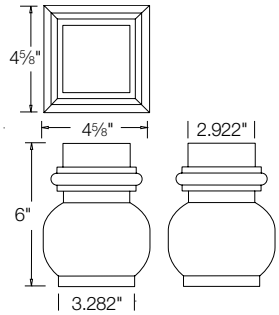

LIABUNFT

SQUARE APEX BUN FOOT
Alder, Cherry, Maple, Oak, Walnut
APXBUNFT

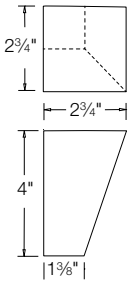

APXBUNFT

© Copyright StarMark Cabinetry FEBRUARY 2022

Block 14260 Bun Feet by Brown Wood, Inc. cont. I

DESIGN CONSIDERATIONS

NEW!

- Solid wood

HOW TO ORDER

- Pricing P-380

SQUARE METRO BUN FOOT
Alder, Cherry, Maple, Oak, Walnut
METBUNFT

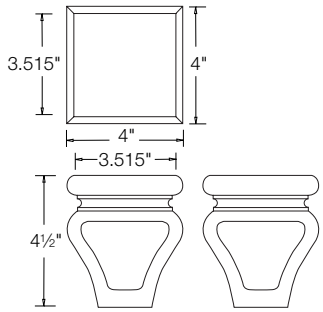

METBUNFT

PALLADIAN BUN FOOT
Alder, Cherry, Maple, Oak
PADBUNFT

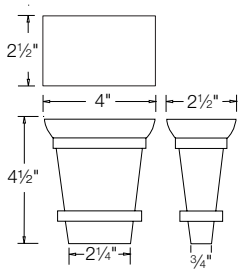

PADBUNFT

SQUARE TULIP BUN FOOT
Alder, Cherry, Maple, Oak
TULBUNFT

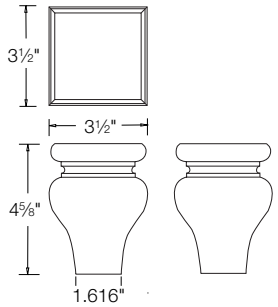

TULBUNFT

Block 14260 Bun Feet by Brown Wood, Inc. cont. I

DESIGN CONSIDERATIONS

NEW!

- Solid wood

HOW TO ORDER

- Pricing P-380

SQUARE ENGLISH ESTATE BUN FOOT
Alder, Cherry, Maple, Oak
ESTBUNFT

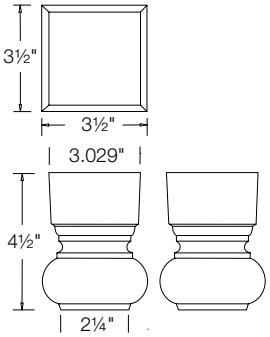

ESTBUNFT

SQUARE STRATFORD BUN FOOT
Alder, Cherry, Maple, Oak
STABUNFT

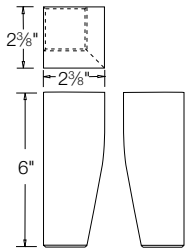

STABUNFT

SQUARE CRAFTSMAN BUN FOOT
Alder, Cherry, Maple, Oak
CRABUNFT

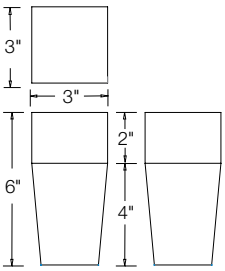

CRABUNFT

© Copyright StarMark Cabinetry FEBRUARY 2022

Block 14270 Posts by Brown Wood, Inc. NEW! I

DESIGN CONSIDERATIONS
- Solid wood

HOW TO ORDER
- To modify dimensions, use **ACMOD** in Block 9085. Specify dimensions in special info. Certain dimensions may require vendor approval.
- Pricing P-380

APEX POST
Alder, Cherry, Maple, Oak, Walnut
APXPST3534

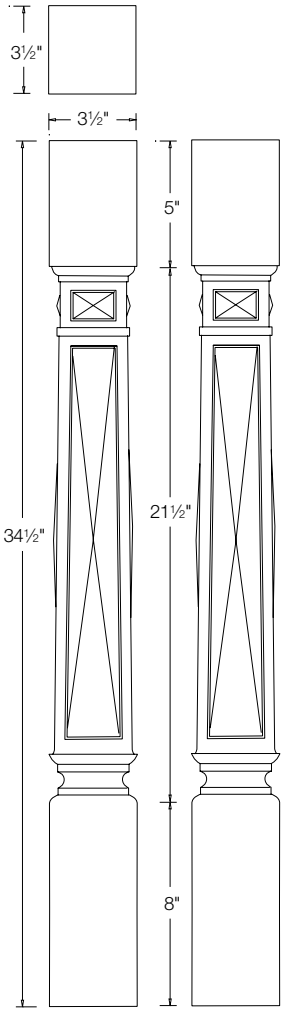

APXPST3534

PALLADIAN POST
Alder, Cherry, Maple, Oak, Walnut
PADPST3534

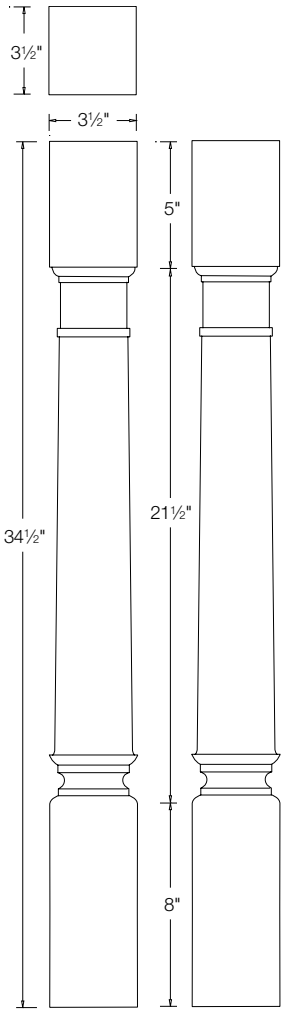

PADPST3534

Block 14270 Posts by Brown Wood, Inc. cont. I

NEW!

DESIGN CONSIDERATIONS
- Solid wood

HOW TO ORDER
- To modify dimensions, use **ACMOD** in Block 9085. Specify dimensions in special info. Certain dimensions may require vendor approval.
- Pricing P-380

SQUARE POST
Alder, Cherry, Maple, Oak, Walnut
SQPST2X2

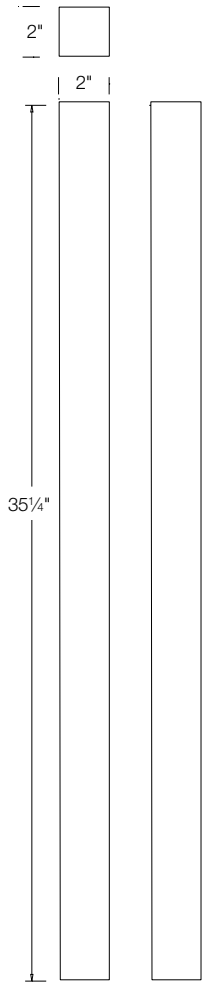

SQPST2X2

SQUARE POST WITH TAPER
Alder, Cherry, Maple, Oak, Walnut
SQPST2X2TA

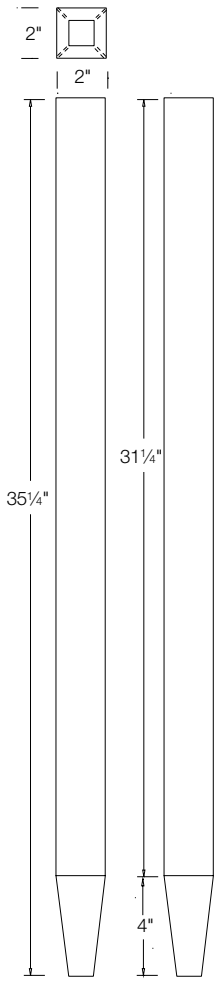

SQPST2X2TA

© Copyright StarMark Cabinetry FEBRUARY 2022

Block 15100 Decorative Accents from Art for Everyday

DESIGN CONSIDERATIONS
Alder, Cherry, Maple, Oak and Walnut
• Art for Everyday decorative accents are solid wood.

HOW TO ORDER
• There is an extended lead time for Art for Everyday decorative accents.
• Pricing P-381-426

Block 15100 Traditional Art Corbels

AECBLPNC2
4¾" W x 5" D x 9½" H
AECBLPNC3
6⅛" W x 6½" D x 13¼" H

AECBLPNC4
7½" W x 7¾" D x 15⅜" H

AECBLPN2
4¾" W x 5" D x 9½" H
AECBLPN3
6⅛" W x 6½" D x 13¼" H

AECBLPN4
7½" W x 7¾" D x 15⅜" H
AECBLPN5
14" W x 7¾" D x 15⅜" H

AECBLBR1
3⅝" W x 4½" D x 9" H
AECBLBR2
5⅜" W x 6¾" D x 13⅜" H

AECBLBR3
6¼" W x 7½" D x 18" H

Block 15100 Traditional Art Corbels

AECBLBRC2
2¾" W x 6½" D x 10" H
AECBLBRC3
3½" W x 8" D x 12" H

AECBLBRC4
4" W x 9⅛" D x 14" H
AECBLBRC5
6½" W x 12" D x 10" H

AECBLBRB2
4¼" W X 8¼" D X 11¾" H
AECBLBRB3
5" W X 10" D X 14" H

AECBLBRB4
5½" W X 11⅜" D X 16⅜" H

AECBLWBR2
5½" W x 5" D x 9" H

AECBLWBR3
7⅛" W x 6¾" D x 13⅛" H

© Copyright StarMark Cabinetry FEBRUARY 2022

Block 15100 Decorative Accents from Art for Everyday

I

ART FOR EVERYDAY INC.
Architectural Woodcarvings

DESIGN CONSIDERATIONS
Alder, Cherry, Maple, Oak and Walnut
• Art for Everyday decorative accents are solid wood.

HOW TO ORDER
• There is an extended lead time for Art for Everyday decorative accents.
• Pricing P-381-426

Block 15100 Traditional Art Corbels

I

AECBLNBR1
3½" W x 5" D x 8½" H

AECBLNBR2
4⅜" W x 7½" D x 14" H

AECBLFB2
1¾" W x 7¾" D x 10" H

AECBLFB4
1¾" W x 11" D x 14⅜" H

AECBLFB3
1¾" W x 9½" D x 12½" H

AECBLRH3
5" W x 10" D x 10" H

AECBLRH4
6" W x 12½" D x 12½" H

Block 15100 Traditional Art Corbels

I

AECBLRS3
5" W x 10" D x 10" H

AECBLRS4
6" W x 12½" D x 12½" H

AECBLTRH2
4½" W x 5¾" D x 10" H

AECBLTR5
8⅝" W X 9¼" D X 21⅝" H

AECBLTR6
8½" W X 6½" D X 21½" H

© Copyright StarMark Cabinetry FEBRUARY 2022

Block 15100 Traditional Art Corbels

AECBLTR0
2½" W X 2¼" D X 4⅜" H
AECBLTR1
4" W X 3" D X 8⅛" H
AECBLTR2
5⅛" W X 4 D" X 12½" H

AECBLTR3
4¾" W X 5½" D X 9½" H
AECBLTR4
5¾" W X 6½" D X 14½" H

AECBLML3
4" W X 3¼" D X 8" H
AECBLML4
6" W X 4¾" D X 12" H

AECBLML5
8" W X 5⅝" D X 14" H

AECBLTB1
3⅜" W x 5" D x 8⅝" H
AECBLTB2
4½" W x 5⅝" D x 11¾" H
AECBLTB3
5½" W x 8¼" D x 16" H
AECBLTB4
6½" W x 10" D x 22" H

AECBLCM1
3¾" W x 3⅜" D x 8" H
AECBLCM2
5¼" W x 5" D x 12" H

AECBLCM3
5¾" W x 6½" D x 14" H

Block 15100 Traditional Art Corbels

AECBLFR1
4" W x 3" D x 8" H
AECBLFR2
5¼" W x 4" D x 12½" H

AECBLFR3
6⅛" W x 5½" D x 15" H

AECBLNH1
2⅝" W x 2½" D x 5¼" H

AECBLNH2
3¾" W x 3⅜" D x 9" H

AECBLFRA1
4" W x 3" D x 8" H
AECBLFRA2
5¼" W x 4" D x 12½" H

AECBLFRA3
6⅛" W x 5½" D x 15" H

AECBLVN1
4¼" W x 3 5/16" D x 8" H
AECBLVN2
5¼" W x 4½" D x 12" H

AECBLVN3
6½"W x 5½" D x 14" H

© Copyright StarMark Cabinetry FEBRUARY 2022

Block 15100 Decorative Accents from Art for Everyday

I

ART FOR EVERYDAY INC.
Architectural Woodcarvings

DESIGN CONSIDERATIONS
Alder, Cherry, Maple, Oak and Walnut
• Art for Everyday decorative accents are solid wood.

HOW TO ORDER
• There is an extended lead time for Art for Everyday decorative accents.
• Pricing P-381-426

Block 15100 Traditional Art Corbels

I

AECBLAC1
4½" W x 1⅞" D x 10" H
AECBLAC2
6" W x 2½" D x 13¾" H
AECBLAC3
7" W x 3¼" D x 21½" H
AECBLAC4
7½" W x 3½" D x 26½" H

AECBLTRP1
4½" W x 1⅞" D x 10" H
AECBLTRP2
6" W x 2½" D x 13¾" H
AECBLTRP3
7" W x 3¼" D x 21½" H
AECBLTRP4
7½" W x 3½" D x 26½" H

AECBLTCY1
5" W x 4" D x 9" H
AECBLTCY2
6½" W x 5¼" D x 12" H

Block 15100 Traditional Art Corbels

I

AECBLWA2
5" W x 3" D x 8" H
AECBLWA3
6⅞" W x 4¼" D x 12⅛" H
AECBLWA4
7⅝" W x 7" D x 15" H

AECBLGR1
4¾" W x 5" D x 10" H
AECBLGR2
5½" W x 7" D x 14" H
AECBLGR3
7¼" W x 8¾" D x 26½" H

AECBLFH2
3½" W x 3" D x 8" H
AECBLFH3
5¼" W x 3¾" D x 12½" H
AECBLFH4
6" W x 5¼" D x 14½" H

© Copyright StarMark Cabinetry FEBRUARY 2022

I available in Inset cabinetry

Block 15100 Traditional Art Corbels

AECBLFF1
4" W x 4" D x 8" H
AECBLFF2
5" W x 5¼" D x 11" H

AECBLFF3
5¾" W x 6¼" D x 14" H

AECBLFLT1
4" W x 3¼" D x 7⅞" H

AECBLFLT2
5⅛" W x 4" D x 12⅝" H

AECBLOL1
4¾" W x 5" D x 10" H
AECBLOL2
5⅝" W x 6⅞" D x 14" H

AECBLOL3
7¼" W x 8¾" D x 26½" H

AECBLOB1
4½" W x 4" D x 7½" H

AECBLOB2
7" W x 6" D x 12" H

Block 15100 Traditional Art Corbels

AECBLGB1
4½" W x 4" D x 7⅜" H

AECBLGB2
7" W x 6" D x 12" H

AECBLFA1
3½" W x 4½" D x 8" H

AECBLFA2
4½" W x 6¼" D x 11⅜" H

AECBLSH1
4¼" W x 4¼" D x 7" H
AECBLSH2

5½" W x 5½" D x 10½" H
AECBLSH3
7" W x 7⅝" D x 13⅛" H

AECBLACF3

5½" W x 5½" D x 20¾" H

© Copyright StarMark Cabinetry FEBRUARY 2022

Block 15100 Decorative Accents from Art for Everyday

DESIGN CONSIDERATIONS

Alder, Cherry, Maple, Oak and Walnut

- Art for Everyday decorative accents are solid wood.

HOW TO ORDER

- There is an extended lead time for Art for Everyday decorative accents.
- Pricing P-381-426

Block 15100 Traditional Art Corbels

AECBLNOL1
1¾″ W x 4½″ D x 12″ H

AECBLNOL2
2″ W x 5½″ D x 16″ H

AECBLNOL3
2″ W x 6¾″ D x 22⅛″ H

AECBLNA1
3½″ W x 5″ D x 9″ H

AECBLNA2
4¾″ W x 7⅞″ D x 13¾″ H

AECBLNA3
6¾″ W x 9″ D x 21⅛″ H

Block 15100 Traditional Art Corbels

AECBLANC24
6½″ W x 7½″ D x 24″ H

AECBLANF24
6½″ W x 7½″ D x 24″ H

Block 15100 Modern Classic Corbels

AECBLEGF2
9½″ W x 8½″ D x 19⅜″ H

AECBLEGF1
7½″ W x 8″ D x 16¼″ H

AECBLDLP
9½″ W x 8⅛″ D x 19″ H

AECBLAVG
9½″ W x 9″ D x 17¾″ H

© Copyright StarMark Cabinetry FEBRUARY 2022

Block 15100 Modern Classic Corbels

AECBLGKV2
10⅛" W x 9½" D x 17½" H

AECBLGKV1
10⅛" W x 8⅝" D x 15½" H

AECBLVSV2
8½" W x 9" D x 12" H

AECBLVSV1
6½" W x 9" D x 12" H

AECBLEWV
8½" W x 8½" D x 17½" H

AECBLNCF
9⅜" W x 7⅝" D x 19⅝" H

AECBLNCS4
9⅝" W x 9⅜" D x 20" H

AECBLNCS3
7½" W x 9¼" D x 20" H

Block 15100 Modern Classic Corbels

AECBLNCS2
9½" W x 8¼" D x 13¾" H

AECBLNCS1
7½" W x 8¼" D x 13⅝" H

AECBLNCP4
13" W x 11¾" D x 12" H

AECBLNCP3
10½" W x 11¾" D x 12" H

AECBLNCP2
12" W x 11¾" D x 8¼" H

AECBLNCP1
9½" W x 11¾" D x 8¼" H

AECBLNPT2
8½" W x 5½" D x 16¾" H

AECBLNPT1
5¾" W x 5½" D x 16¾" H

AECBLNCC2
8½" W x 5½" D x 16¾" H

AECBLNCC1
5¾" W x 5½" D x 16¾" H

© Copyright StarMark Cabinetry FEBRUARY 2022

Block 15100 Decorative Accents from Art for Everyday

I

ART FOR EVERYDAY INC.
Architectural Woodcarvings

DESIGN CONSIDERATIONS
Alder, Cherry, Maple, Oak and Walnut
- Art for Everyday decorative accents are solid wood.

HOW TO ORDER
- There is an extended lead time for Art for Everyday decorative accents.
- Pricing P-381-426

Block 15100 Modern Classic Corbels

I

AECBLG2
8" W x 5¾" D x 20⅛" H

AECBLG1
5" W x 5¾" D x 20⅛" H

AECBLCRF2
8" W x 5¾" D x 20⅛" H

AECBLFAS2
10⅝" W x 6⅞" D x 8" H

AECBLCRF1
5" W x 5¾" D x 20⅛" H

AECBLFAS1
7⅝" W x 6⅞" D x 8" H

Block 15100 Modern Classic Corbels

I

AECBLF2
8" W x 5¾" D x 20⅛" H

AECBLCR2
10¼ W x 10" D x 8" H

AECBLF1
5" W x 5¾" D x 20⅛" H

AECBLCR1
7⅜ W x 10" D x 8" H

AECBLCREV2
10⅝ W x 6⅞" D x 8" H

AECBLCREV1
7⅜ W x 6⅞" D x 8" H

AECBLECF2
6⅛ W x 4" D x 7" H

AECBLECF1
4¼ W x 4" D x 5⅞" H

© Copyright StarMark Cabinetry FEBRUARY 2022

Block 15100 Modern Classic Corbels

AECBLEW2
6⅛ W x 5¼" D x 5¼" H

AECBLEW1
4⅛ W x 5¼" D x 5¼" H

AECBLEP2
6⅛" W x 5¼" D x 5¼" H

AECBLEP1
4⅛" W x 5¼" D x 5¼" H

Block 15100 New Art Corbels

AECBLBAW1
9" W x 8" D x 22½" H

AECBLBAT1
4½" W x 8" D x 22½" H

AECBLBAW2
9" W x 8" D x 22½" H

AECBLBAT2
4½" W x 8" D x 22½" H

Block 15100 New Art Corbels

AECBLBAW3
9" W x 8" D x 12¼" H

AECBLBAT3
4½" W x 8" D x 12¼" H

AECBLBAN1
9" W x 8" D x 22½" H

AECBLMA1
9" W x 8" D x 22½" H

AECBLBAN2
9" W x 8" D x 22½" H

AECBLMA2
9" W x 8" D x 22½" H

AECBLBAN3
9" W x 8" D x 12¼" H

AECBLMA3
9" W x 8" D x 12¼" H

© Copyright StarMark Cabinetry FEBRUARY 2022

Block 15100 Decorative Accents from Art for Everyday

DESIGN CONSIDERATIONS
Alder, Cherry, Maple, Oak and Walnut
- Art for Everyday decorative accents are solid wood.

HOW TO ORDER
- There is an extended lead time for Art for Everyday decorative accents.
- Pricing P-381-426

Block 15100 New Art Corbels

AECBLMAT1
4½" W x 8" D x 22½" H

AECBLCRBA
8" W x 8" D x 12¼" H

AECBLMAT2
4½" W x 8" D x 22½" H

AECBLCRMA
8" W x 8" D x 12¼" H

AECBLMAT3
4½" W x 8" D x 12¼" H

AECBLCRAR
8" W x 8" D x 12¼" H

Block 15100 Linea Corbels

AECBLLIN01
4" W x 9" D x 14" H

AECBLLIN02
4" W x 9" D x 14" H

AECBLLIN03
4" W x 9" D x 14" H

AECBLLIN04
4" W x 9" D x 14" H

AECBLLIN05
6" W x 7" D x 14" H

AECBLLIN06
6" W x 8" D x 14" H

© Copyright StarMark Cabinetry FEBRUARY 2022

Block 15100 Linea Corbels

AECBLLIN07
6" W x 7" D x 14" H

AECBLLIN08
4" W x 9" D x 14" H

AECBLLIN09
4" W x 9" D x 14" H

AECBLLIN10
4" W x 9" D x 14" H

AECBLLIN11
4" W x 9" D x 14" H

Block 15100 New York Corbels

AECBLNY01
7" W x 8" D x 14" H

AECBLNY02
5" W x 9¼" D x 13½" H

AECBLNY03
7" W x 10" D x 14" H

AECBLNY04
5" W x 12¼" D x 15" H

AECBLNY05
7" W x 10" D x 14" H

© Copyright StarMark Cabinetry FEBRUARY 2022

Block 15100 Decorative Accents from Art for Everyday

I

ART FOR EVERYDAY INC.
Architectural Woodcarvings

DESIGN CONSIDERATIONS
Alder, Cherry, Maple, Oak and Walnut
- Art for Everyday decorative accents are solid wood.

HOW TO ORDER
- There is an extended lead time for Art for Everyday decorative accents.
- Pricing P-381-426

Block 15100 Traditional Art Appliques

I

AEAPLA16
16″ L x 3⅜″ H x ⅝″ T
AEAPLA20
20″ L x 4½″ H x ¾″ T

AEAPLA24
24″ L x 5½″ H x ¾″ T
AEAPLA32
32″ L x 6″ H x ⅞″ T

AEAPLA7
7″ L x 3″ H x ⅝″ T pair
AEAPLA9
9″ L x 3¾″ H x ¾″ T pair

AEAPLA11
11″ L x 4⅞″ H x ¾″ T pair

AEAPLOR32
32″ L x 8″ H x ¾″ T

AEAPLOR14
14⅛″ L x 5″ H x ¾″ T pair

AEAPLBEL36
36″ L x 6″ H x ⅞″

AEAPLBEL40
40″ L x 7″ H x 1″ T

AEAPLAO20
20″ L x 4⅞″ H x ¾″ T
AEAPLAO24
24″ L x 6″ H x ¾″ T

AEAPLAO32
32″ L x 7″ H x ⅞″ T

Block 15100 Traditional Art Appliques

I

AEAPLDS3
4¾″ W x 6⅛″ H x ⅝″ T pair

AEAPLCO4
12½″ L x 5½″ H x ⅝″ T pair

AEAPLCA4
12½″ L x 5½″ H x ⅝″ T pair

AEAPLCG4
12½″ L x 5½″ H x ⅝″ T pair

AEAPLVAC8
2¾″ W x 8″ H x ½″ T
AEAPLVAC10
3½″ W x 10½″ H x ½″ T

AEAPLVAC12
5″ W x 12½″ H x ½″ T
AEAPLVAC16
6″ W x 15¾″ H x ¾″ T

© Copyright StarMark Cabinetry FEBRUARY 2022

I available in Inset cabinetry

Block 15100 Traditional Art Appliques

AECORGP2
24⅞" L x 8¼" H x ¾" T pair

AECORAP2
24⅞" L x 8¼" H x ¾" T pair

AECOROP2
24⅞" L x 8¼" H x ¾" T pair

AEAPLSA20
20" L x 4½" H x ¾" T
AEAPLSA24
24" L x 5" H x ¾" T

AEAPLSA32
32" L x 6" H x ⅞" T

AEAPLOL20
20" L x 4½" H x ¾" T
AEAPLOL24
24" L x 5" H x ⅞" T

AEAPLOL32
32" L x 5½" H x 1" T

Block 15100 Traditional Art Appliques

AEAPLO7
7" L x 3½" H x ⅝" T pair
AEAPLO9
9" L x 4½" H x ¾" T pair

AEAPLO11
11" L x 5½" H x ¾" T pair

AEAPLG20
20" L x 4½" H x ¾" T
AEAPLG24
24" L x 5" H x ¾" T

AEAPLG32
32" L x 6" H x ⅞" T

AEAPLG7
7" L x 3½" H x ⅝" T pair
AEAPLG9
9" L x 4½" H x ¾" T pair

AEAPLG11
11" L x 5" H x ¾" T pair

AEAPLDRS2
14¾" W x 7¼" H x 1" T

AEAPLDRS4
15" W x 11½" H x 1" T

AEAPLACC4
11¾" L x 9½" H x ¾" T pair

© Copyright StarMark Cabinetry FEBRUARY 2022

Block 15100 Decorative Accents from Art for Everyday

I

DESIGN CONSIDERATIONS

Alder, Cherry, Maple, Oak and Walnut

- Art for Everyday decorative accents are solid wood.

HOW TO ORDER

- There is an extended lead time for Art for Everyday decorative accents.
- Pricing P-381-426

Block 15100 Traditional Art Appliques

I

AEAPLACP4
11″ L x 6″ H x ¾″ T pair

AEAPLDRS1
15″ W x 14¾″ H x 1″ T

AEROSD
2⅞″ DIA x ½″ T

AEAPLBA24
24″ L x 3¼″ H x ½″ T

AEAPLBA38
38″ L x 4½″ H x ⅞″ T

Block 15100 Traditional Art Appliques

I

AEAPLBO26
26½″ L x 3¼″ H x ½″ T

AEAPLBO40
40″ L x 5″ H x ⅞″ T

AEAPLDRS3
13″ DIA x ⅞″ T

AEAPLVA5
2¾″ W x 5″ H x ½″ T

AEAPLVA9
4⅜″ W x 9″ H x ¾″ T

AEAPLVA7
3½″ W x 7″ H x ⅝″ T

AEAPLAR14
14″ L x 3¼″ H x ⅝″ T

© Copyright StarMark Cabinetry FEBRUARY 2022

Block 15100 Traditional Art Appliques

AEAPLD8
8″ L x ⅞″ W x ⅝″ T
AEAPLD10
10″ L x ⅞″ W x ⅝″ T

AEAPLD12
12″ L x ⅞″ W x ⅝″ T
AEAPLD16
16″ L x ⅞″ W x ⅝″ T

AEAPLDM20
20″ L x ⅞″ W x ⅝″ T
AEAPLDM24
24″ L x ⅞″ W x ⅝″ T

AEAPLDM28
28″ L x ⅞″ W x ⅝″ T
AEAPLDM32
32″ L x ⅞″ W x ⅝″ T

AEAPLD2
1⅞″ W x 1⅞″ H x ⅝″ T

Block 15100 Traditional Art Rosettes

AEROSA1
4″ DIA x ⅝″ T
AEROSA2
6″ DIA x ¾″ T

AEROSA3
8″ DIA x 1″ T

AEROSG1
4″ DIA x ⅝″ T
AEROSG2
6″ DIA x ¾″ T

AEROSG3
8″ DIA x 1″ T

AEROSO1
4″ DIA x ⅝″ T
AEROSO2
6″ DIA x ¾″ T

AEROSO3
8″ DIA x 1″ T

AEROSAS2
4″ W x 4″ H x ⅝″ T
AEROSAS3
6″ W x 6″ H x ¾″ T

AEROSAS4
8″ W x 8″ H x ¾″ T

AEROSOR4 13½″ W x 13½″ H x 1 1/16″ T

© Copyright StarMark Cabinetry FEBRUARY 2022

Block 15100 Decorative Accents from Art for Everyday

I

ART FOR EVERYDAY INC.
Architectural Woodcarvings

DESIGN CONSIDERATIONS
Alder, Cherry, Maple, Oak and Walnut
- Art for Everyday decorative accents are solid wood.

HOW TO ORDER
- There is an extended lead time for Art for Everyday decorative accents.
- Pricing P-381-426

Block 15100 Modern Classic Appliques

I

AEAPLDO1L
3" L x 5⅜" H x ½" T

AEAPLDO2R
3" L x 5⅜" H x ½" T

AEAPLFA1L
3¼" L x 5¾" H x ½" T

AEAPLFA2R
3¼" L x 5¾" H x ½" T

AEAPLTE1L
5¼" W x 7¼" H x ½" T

AEAPLTE2R
5¼" W x 7¼" H x ½" T

AEAPLRE1L
2½" L x 5⅜" H x ½" T

AEAPLRE2R
2½" L x 5⅜" H x ½" T

Block 15100 Modern Classic Appliques

I

AEAPLMI1L
3" L x 5⅜" H x ½" T

AEAPLMI2R
3" L x 5⅜" H x ½" T

AEAPLSO1L
5½" W x 5⅜" H x ½" T

AEAPLSO2R
5½" W x 5⅜" H x ½" T

AEAPLLA1L
4⅜" W x 4⅞" H x ½" T

AEAPLLA2R
4⅜" W x 4⅞" H x ½" T

AEAPLDO3
6¾"L x 12" H x ½" T

AEAPLRE3
5⅝" L x 12" H x ½" T

AEAPLMI3
6¾" L x 12" H x ½" T

© Copyright StarMark Cabinetry FEBRUARY 2022

Combine appliques to create custom patterns

Block 15100 Modern Classic Appliques

AEAPLPL1
5⅜" L x 5⅜" H x 1" T

AEAPLPL2
5⅜" L x 5⅜" H x 1" T
available in right and left

AEAPLLF1
4¼" L x 4¼" H x ¾" T

AEAPLLF2
5⅜" L x 5⅜" H x 1" T

AEAPLPS1
4¼" L x 4¼" H x ¾" T

AEAPLPS2
5⅜" L x 5⅜" H x 1" T

AEAPLADR1
4¼" L x 4¼" H x ¾" T

AEAPLADR2
5½" L x 5½" H x 1" T

© Copyright StarMark Cabinetry FEBRUARY 2022

Block 15100 Decorative Accents from Art for Everyday

DESIGN CONSIDERATIONS
Alder, Cherry, Maple, Oak and Walnut
- Art for Everyday decorative accents are solid wood.

HOW TO ORDER
- There is an extended lead time for Art for Everyday decorative accents.
- Pricing P-381-426

Block 15100 Modern Classic Rosettes

AEROSSN1
4¼" DIA x ¾" T

AEROSSN2
5⅜" DIA x 1" T

AEROSEGR1
4¼" DIA x ¾" T

AEROSEGR2
5⅜" DIA x 1" T

AEROSEPR1
4¼" DIA x ¾" T

AEROSEPR2
5¼" DIA x 1" T

AEROSESR1
4¼" DIA x ¾" T

AEROSESR2
5¼" DIA x 1" T

Block 15100 Modern Classic Rosettes

AEROSES
2¼" W x 4¼" H x ¾" T
¾" thick, 1" at center

AEROSEG
2¼" W x 4¼" H x ¾" T
¾" thick, 1" at center

Combine appliques or rosettes to create custom patterns.

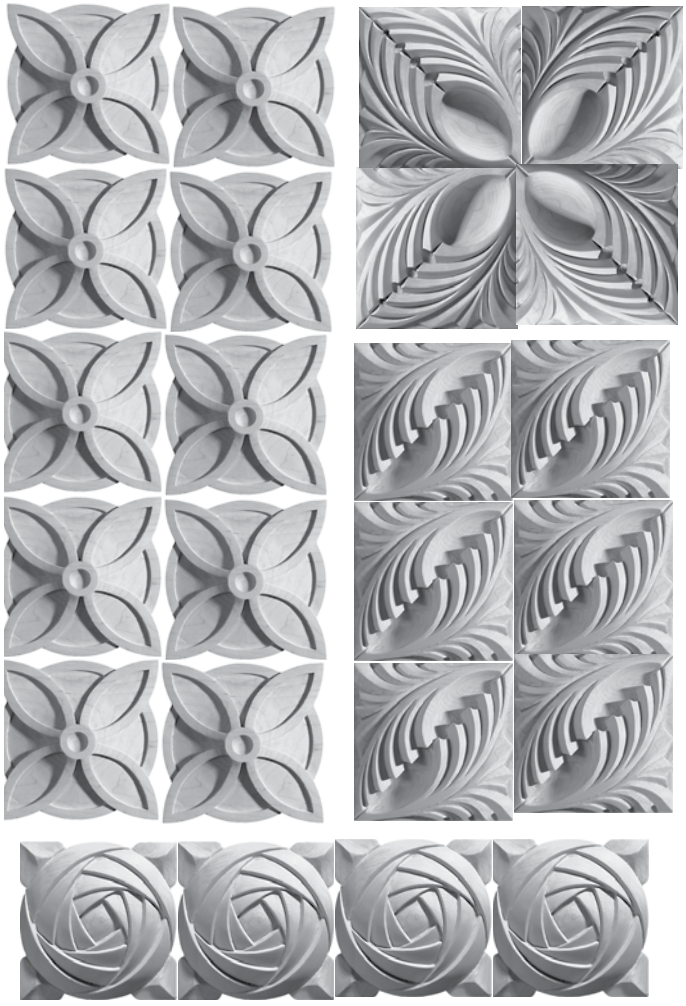

© Copyright StarMark Cabinetry FEBRUARY 2022

Block 15100 Traditional Art Mouldings

AEMLDGF48
48" L x 3½" H x ¾" T

AEMLDG48
48" L x 3" H x ¾" T

AEMLDO48
48" L x 3" H x ¾" T

AEMLDAC48
48" L x 3" H x ¾" T

AEMLDLK1
96" L x 1⅜" H x ¾" T

AEMLDLK2
96" L x 1⅝" H x ¾" T

AEMLDR1
96" L x 1⅜" H x ¾" T

AEMLDR2
96" L x 1⅝" H x ¾" T

AEMLDF1
96" L x 1½" H x ¾" T

AEMLDF2
96" L x 2" H x ¾" T

AEMLDFL2
96" L x 2" H x ¾" T

AEMLDFL3
96" L x 3" H x ¾" T

AEMLDFL4
96" L x 4" H x ¾" T

AEMLDFL5
96" L x 5" H x ¾" T

AEMLDFL6
96" L x 6" H x ¾" T

AEROPE1
¾" W x ⅜" D x 94" H

AEROPE3
1¼" W x ⅝" D x 94" H

AEROPE4
1½" W x ¾" D x 94" H

AEROPE6
2" W x 1" D x 94" H

Block 15100 Modern Classic Mouldings

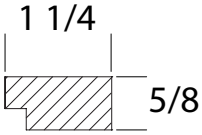

AEMLDNC1
48" L x ⅝" H x 1¼" T

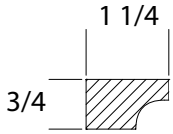

AEMLDNC2
48" L x ¾" H x 1¼" T

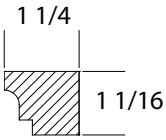

AEMLDNC3
48" L x 1¹⁄₁₆" H x 1¼" T

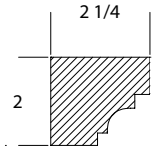

AEMLDNC4
48" L x 2" H x 2¼" T

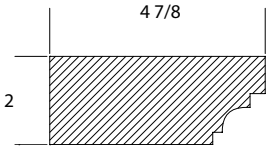

AEMLDNC5
48" L x 2" H x 4⅞" T

© Copyright StarMark Cabinetry FEBRUARY 2022

Block 15100 Decorative Accents from Art for Everyday

I

ART FOR EVERYDAY INC.
Architectural Woodcarvings

DESIGN CONSIDERATIONS

Alder, Cherry, Maple, Oak and Walnut

- Art for Everyday decorative accents are solid wood.

HOW TO ORDER

- There is an extended lead time for Art for Everyday decorative accents.
- Pricing P-381-426

Block 15100 Modern Classic Mouldings

I

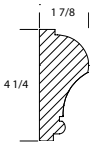

AEMLDNC6
48″ L x 4¼″ H x 1⅞″ T

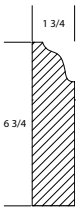

AEMLDNC7
48″ L x 6¾″ H x 1¾″ T

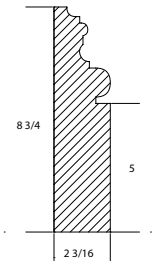

AEMLDNC8
48″ L x 8¾″ H x 2³⁄₁₆ T

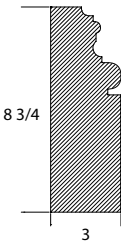

AEMLDNC9
48″ L x 8¾″ H x 3″ T

Block 15100 Modern Classic Mouldings

I

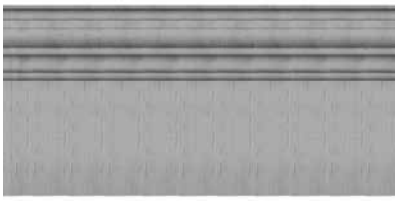

AEMLDNC10
48″ L x 8¾″ H x 1⁵⁄₁₆″ T

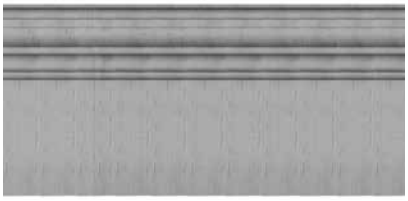

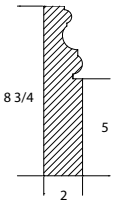

AEMLDNC11
48″ L x 8¾″ H x 2″ T

AEMLDEC
48″ L x 3½″ H x 1¼″ T

AEMLDGK1
48″ L x 4½″ H x 1⅛″ T

AEMLDGK2
48″ L x 6″ H x 1″ T

© Copyright StarMark Cabinetry FEBRUARY 2022

I available in Inset cabinetry

Block 15100 Modern Classic Mouldings

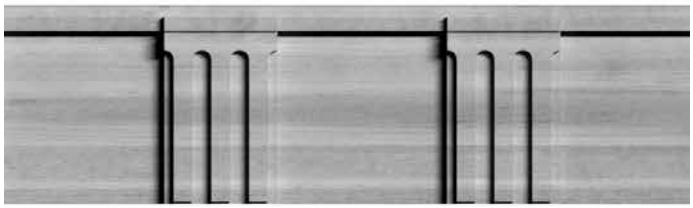

AEMLDDT
50″ L x 7″ H x 1¼″ T

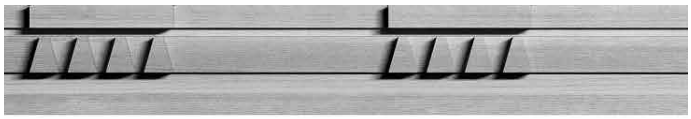

AEMLDDTB
50″ L x 3″ H x 1¼″ T

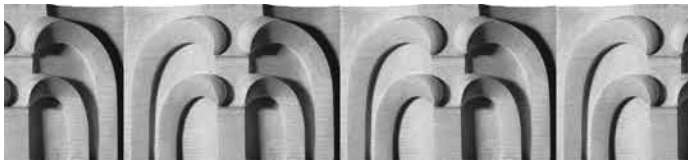

AEMLDAD1
48″ L x 4½″ H x 1⅜″ T

AEMLDAD2
48″ L x 6″ H x 1¼″ T

AEMLDAD3
48″ L x 3½″ H x 1½″ T

AEMLDAD4
48″ L x 5⅜″ H x 2″ T

Block 15100 Modern Classic Mouldings

AEMLDAD5
48″ L x 3⅝″ H x 1¼″ T

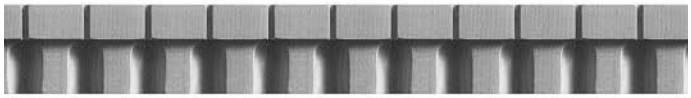

AEMLDAD6
50″ L x 1⅞″ H x 1¼″ T

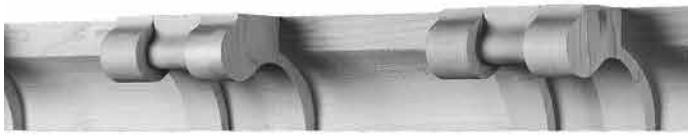

AEMLDAV1
50″ L x 2⅝″ H x 4½″ T

AEMLDAV2
50″ L x 2½″ H x 4½″ T

AEMLDAV3
3¾″ L x 3¾″ H x 2⅝″ T

AEMLDAV4
3¾″ L x 3½″ H x 2½″ T

AEMLDBAV1
50″ L x 2¾″ H x 4½″ T

AEMLDBAV2
5¼″ L x 3½″ H x 2¾″ T

© Copyright StarMark Cabinetry FEBRUARY 2022

Block 15100 Decorative Accents from Art for Everyday

I

ART FOR EVERYDAY INC.
Architectural Woodcarvings

DESIGN CONSIDERATIONS
Alder, Cherry, Maple, Oak and Walnut
- Art for Everyday decorative accents are solid wood.

HOW TO ORDER
- There is an extended lead time for Art for Everyday decorative accents.
- Pricing P-381-426

Block 15100 Modern Classic Mouldings

I

AEMLDAVD
50″ L x 1½″ H x 1¼″ T

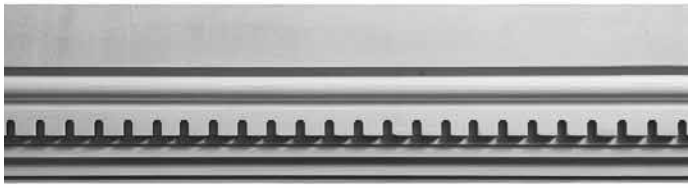

AEMLDRD
48″ L x 5½″ H x 1½″ T

AEMLDW
48″ L x 6″ H x 1″ T

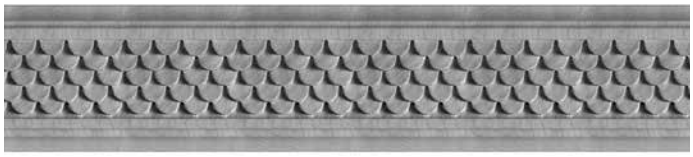

AEMLDSH
48″ L x 4½″ H x 1″ T

AEMLDEW
48″ L x 5½″ H x 2¼″ T

Block 15100 Modern Classic Mouldings

I

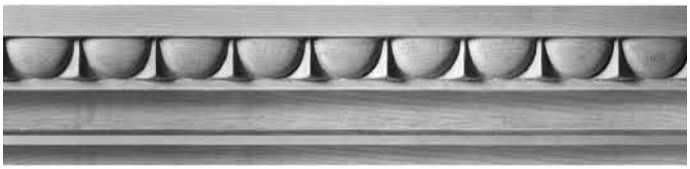

AEMLDED
48″ L x 5″ H x 2″ T

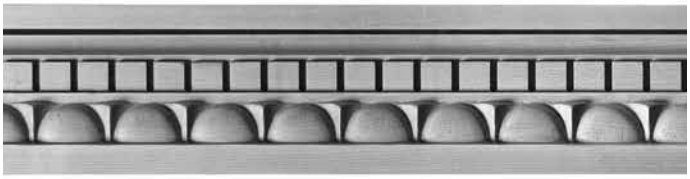

AEMLDDED
48″ L x 5½″ H x 2½″ T

© Copyright StarMark Cabinetry FEBRUARY 2022

Block 15100 New Art Mouldings

AEMLDAR
95⅝" L X 7⅛" H X 2½" T

AEMLDBSCOT
96" L X 6⅜" H X 2" T

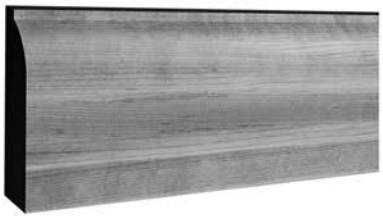

AEMLDBTORU
96" L X 6⅜" H X 2" T

Block 15100 Multiplicity Mouldings

AEMLDCS
96" L x 7 1/16" H x 1⅛" T

AEMLDCSC
96" L x 7 1/16" H x 1⅛" T

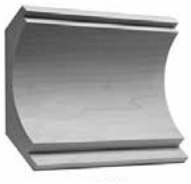

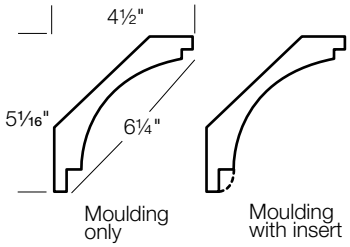

AEMLDCC
96" L x 5 1/16" H x 1⅞" T

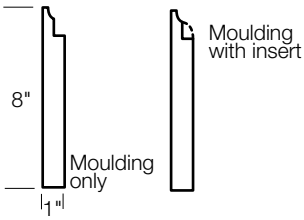

AEMLDB
96" L x 8" H x 1" T

© Copyright StarMark Cabinetry FEBRUARY 2022

Block 15100 Decorative Accents from Art for Everyday

I

ART FOR EVERYDAY INC.
Architectural Woodcarvings

DESIGN CONSIDERATIONS
Alder, Cherry, Maple, Oak and Walnut
- Art for Everyday decorative accents are solid wood.

HOW TO ORDER
- There is an extended lead time for Art for Everyday decorative accents.
- POSTS, TURNINGS, LEGS: To modify dimen-**sions**, use **ACMOD** in Block 9085. Specify dimensions in special info. Certain dimensions may require vendor approval.
- Pricing P-381-426

Block 15100 Multiplicity Mouldings

I

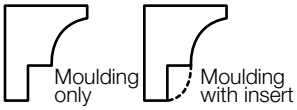

AEMLDLV
96″ L x 2″ H x 1¾″ T

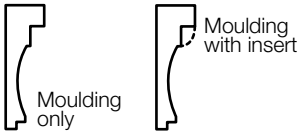

AEMLDC
96″ L x 4½″ H x 1⅜″ T

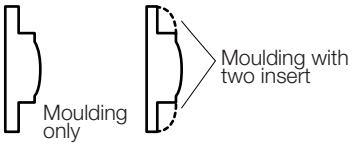

AEMLDCR
96″ L x 3½″ H x 1 1/16″ T

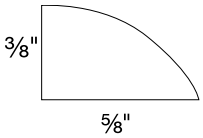

96″ L x ⅝″ H x ⅜″ T
AEMLDINLQR
(wooden)

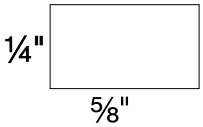

96″ L x ⅝″ H x ¼″ T
AEMLDINLR
(wooden)

Block 15100 New York Mouldings

I

AEMLDNY01
97½″ W x 1⅝″ D x 6″ H

AEMLDNY02
97″ W x 1″ D x 6″ H

© Copyright StarMark Cabinetry FEBRUARY 2022

Block 15100 Traditional Art Island Posts

AEISLMAC3
6″ W x 4″ D x 35″ H

AEISLLAC3
8″ W x 7½″ D x 36½″ H

AEISLFR2
7¾″ W x 6″ D x 36″ H
AEISLFR2L
7¾″ W x 6″ D x 42″ H

AEISLSH2
7½″ W x 7½″ D x 36″ H
AEISLSH2L
7½″ W x 7½″ D x 42″ H

Block 15100 Traditional Art Island Posts

AEISLTR2
7¾″ W x 6″ D x 36″ H
AEISLTR2L
7¾″ W x 6″ D x 42″ H

AEISLFRA2
7¾″ W x 6″ D x 36″ H
AEISLFRA2L
7¾″ W x 6″ D x 42″ H

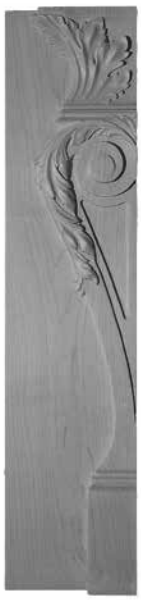

AEBASAC5L
8″ W x 35″ H x 2″ T

AEBASAC5R
8″ W x 35″ H x 2″ T

© Copyright StarMark Cabinetry FEBRUARY 2022

Block 15100 Decorative Accents from Art for Everyday

DESIGN CONSIDERATIONS

Alder, Cherry, Maple, Oak and Walnut

- Art for Everyday decorative accents are solid wood.
- Island Posts are shipped in 3-4 pieces for field assembly.

HOW TO ORDER

- There is an extended lead time for Art for Everyday decorative accents.
- POSTS, TURNINGS, LEGS: To modify dimen-**sions**, use **ACMOD** in Block 9085. Specify dimensions in special info. Certain dimensions may require vendor approval.
- Pricing P-381-426

Block 15100 Traditional Art Island Posts

AEISLAN35
8" W x 17¾" D x 35½" H

Block 15100 Modern Classic Island Posts

AEISLCREL
10⅜" W x 6⅞" D x 35" H

AEISLCRES
7⅜" W x 6⅞" D x 35" H

Block 15100 Modern Classic Island Posts

AEISLCRL
10¼" W x 10" D x 35" H

AEISLCRS
7⅜" W x 10" D x 35" H

AEISLFL
10⅜" W x 6⅞" D x 35" H

AEISLFS
7⅜" W x 6⅞" D x 35" H

© Copyright StarMark Cabinetry FEBRUARY 2022

Block 15100 Modern Classic Island Posts

AEISLNCPL
12″ W x 11¾″ D x 35″ H

AEISLNCPS
9½″ W x 11¾″ D x 35″ H

AEISLNCCL
12″ W x 11¾″ D x 35″ H

AEISLNCCS
9½″ W x 11¾″ D x 35″ H

Block 15100 Modern Classic Island Posts

AEISLNCE
12¾″ W x 6¾″ D x 35″ H

AEISLGRI1
13½″ W x 6¾″ D x 35″ H

AEISLGK1
15¾″ W x 7⅞″ D x 35″ H

AEISLGR
10¼″ W x 6½″ D x 35″ H

© Copyright StarMark Cabinetry FEBRUARY 2022

Block 15100 Decorative Accents from Art for Everyday

ART FOR EVERYDAY INC.
Architectural Woodcarvings

DESIGN CONSIDERATIONS
Alder, Cherry, Maple, Oak and Walnut

- Art for Everyday decorative accents are solid wood.
- Island Posts are shipped in 3-4 pieces for field assembly.

HOW TO ORDER

- There is an extended lead time for Art for Everyday decorative accents.
- POSTS, TURNINGS, LEGS: To modify dimen-**sions**, use **ACMOD** in Block 9085. Specify dimensions in special info. Certain dimensions may require vendor approval.
- Pricing P-381-426

Block 15100 Modern Classic Island Posts

AEISLGRI2
13½" W x 6¾" D x 35" H

AEISLGRI3
13½" W x 6¾" D x 35" H

AEISLNCP4
13" W x 11¾" D x 35" H

AEISLAVG
9½" W x 9" D x 35" H

Block 15100 Modern Classic Island Posts

AEISLNCS2
9½" W x 8¼" D x 35" H

AEISLVSV2
10" W x 9" D x 35" H

AEISLDLP
9½" W x 8⅛" D x 35" H

AEISLEGF2
9½" W x 8½" D x 35" H

© Copyright StarMark Cabinetry FEBRUARY 2022

Block 15100 New Art Island Posts

AEISLBAN1
9″ W x 8″ D x 35½″ H

AEISLBAW1
9″ W x 8″ D x 35½″ H

AEISLBAN2
9″ W x 8″ D x 35½″ H

AEISLBAW2
9″ W x 8″ D x 35½″ H

Block 15100 New Art Island Posts

AEISLMA1
9″ W x 8″ D x 35½″ H

AEISLBAT1
4½″ W x 8″ D x 35½″ H

AEISLMA2
9″ W x 8″ D x 35½″ H

AEISLBAT2
4½″ W x 8″ D x 35½″ H

© Copyright StarMark Cabinetry FEBRUARY 2022

Block 15100 Decorative Accents from Art for Everyday

DESIGN CONSIDERATIONS

Alder, Cherry, Maple, Oak and Walnut

- Art for Everyday decorative accents are solid wood.

HOW TO ORDER

- There is an extended lead time for Art for Everyday decorative accents.
- POSTS, TURNINGS, LEGS: To modify dimen**sions**, use **ACMOD** in Block 9085. Specify dimensions in special info. Certain dimensions may require vendor approval.
- Pricing P-381-426

Block 15100 New Art Island Posts

AEISLMAT1
4½" W x 8" D x 35½" H

AEISLMAT2
4½" W x 8" D x 35½" H

Block 15100 New York Island Post

AEISLNY01
7" W x 9⅝" D x 35½" H

AEISLNY02
7" W x 8" D x 35½" H

Block 15100 Linea Island Post

AEISLLIN04
6½" W x 16" D x 35" H

AEISLNY03
7" W x 8" D x 35½" H

© Copyright StarMark Cabinetry **FEBRUARY 2022**

Block 15100 Traditional Art Mantels

Top view

AEMTLO0
5⅞" H x 44" L x 3½" T
(MOTIF 28" L)

AEMTLO1
5⅞" H x 60" L x 3¼" T
(MOTIF 37¼" L)

Top view

AEMTLG0
5⅞" H x 44" L x 3½" T
(MOTIF 28" L)

AEMTLG1
5⅞" H x 60" L x 3¼" T
(MOTIF 37¼" L)

Top view

AEMTLA0
5⅞" H x 44" L x 3½" T
(MOTIF 28" L)

AEMTLA1
5⅞" H x 60" L x 3¼" T
(MOTIF 37¼" L)

Top view

AEMTLP0
5⅞" H x 44" L x 3⅛" T
(MOTIF 28" L)

AEMTLP1
5⅞" H x 60" L x 3⅛" T
(MOTIF 37¼" L)

Top view

AEMTLS2
49" L x 6" H x 3¼" T

Block 15100 Traditional Art Mantels

Top view

AEMTLFLT2
49" L x 6" H x 3¼" T

AEMTLFP2
8" H x 40" L x 1¾" T
(MOTIF 27" L)

AEMTLFP3
8" H x 52¾" L x 1¾" T
(MOTIF 39¾" L)

AEMTLFOL2
8" H x 40" L x 1¾" T
(MOTIF 27" L)

AEMTLFOL3
8" H x 52¾" L x 1¾" T
(MOTIF 39¾" L)

AEMTLFAL2
8" H x 40" L x 1¾" T
(MOTIF 27" L)

AEMTLFAL3
8" H x 52¾" L x 1¾" T
(MOTIF 39¾" L)

AEMTLFGR1
8" H x 40" L x 1¾" T
(MOTIF 27" L)

AEMTLFGR2
8" H x 52¾" L x 1¾" T
(MOTIF 39¾" L)

© Copyright StarMark Cabinetry FEBRUARY 2022

Block 15100 Decorative Accents from Art for Everyday

I

ART FOR EVERYDAY INC.
Architectural Woodcarvings

DESIGN CONSIDERATIONS
Alder, Cherry, Maple, Oak and Walnut
- Art for Everyday decorative accents are solid wood.

HOW TO ORDER
- There is an extended lead time for Art for Everyday decorative accents.
- POSTS, TURNINGS, LEGS: To modify dimen**sions**, use **ACMOD** in Block 9085. Specify dimensions in special info. Certain dimensions may require vendor approval.
- Pricing P-381-426

Block 15100 Traditional Art Mantels

I

Top view

AEEXTFLT2
49″ L x 6″ H x 1¾″ T

Top view

AEEXTS2
49″ L x 6″ H x 1¾″ T

AEMTLEXT1
48″ L x 5⅞″ H x 1½″ T

AEMTLFAC2 (MOTIF 24″ L)
48″ L x 5⅞″ H x 1⅞″ T

3"

AEMTLLF3
56″ L x 7⅞″ H x 1¾″ T
(MOTIF 50″ L)

Block 15100 Traditional Art Mantels

I

5"

AEMTLBEL48 (MOTIF 38″ L)
48″ L x 9″ H x 1⅜″ T

6"

AEMTLBEL54 (MOTIF 42″ L)
54″ L x 10″ H x 1⅜″ T

© Copyright StarMark Cabinetry **FEBRUARY 2022**

Block 15100 Traditional Art Corner Posts

AECNTR282
2¾" W x 2¾" D x 28½" H
AECNTR342
2¾" W x 2¾" D x 34½" H
AECNTR84
2¾" W x 2¾" D x 84" H
AECNTR90
2¾" W x 2¾" D x 90" H
AECNTR96
2¾" W x 2¾" D x 96" H

AECNSTR282
1¾" W x 1¾" D x 28½" H
AECNSTR342
1¾" W x 1¾" D x 34½" H
AECNSTR84
1¾" W x 1¾" D x 84" H
AECNSTR90
1¾" W x 1¾" D x 90" H
AECNSTR96
1¾" W x 1¾" D x 96" H

AECRNACR28
2¾" W x 2¾" D x 28½" H
AECRNACR34
2¾" W x 2¾" D x 34½" H
AECRNACR84
2¾" W x 2¾" D x 84" H
AECRNACR90
2¾" W x 2¾" D x 90" H
AECRNACR96
2¾" W x 2¾" D x 96" H

Block 15100 Traditional Art Corner Posts

AECRNACC28
2¾" W x 2¾" D x 28½" H
AECRNACC34
2¾" W x 2¾" D x 34½" H
AECRNACC84
2¾" W x 2¾" D x 84" H
AECRNACC90
2¾" W x 2¾" D x 90" H
AECRNACC96
2¾" W x 2¾" D x 96" H

AECRNSAC28
1¾" W x 1¾" D x 28½" H
AECRNSAC34
1¾" W x 1¾" D x 34½" H
AECRNSAC84
1¾" W x 1¾" D x 84" H
AECRNSAC90
1¾" W x 1¾" D x 90" H
AECRNSAC96
1¾" W x 1¾" D x 96" H

AECNOR27
2¾" W x 2¾" D x 27" H
AECNOR286
2¾" W x 2¾" D x 28 5/16" H
AECNOR298
2¾" W x 2¾" D x 29⅛" H
AECNOR30
2¾" W x 2¾" D x 30" H
AECNOR36
2¾" W x 2¾" D x 36" H
AECNOR428
2¾" W x 2¾" D x 42⅛" H

AECNAC27
2¾" W x 2¾" D x 27" H
AECNAC286
2¾" W x 2¾" D x 28 5/16" H
AECNAC298
2¾" W x 2¾" D x 29⅛" H
AECNAC30
2¾" W x 2¾" D x 30" H
AECNAC36
2¾" W x 2¾" D x 36" H
AECNAC428
2¾" W x 2¾" D x 42⅛" H

© Copyright StarMark Cabinetry FEBRUARY 2022

Block 15100 Decorative Accents from Art for Everyday

I

ART FOR EVERYDAY INC.
Architectural Woodcarvings

DESIGN CONSIDERATIONS
Alder, Cherry, Maple, Oak and Walnut
- Art for Everyday decorative accents are solid wood.

HOW TO ORDER
- There is an extended lead time for Art for Everyday decorative accents.
- POSTS, TURNINGS, LEGS: To modify dimen**sions**, use **ACMOD** in Block 9085. Specify dimensions in special info. Certain dimensions may require vendor approval.
- Pricing P-381-426

Block 15100 Traditional Art Corner Posts

I

AECRNACR27
2¾" W x 2¾" D x 27" H
AECRNACR72
2¾" W x 2¾" D x 28 5/16" H
AECRNACR74
2¾" W x 2¾" D x 29 1/8" H
AECRNACR30
2¾" W x 2¾" D x 30" H
AECRNACR36
2¾" W x 2¾" D x 36" H
AECRNACR42
2¾" W x 2¾" D x 42 1/8" H

AECRNACC27
2¾" W x 2¾" D x 27" H
AECRNACC72
2¾" W x 2¾" D x 28 5/16" H
AECRNACC74
2¾" W x 2¾" D x 29 1/8" H
AECRNACC30
2¾" W x 2¾" D x 30" H
AECRNACC36
2¾" W x 2¾" D x 36" H
AECRNACC42
2¾" W x 2¾" D x 42 1/8" H

Block 15100 Traditional Art Corner Posts

I

AECRNSAC27
1¾" W x 1¾" D x 27" H
AECRNSAC72
1¾" W x 1¾" D x 28 5/16" H
AECRNSAC74
1¾" W x 1¾" D x 29 1/8" H
AECRNSAC30
1¾" W x 1¾" D x 30" H
AECRNSAC36
1¾" W x 1¾" D x 36" H
AECRNSAC42
1¾" W x 1¾" D x 42 1/8" H

AECNGR27
2¾" W x 2¾" D x 27" H
AECNGR286
2¾" W x 2¾" D x 28 5/16" H
AECNGR298
2¾" W x 2¾" D x 29 1/8" H
AECNGR30
2¾" W x 2¾" D x 30" H
AECNGR36
2¾" W x 2¾" D x 36" H
AECNGR428
2¾" W x 2¾" D x 42 1/8" H

© Copyright StarMark Cabinetry FEBRUARY 2022

Block 15100 Traditional Art Corner Posts

AECNTR27
2¾" W x 2¾" D x 27" H
AECNTR286
2¾" W x 2¾" D x 28 5/16" H
AECNTR298
2¾" W x 2¾" D x 29⅛" H
AECNTR30
2¾" W x 2 ¾" D x 30" H
AECNTR36
2¾" W x 2 ¾" D x 36" H
AECNTR428
2¾" W x 2¾" D x 42⅛" H

AECNOR282
2¾" W x 2¾" D x 28½" H
AECNOR342
2¾" W x 2¾" D x 34½" H
AECNOR84
2¾" W x 2¾" D x 84" H
AECNOR90
2¾" W x 2¾" D x 90" H
AECNOR96
2¾" W x 2¾" D x 96" H

AECNAC282
2¾" W x 2¾" D x 28½" H
AECNAC342
2¾" W x 2¾" D x 34½" H
AECNAC84
2¾" W x 2¾" D x 84" H
AECNAC90
2¾" W x 2¾" D x 90" H
AECNAC96
2¾" W x 2¾" D x 96" H

Block 15100 Traditional Art Corner Posts

AECNSOR282
1¾" W x 1¾" D x 28½" H
AECNSOR342
1¾" W x 1¾" D x 34½" H
AECNSOR84
1¾" W x 1¾" D x 84" H
AECNSOR90
1¾" W x 1¾" D x 90" H
AECNSOR96
1¾" W x 1¾" D x 96" H

AECNGR282
2¾" W x 2¾" D x 28½" H
AECNGR342
2¾" W x 2¾" D x 34½" H
AECNGR84
2¾" W x 2¾" D x 84" H
AECNGR90
2¾" W x 2¾" D x 90" H
AECNGR96
2¾" W x 2¾" D x 96" H

AECNSOR27
1¾" W x 1¾" D x 27" H
AECNSOR286
1¾" W x 1¾" D x 28 5/16" H
AECNSOR298
1¾" W x 1¾" D x 29⅛" H
AECNSOR30
1¾" W x 1¾" D x 30" H
AECNSOR36
1¾" W x 1¾" D x 36" H
AECNSOR428
1¾" W x 1¾" D x 42⅛" H

AECNSTR27
1¾" W x 1¾" D x 27" H
AECNSTR286
1¾" W x 1¾" D x 28 5/16" H
AECNSTR298
1¾" W x 1¾" D x 29⅛" H
AECNSTR30
1¾" W x 1¾" D x 30" H
AECNSTR36
1¾" W x 1¾" D x 36" H
AECNSTR428
1¾" W x 1¾" D x 42⅛" H

© Copyright StarMark Cabinetry FEBRUARY 2022

Block 15100 Decorative Accents from Art for Everyday

ART FOR EVERYDAY INC.
Architectural Woodcarvings

DESIGN CONSIDERATIONS
Alder, Cherry, Maple, Oak and Walnut
- Art for Everyday decorative accents are solid wood.

HOW TO ORDER
- There is an extended lead time for Art for Everyday decorative accents.
- POSTS, TURNINGS, LEGS: To modify dimen-**sions**, use **ACMOD** in Block 9085. Specify dimensions in special info. Certain dimensions may require vendor approval.
- Pricing P-381-426

Block 15100 Traditional Art Corner Posts

AECNOF27
3" W x ¾" D x 27" H
AECNOF286
3" W x ¾" D x 28 5/16" H
AECNOF298
3" W x ¾" D x 29⅛" H
AECNOF30
3" W x ¾" D x 30" H
AECNOF36
3" W x ¾" D x 36" H
AECNOF428
3" W x ¾" D x 42⅛" H

AECRNACF28
3" W x ¾" D x 28½" H
AECRNACF34
3" W x ¾" D x 34½" H
AECRNACF84
3" W x ¾" D x 84" H
AECRNACF90
3" W x ¾" D x 90" H
AECRNACF96
3" W x ¾" D x 96" H

AECRNTRF28
3" W x ¾" D x 28½" H
AECRNTRF34
3" W x ¾" D x 34½" H
AECRNTRF84
3" W x ¾" D x 84" H
AECRNTRF90
3" W x ¾" D x 90" H
AECRNTRF96
3" W x ¾" D x 96" H

Block 15100 Traditional Art Corner Posts

AECNOF282
3" W x ¾" D x 28½" H
AECNOF342
3" W x ¾" D x 34½" H
AECNOF84
3" W x ¾" D x 84" H
AECNOF90
3" W x ¾" D x 90" H
AECNOF96
3" W x ¾" D x 96" H

AECRNACF27
3" W x ¾" D x 27" H
AECRNACF72
3" W x ¾" D x 28 5/16" H
AECRNACF74
3" W x ¾" D x 29⅛" H
AECRNACF30
3" W x ¾" D x 30" H
AECRNACF36
3" W x ¾" D x 36" H
AECRNACF42
3" W x ¾" D x 42⅛" H

AECRNTRF27
3" W x ¾" D x 27" H
AECRNTRF72
3" W x ¾" D x 28 5/16" H
AECRNTRF74
3" W x ¾" D x 29⅛" H
AECRNTRF30
3" W x ¾" D x 30" H
AECRNTRF36
3" W x ¾" D x 36" H
AECRNTRF42
3" W x ¾" D x 42⅛" H

© Copyright StarMark Cabinetry FEBRUARY 2022

Block 15100 Traditional Art Corner Posts

AECNSL30
2¾" W x 2¾" D x 30" H
AECNSL48
2¾" W x 2¾" D x 48" H
AECNSL96
2¾" W x 2¾" D x 96" H

AECNSS30
1¾" W x 1¾" D x 30" H
AECNSS48
1¾" W x 1¾" D x 48" H
AECNSS96
1¾" W x 1¾" D x 96" H

AECNLT48
1¾" W x 1¾" D x 48" H
AECNLT96
1¾" W x 1¾" D x 96" H

AECNRA
2¾" W x 2¾" D x 34½" H

Block 15100 Traditional Art Queen Anne Legs

AEQAC6
4" W x 4" D x 6" H

AEQLEG2L
3" W x 3" D x 5⅞" H

AEQLEG2R
3" W x 3" D x 5⅞" H

© Copyright StarMark Cabinetry FEBRUARY 2022

Block 15100 Decorative Accents from Art for Everyday

I

ART FOR EVERYDAY INC.
Architectural Woodcarvings

DESIGN CONSIDERATIONS

Alder, Cherry, Maple, Oak and Walnut

- Art for Everyday decorative accents are solid wood.

HOW TO ORDER

- There is an extended lead time for Art for Everyday decorative accents.
- POSTS, TURNINGS, LEGS: To modify dimen**sions**, use **ACMOD** in Block 9085. Specify dimensions in special info. Certain dimensions may require vendor approval.
- Pricing P-381-426

Block 15100 Traditional Art Queen Anne Legs

I

AEQLEG4
3" W x 3" D x 4" H
AEQLEG42
3⅛" W x 3⅛" D x 4½" H

AEQLEG5
3⅜" W x 3⅜" D x 5" H
AEQLEG6
3⅞" W x 3⅞" D x 6" H

AEQRA6
3¼" W x 3¼" D x 6" H

AEQLEGV
2⁵⁄₁₆" W x 2⁵⁄₁₆" D x 6¹¹⁄₁₆" H

Block 15100 Modern Classic Corner Posts

I

AECNGK26
2¾" W x 2¾" D x 26¼" H
AECNGK32
2¾" W x 2¾" D x 32¼" H
AECNGK42
2¾" W x 2¾" D x 42" H

AECNAD26
2¾" W x 2¾" D x 26¼" H
AECNAD32
2¾" W x 2¾" D x 32¼" H
AECNAD42
2¾" W x 2¾" D x 42" H

AECNAV26
2¾" W x 2¾" D x 26¼" H
AECNAV32
2¾" W x 2¾" D x 32¼" H
AECNAV42
2¾" W x 2¾" D x 42" H

AECNAB26
2¾" W x 2¾" D x 26¼" H
AECNAB32
2¾" W x 2¾" D x 32¼" H
AECNAB42
2¾" W x 2¾" D x 42" H

© Copyright StarMark Cabinetry FEBRUARY 2022

Block 15100 Modern Classic Corner Posts

AECNNCS26
2¾" W x 2¾" D x 26¼" H
AECNNCS32
2¾" W x 2¾" D x 32¼" H
AECNNCS42
2¾" W x 2¾" D x 42" H

AECNAV34
2¾" W x 2¾" D x 34½ H
AECNAV40
2¾" W x 2¾" D x 40½ H

AECNGK34
2¾" W x 2¾" D x 34½ H
AECNGK40
2¾" W x 2¾" D x 40½" H

AECNAB34
2¾" W x 2¾" D x 34½" H
AECNAB40
2¾" W x 2¾" D x 40½" H

Block 15100 Modern Classic Corner Posts

AECNAD34
2¾" W x 2¾" D x 34½" H
AECNAD40
2¾" W x 2¾" D x 40½" H

AECNNCS34
2¾" W x 2¾" D x 34½" H
AECNNCS40
2¾" W x 2¾" D x 40½" H

AEBSCRN
3⅞" W x 3⅞" D x 8¾" H

© Copyright StarMark Cabinetry FEBRUARY 2022

Block 15100 Decorative Accents from Art for Everyday

DESIGN CONSIDERATIONS

Alder, Cherry, Maple, Oak and Walnut

- Art for Everyday decorative accents are solid wood.

HOW TO ORDER

- There is an extended lead time for Art for Everyday decorative accents.
- POSTS, TURNINGS, LEGS: To modify dimen-**sions**, use **ACMOD** in Block 9085. Specify dimensions in special info. Certain dimensions may require vendor approval.
- Pricing P-381-426

Block 15100 New Art Corner Posts

2¾" bottom
AECNB226
2¾" W X 2¾" D X 26"H
AECNB228
2¾" W X 2¾" D X 28"H
AECNB232
2¾" W X 2¾" D X 32"H
AECNB242
2¾" W X 2¾" D X 42"H

6" bottom (not shown)
AECNB235
2¾" W X 2¾" D X 35½"H
AECNB284
2¾" W X 2¾" D X 84"H
AECNB290
2¾" W X 2¾" D X 90"H
AECNB296
2¾ " W X 2¾" D X 96"H

2¾" bottom
AECNMA226
2¾" W X 2¾" D X 26"H
AECNMA228
2¾" W X 2¾" D X 28"H
AECNMA232
2¾" W X 2¾" D X 32"H
AECNMA242
2¾" W X 2¾" D X 42"H

6" bottom (not shown)
AECNMA235
2¾" W X 2¾" D X 35½"H
AECNMA284
2¾" W X 2¾" D X 84"H
AECNMA290
2¾" W X 2¾" D X 90"H
AECNMA296
2¾" W X 2¾" D X 96"H

Block 15100 New Art Corner Posts

2¾" bottom
AECNR226
2¾" WX 2¾" D X 26"H
AECNR228
2¾" W X 2¾" D X 28"H
AECNR232
2¾" W X 2¾" D X 32"H
AECNR242
2¾" W X 2¾" D X 42"H

6" bottom (not shown)
AECNR235
2¾" W X 2¾ X 35½"H
AECNR284
2¾" W X 2¾" D X 84"H
AECNR290
2¾" W X 2¾" D X 90"H
AECNR296
2¾" W X 2¾" D X 96"H

© Copyright StarMark Cabinetry **FEBRUARY 2022**

Block 15100 New Art Corner Posts

2¾" bottom
AECND226
2¾" W X 2¾" D X 26"H
AECND228
2¾" W X 2¾" D X 28"H
AECND232
2¾" W X 2¾" D X 32"H
AECND242
2¾" W X 2¾" D X 42"H

6" bottom (not shown)
AECND235
2¾" W X 2¾" D X 35½"H
AECND284
2¾" W X 2¾" D X 84"H
AECND290
2¾" W X 2¾" D X 90"H
AECND296
2¾" W X 2¾" D X 96"H

2¾" bottom
AECNT226
2¾" W X 2¾" D X 26"H
AECNT228
2¾" W X 2¾" D X 28"H
AECNT232
2¾" W X 2¾" D X 32"H
AECNT242
2¾" W X 2¾" D X 42"H

6" bottom (not shown)
AECNT235
2¾" W X 2¾" D X 35½"H
AECNT284
2¾" W X 2¾" D X 84"H
AECNT290
2¾" W X 2¾" D X 90"H
AECNT296
2¾" W X 2¾" D X 96"H

2¾" bottom
AECNM226
2¾" W X 2¾" D X 26"H
AECNM228
2¾" W X 2¾" D X 28"H
AECNM232
2¾ X 2¾ X" D 32"H
AECNM242
2¾" W X 2¾" D X 42"H

6" bottom (not shown)
AECNM235
2¾" W X 2¾" D X 35½"H
AECNM284
2¾" W X 2¾" D X 84"H
AECNM290
2¾" W X 2¾" D X 90"H
AECNM296
2¾" W X 2¾" D X 96"H

Block 15100 New Art Corner Posts

AECNB535
5" W X 5" D X 35½" H
AECNB542
5" W X 5" D X 42" H

AECND535
5" W X 5" D X 35½" H
AECND542
5" W X 5" D X 42" H

AECNR535
5" W X 5" D X 35½" H
AECNR542
5" W X 5" D X 42" H

© Copyright StarMark Cabinetry **FEBRUARY 2022**

Block 15100 Decorative Accents from Art for Everyday

I

ART FOR EVERYDAY INC.
Architectural Woodcarvings

DESIGN CONSIDERATIONS

Alder, Cherry, Maple, Oak and Walnut

- Art for Everyday decorative accents are solid wood.

HOW TO ORDER

- There is an extended lead time for Art for Everyday decorative accents.
- POSTS, TURNINGS, LEGS: To modify dimen**sions**, use **ACMOD** in Block 9085. Specify dimensions in special info. Certain dimensions may require vendor approval.
- Pricing P-381-426

Block 15100 New Art Corner Posts

I

AECNT535
5" W X 5" D X 35½" H
AECNT542
5" W X 5" D X 42" H

AECNMAR53
5" W X 5" D X 35½" H
AECNMAR54
5" W X 5" D X 42" H

AECNMR535
5" W X 5" D X 35½" H
AECNMR542
5" W X 5" D X 42" H

AECNM535
5" W X 5" D X 35½" H
AECNM542
5" W X 5" D X 42" H

Block 15100 New York Corner Post

I

AECRNNY01
7" W x 7" D x 35½" H

AECRNNY02
5" W x 5" D x 35½" H

AECRNNY03
3½" W x 3½" D x 35½" H

AECRNNY04
2¾" W x 2¾" D x 35½" H

© Copyright StarMark Cabinetry FEBRUARY 2022

I available in Inset cabinetry

Block 15100 New York Corner Post

AECRNNY05
5" W x 5" D x 35½" H

Block 15100 New Art Bases

AECORFTS1
6⅝" W X 6⅝" D X 6⅜" H

AECORFTS2
8⅞" W X 8⅞" D X 6⅜" H

AECORFTT1
6⅜" W X 6⅜" D X 6⅜" H

AECORFTT2
8½" W X 8½" D X 6⅜" H

AECORFTSR1
3⅞" W X 3⅞" D X 6⅜" H

AECORFTSR2
6⅛" W X 6⅛" D X 6⅜" H

AECORFTTR1
3⅝" W X 3⅝" D X 6⅜" H

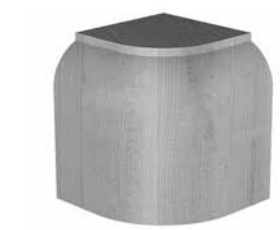

AECORFTTR2
5⅞" W X 5⅞" D X 6⅜" H

© Copyright StarMark Cabinetry FEBRUARY 2022

Block 15100 Decorative Accents from Art for Everyday

I

ART FOR EVERYDAY INC.
Architectural Woodcarvings

DESIGN CONSIDERATIONS

Alder, Cherry, Maple, Oak and Walnut

- Art for Everyday decorative accents are solid wood.

HOW TO ORDER

- There is an extended lead time for Art for Everyday decorative accents.
- POSTS, TURNINGS, LEGS: To modify dimen-**sions**, use **ACMOD** in Block 9085. Specify dimensions in special info. Certain dimensions may require vendor approval.
- Pricing P-381-426

Block 15100 Traditional Art Legs

I

AELEGB4
4¼" W x 4¼" D x 35½" H

AELEGA1
3¼" W x 3¼" D x 36" H

Block 15100 Traditional Art Legs

I

AELEGB3
3⅞" W x 3⅞" D x 31½" H

AELEGA4
3¼" W x 3¼" D x 36" H

© Copyright StarMark Cabinetry **FEBRUARY 2022**

Block 15100 Traditional Art Legs

AEPOSTACS5
5⅜" W x 5⅜" D x 35" H

AEPOSSB5
5⅜" W x 5⅜" D x 35" H

AEPOSSP5
5⅜" W x 5⅜" D x 35" H

AELEGA3
3" W x 3¼" D x 30½" H 10⅝ motif

AELEGA2
3" W x 3¼" D x 26" H 9⅞ motif

Block 15100 Traditional Art Turnings

AEPOSTAC1
3½" W x 3½" D x 34½" H
AEPOSTAC2
4" W x 4" D x 34½" H
AEPOSTAC3
4½" W x 4½" D x 34½" H

AEPOSTGR1
3½" W x 3½" D x 34½" H
AEPOSTGR2
4" W x 4" D x 34½" H
AEPOSTGR3
4½" W x 4½" D x 34½" H

AEPOSTD1
3½" W x 3½" D x 34½" H
AEPOSTD2
4" W x 4" D x 34½" H
AEPOSTD3
4½" W x 4½" D x 34½" H

© Copyright StarMark Cabinetry FEBRUARY 2022

Block 15100 Decorative Accents from Art for Everyday

ART FOR EVERYDAY INC.
Architectural Woodcarvings

DESIGN CONSIDERATIONS
Alder, Cherry, Maple, Oak and Walnut
- Art for Everyday decorative accents are solid wood.

HOW TO ORDER
- There is an extended lead time for Art for Everyday decorative accents.
- POSTS, TURNINGS, LEGS: To modify dimen**sions**, use **ACMOD** in Block 9085. Specify dimensions in special info. Certain dimensions may require vendor approval.
- Pricing P-381-426

Block 15100 Traditional Art Turnings

AEPOSTJF1
3½" W x 3½" D x 34½" H
AEPOSTJF2
4" W x 4" D x 34½" H
AEPOSTJF3
4½" W x 4½" D x 34½" H

AEPOSTB1
3½" W x 3½" D x 34½" H
AEPOSTB2
4" W x 4" D x 34½" H
AEPOSTB3
4½" W x 4½" D x 34½" H

Block 15100 Traditional Art Turnings

AEPOSTF1
3½" W x 3½" D x 34½" H
AEPOSTF2
4" W x 4" D x 34½" H
AEPOSTF3
4½" W x 4½" D x 34½" H

AEPOSTK1
3½" W x 3½" D x 34½" H
AEPOSTK2
4" W x 4" D x 34½" H
AEPOSTK3
4½" W x 4½" D x 34½" H

AEPOSTJ1
3½" W x 3½" D x 34½" H
AEPOSTJ2
4" W x 4" D x 34½" H
AEPOSTJ3
4½" W x 4½" D x 34½" H

AEPOSTR1
3½" W x 3½" D x 34½" H
AEPOSTR2
4" W x 4" D x 34½" H
AEPOSTR3
4½" W x 4½" D x 34½" H

© Copyright StarMark Cabinetry FEBRUARY 2022

Block 15100 Traditional Art Turnings

AEPOSTRPR1
3½" W x 3½" D x 34½" H
AEPOSTRPR2
4" W x 4" D x 34½" H
AEPOSTRPR3
4½" W x 4½" D x 34½" H

AEPOSTRPL1
3½" W x 3½" D x 34½" H
AEPOSTRPL2
4" W x 4" D x 34½" H
AEPOSTRPL3
4½" W x 4½" D x 34½" H

NOTE: Right (RPR) and Left (RPL) posts twist in opposite directions.

AEPOSTA1
3½" W x 3½" D x 34½" H
AEPOSTA2
4" W x 4" D x 34½" H
AEPOSTA3
4½" W x 4½" D x 34½" H

Block 15100 Traditional Art Turnings

AEPOSTG1
3½" W x 3½" D x 34½" H
AEPOSTG2
4" W x 4" D x 34½" H
AEPOSTG3
4½" W x 4½" D x 34½" H

AEPOSTE1
3½" W x 3½" D x 34½" H
AEPOSTE2
4" W x 4" D x 34½" H
AEPOSTE3
4½" W x 4½" D x 34½" H

AEPOSTH1
3½" W x 3½" D x 34½" H
AEPOSTH2
4" W x 4" D x 34½" H
AEPOSTH3
4½" W x 4½" D x 34½" H

© Copyright StarMark Cabinetry FEBRUARY 2022

Block 15100 Decorative Accents from Art for Everyday

I

ART FOR EVERYDAY INC.
Architectural Woodcarvings

DESIGN CONSIDERATIONS
Alder, Cherry, Maple, Oak and Walnut
- Art for Everyday decorative accents are solid wood.

HOW TO ORDER
- There is an extended lead time for Art for Everyday decorative accents.
- POSTS, TURNINGS, LEGS: To modify dimen-**sions**, use **ACMOD** in Block 9085. Specify dimensions in special info. Certain dimensions may require vendor approval.
- Pricing P-381-426

Block 15100 Traditional Art Turnings

I

AEPOSTLF1
3½" W x 3½" D x 34½" H
AEPOSTLF2
4" W x 4" D x 34½" H
AEPOSTLF3
4½" W x 4½" D x 34½" H

AEPOSTL1
3½" W x 3½" D x 34½" H
AEPOSTL2
4" W x 4" D x 34½" H
AEPOSTL3
4½" W x 4½" D x 34½" H

AEPOSTI1
3½" W x 3½" D x 34½" H
AEPOSTI2
4" W x 4" D x 34½" H
AEPOSTI3
4½" W x 4½" D x 34½" H

Block 15100 Traditional Art Turnings

I

AEPOSTM1
3½" W x 3½" D x 34½" H
AEPOSTM2
4" W x 4" D x 34½" H
AEPOSTM3
4½" W x 4½" D x 34½" H

AEPOSTN1
3½" W x 3½" D x 34½" H
AEPOSTN2
4" W x 4" D x 34½" H
AEPOSTN3
4½" W x 4½" D x 34½" H

AEPOSTO1
3½" W x 3½" D x 34½" H
AEPOSTO2
4" W x 4" D x 34½" H
AEPOSTO3
4½" W x 4½" D x 34½" H

© Copyright StarMark Cabinetry FEBRUARY 2022

I available in Inset cabinetry

Block 15100 Modern Classic Turnings

AEPOSTNCA1
5" W x 5" D x 34½" H

AEPOSTNCA2
5" W x 5" D x 34½" H

AEPOSTNCB1
5" W x 5" D x 34½" H

AEPOSTNCB2
5" W x 5" D x 34½" H

Block 15100 Modern Classic Turnings

AEPOSTNCC1
5" W x 5" D x 34½" H

AEPOSTNCC2
5" W x 5" D x 34½" H

AEPOSTNCD1
5" W x 5" D x 34½" H

AEPOSTNCD2
5" W x 5" D x 34½" H

© Copyright StarMark Cabinetry FEBRUARY 2022

Block 15100 Decorative Accents from Art for Everyday

ART FOR EVERYDAY INC.
Architectural Woodcarvings

DESIGN CONSIDERATIONS

Alder, Cherry, Maple, Oak and Walnut

- Art for Everyday decorative accents are solid wood.

HOW TO ORDER

- There is an extended lead time for Art for Everyday decorative accents.
- POSTS, TURNINGS, LEGS: To modify dimen-**sions**, use **ACMOD** in Block 9085. Specify dimensions in special info. Certain dimensions may require vendor approval.
- Pricing P-381-426

Block 15100 Modern Classic Turnings

AEPOSTNCE1
5" W x 5" D x 34½" H

AEPOSTNCE2
5" W x 5" D x 34½" H

AEPOSTNCF1
5" W x 5" D x 34½" H

AEPOSTNCF2
5" W x 5" D x 34½" H

Block 15100 New Art Legs

AELEGR5
5" W X 5" D X 35½" H

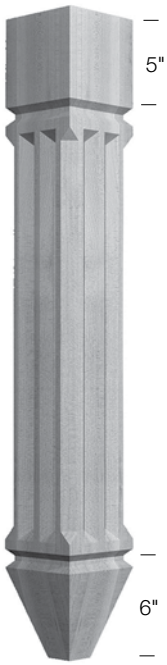

AELEGT5
5" W X 5" D X 35½" H

© Copyright StarMark Cabinetry **FEBRUARY 2022**

Block 15100 New Art Legs

AELEGB5
5” W X 5” D X 35½” H

AELEGD5
5” W X 5” D X 35½” H

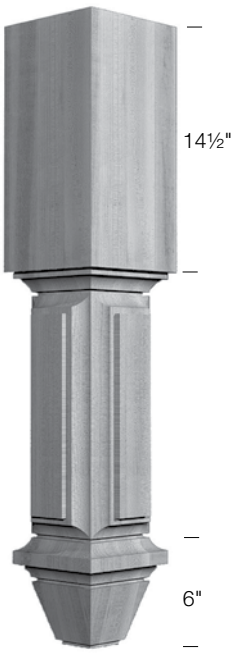

AELEGR7
7” W X 7” D X 35½” H

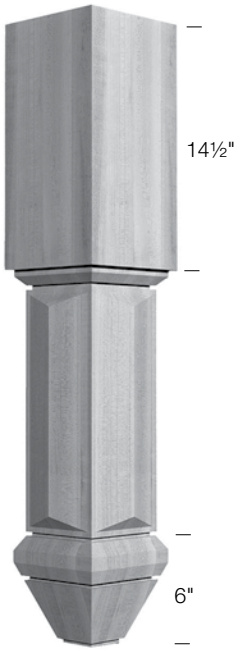

AELEGD7
7” W X 7” D X 35½” H

Block 15100 New Art Italianate Posts

AEPOSIT38
3½” W X 3½” D X 35½” H

AEPOSIT312
3½” W X 3½” D X 35½” H

AEPOSIT318
3½” W X 3½” D X 35½” H

AEPOSIT324
3½” W X 3½” D X 35½” H

© Copyright StarMark Cabinetry FEBRUARY 2022

Block 15100 Decorative Accents from Art for Everyday

I

ART FOR EVERYDAY INC.
Architectural Woodcarvings

DESIGN CONSIDERATIONS

Alder, Cherry, Maple, Oak and Walnut

- Art for Everyday decorative accents are solid wood.

HOW TO ORDER

- There is an extended lead time for Art for Everyday decorative accents.
- POSTS, TURNINGS, LEGS: To modify dimen**sions**, use **ACMOD** in Block 9085. Specify dimensions in special info. Certain dimensions may require vendor approval.
- Pricing P-381-426

Block 15100 New Art Italianate Posts

I

AEPOSIT58
5" W X 5" D X 35½" H

AEPOSIT512
5" W X 5" D X 35½" H

AEPOSIT518
5" W X 5" D X 35½" H

AEPOSIT522
5" W X 5" D X 35½" H

Block 15100 New Art Italianate Posts

I

AEPOSIT79
7" W X 7" D X 35½" H

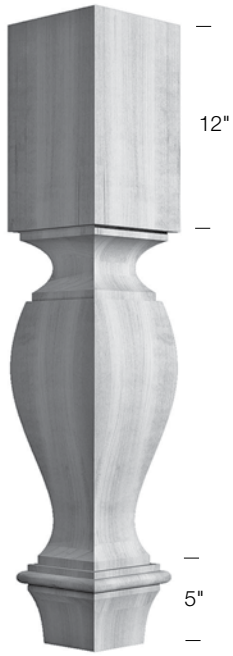

AEPOSIT712
7" W X 7" D X 35½" H

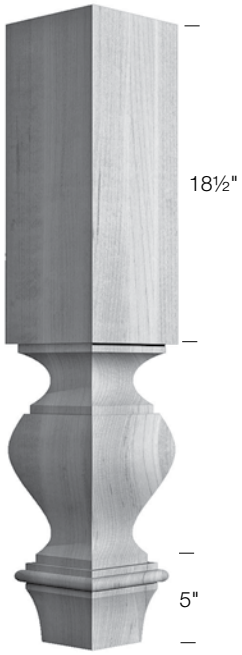

AEPOSIT718
7" W X 7" D X 35½" H

AEPOSIT720
7" W X 7" D X 35½" H

© Copyright StarMark Cabinetry FEBRUARY 2022

Block 15100 New Art Italianate Posts

AEPOSITCR3
3½" W X 3½" D X 35½" H
Two-sided only

AEPOSITCR5
5" W X 5" D X 35½" H
Two-sided only

AEPOSITCR7
7" W X 7" D X 35½" H
Two-sided only

Block 15100 Multiplicity Legs

Wooden
AELORBW29
4½" W x 4½" D x 29½" H
AELORBW35
4½" W x 4½" D x 35½" H
AELORBW41
4½" W x 4½" D x 41½" H

Clear Crystal
AELORBCC29
4½" W x 4½" D x 29½" H
AELORBCC35
4½" W x 4½" D x 35½" H
AELORBCC41
4½" W x 4½" D x 41½" H

Faceted Crystal
AELORBCF29
4½" W x 4½" D x 29½" H
AELORBCF35
4½" W x 4½" D x 35½" H
AELORBCF41
4½" W x 4½" D x 41½" H

© Copyright StarMark Cabinetry FEBRUARY 2022

Block 15100 Decorative Accents from Art for Everyday

ART FOR EVERYDAY INC.
Architectural Woodcarvings

DESIGN CONSIDERATIONS
Alder, Cherry, Maple, Oak and Walnut
- Art for Everyday decorative accents are solid wood.

HOW TO ORDER
- There is an extended lead time for Art for Everyday decorative accents.
- POSTS, TURNINGS, LEGS: To modify dimen**sions**, use **ACMOD** in Block 9085. Specify dimensions in special info. Certain dimensions may require vendor approval.
- Pricing P-381-426

Block 15100 New York Post

AEPOSTNY01
7" W x 7" D x 35½" H

AEPOSTNY02
5" W x 5" D x 35½" H

AEPOSTNY03
5" W x 5" D x 35½" H

AEPOSTNY04
5" W x 5" D x 35½" H

Block 15100 New York Post

AEPOSTNY05
5" W x 5" D x 35½" H

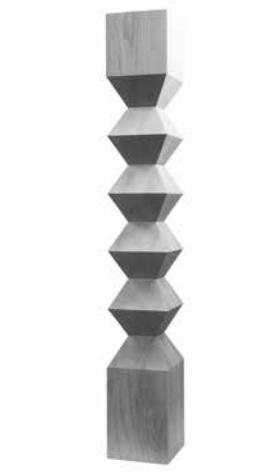

AEPOSTNY06
5" W x 5" D x 35½" H

AEPOSTNI01
5" W x 5" D x 35½" H

AEPOSTNI02
5" W x 5" D x 35½" H

© Copyright StarMark Cabinetry FEBRUARY 2022

Block 15100 New York Post

AEPOSTNI03
5" W x 5" D x 35½" H

AEPOSTNI04
5" W x 5" D x 35½" H

AEPOSTNI05
5" W x 5" D x 35½" H

AEPOSTNI06
5" W x 5" D x 35½" H

AEPOSTNI07
5" W x 5" D x 35½" H

Block 15100 Traditional Art Capitals

AECPLA3
9½" W x 4⅞" D x 10" H

AECPLA4
9¼" W x 3" D x 5⅞" H

AECPLA2
6¼" W x 1⅞" D x 6¼" H

AECPLA1
5" W x 1½" D x 5¼" H

AECPLED4
8⅝" W x 1¾" D x 6⅛" H

© Copyright StarMark Cabinetry FEBRUARY 2022

Block 15100 Decorative Accents from Art for Everyday

I

ART FOR EVERYDAY INC.
Architectural Woodcarvings

DESIGN CONSIDERATIONS
Alder, Cherry, Maple, Oak and Walnut
- Art for Everyday decorative accents are solid wood.
- Column components are sold separately and are not assembled.
- See example below.

HOW TO ORDER
- There is an extended lead time for Art for Everyday decorative accents.
- Pricing P-381-426

Column
example

Capital
AECPLNCE

Sub-capital
AESCPLPBL
Applique
AEAPLPL1

Pilaster
AEPSSTL2

Column Base
AEBSNCT3

CAPITAL

Capitals and corbels form the top part of the column. Select pieces from the Modern Classic Collection to create small, medium and large columns.

SUB-CAPITAL

Sub-capitals are used to complete column design. Several Sub-capitals with flat facing can be embellished with your choice of decorative appliqué or rosettes. You can add one or more Sub-capitals to the column depending on the look you are trying to achieve.

PILASTER

Three pilaster sizes with varying configurations and four selections in texture, pattern and style establish the length of the large column. Heights are available in 42” and 91”. The hand-chiseled and hand-stippled textures are shown below.

Hand-chiseled pilaster

Hand-stippled pilaster

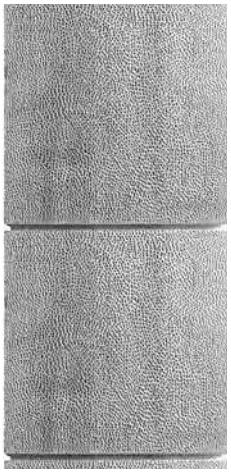

COLUMN BASE

© Copyright StarMark Cabinetry FEBRUARY 2022

Block 15100 Column Capitals

AECPLGK
15¾" W x 7⅞" D x 6¼" H

AECPLGRI
13½" W x 6¾" D x 6½" H

AECPLGR
10¼" W x 6½" D x 6½" H

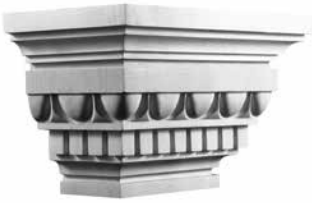

AECPLNCE
12¾" W x 6¾" D x 7½" H

AECPLNCM
8¾" W x 5⅛" D x 7½" H

AECPLNCS
6¾" W x 3⅝" D x 7½" H

Block 15100 Column Sub-Capitals

AESCPLGK
8¼" W x 4¼" D x 7" H

AESCPLNCT
7⅝" W x 4" D x 6⅞" H

AESCPLADA1
7¼" W x 4" D x 3¾" H

AESCPLADA2
7½" W x 4" D x 3½" H

Block 15100 Column Sub-Capitals

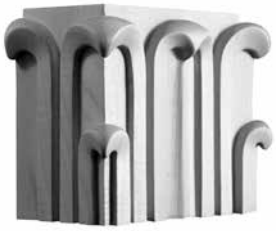

AESCPLADA3
7¾" W x 4" D x 6" H

AESCPLADA4
7¾" W x 4" D x 5¾" H

AESCPLADD
7¼" W x 4" D x 1⅞" H

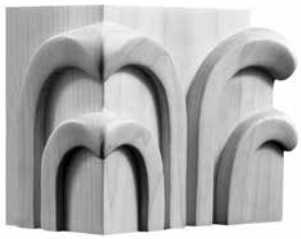

AESCPLAD
6⅛" W x 3¾" D x 4½" H

Block 15100 Column Base

AEBSNCT3
10" W x 5" D x 8¾" H

AEBSNCT2
7⅝" W x 4½" D x 8¾" H

AEBSNCT1
4½" W x 2⅝" D x 8¾" H

© Copyright StarMark Cabinetry FEBRUARY 2022

Block 15100 Decorative Accents from Art for Everyday

I

ART FOR EVERYDAY INC.
Architectural Woodcarvings

DESIGN CONSIDERATIONS
Alder, Cherry, Maple, Oak and Walnut
- Art for Everyday decorative accents are solid wood.
- Column components are sold separately and are not assembled.

HOW TO ORDER
- There is an extended lead time for Art for Everyday decorative accents.
- Pricing P-381-426

Block 15100 Column Pilasters

I

AEPLSFL1
6⅛" W x 3¼" D x 42" H
AEPLSFL2
6⅛" W x 3¼" D x 91" H
AEPLSFM1
4½" W x 3" D x 42" H
AEPLSFM2
4½" W x 3" D x 91" H
AEPLSFS1
2½" W x 1⅝" D x 42" H
AEPLSFS2
2½" W x 1⅝" D x 91" H

AEPLSPL1
6⅛" W x 3¼" D x 42" H
AEPLSPL2
6⅛" W x 3¼" D x 91" H
AEPLSPM1
4½" W x 3" D x 42" H
AEPLSPM2
4½" W x 3" D x 91" H
AEPLSPS1
2½" W x 1⅝" D x 42" H
AEPLSPS2
2½" W x 1⅝" D x 91" H

Block 15100 Column Pilasters

I

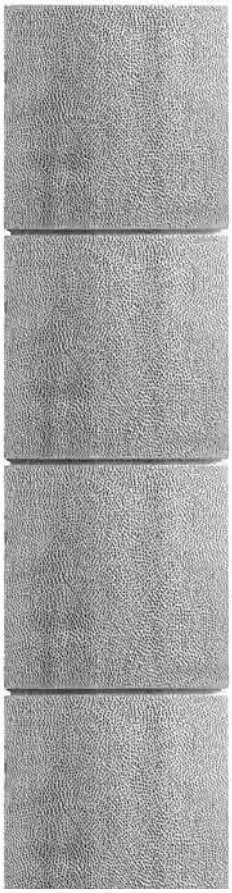

AEPLSCHL1
6⅛" W x 3¼" D x 42" H
AEPLSCHL2
6⅛" W x 3¼" D x 91" H
AEPLSCHM1
4½" W x 3" D x 42" H
AEPLSCHM2
4½" W x 3" D x 91" H
AEPLSCHS1
2½" W x 1⅝" D x 42" H
AEPLSCHS2
2½" W x 1⅝" D x 91" H

AEPLSSTL1
6⅛" W x 3¼" D x 42" H
AEPLSSTL2
6⅛" W x 3¼" D x 91" H
AEPLSSTM1
4½" W x 3" D x 42" H
AEPLSSTM2
4½" W x 3" D x 91" H
AEPLSSTS1
2½" W x 1⅝" D x 42" H
AEPLSCHS2
2½" W x 1⅝" D x 91" H

© Copyright StarMark Cabinetry FEBRUARY 2022

I available in Inset cabinetry

Block 15100 Traditional Art Vanity Skirts

AEVANK2 (MOTIF 24" L)
60" L x 4½" H x ¾" T

AEVANK1
44" L x 4½" H x ¾" T
(MOTIF 16" L)

AEVANKEXT
44" L x 4½" H x ¾" T

AEVANVM3 (MOTIF 24" L)
72" L x 7¾" H x 1⅜" T

AEVANV3 (MOTIF 24" L)
72" L x 6" H x 1⅜" T

AEVANEXT2
48" L x 3" H x ⅞" T

AEVANBA (MOTIF 24" L)
72" L x 3½" H x 1¼" T

AEVANBO (MOTIF 26½" L)
72" L x 3⅜" H x 1¼" T

Block 15100 Traditional Art Vanity Skirts

AEVANEXT1
48" L x 2½" H x ¾" T

AEVANWBA (MOTIF 29½" L)
60" L x 6½" H x 1⅜" T

AEVANWBO (MOTIF 26½" L)
60" L x 7" H x 1⅜" T

Block 15100 Traditional Art Bun Feet

AEBUNA8
2⅝" DIA x 8" H

AEBUNA7
2⅝" DIA x 7" H

AEBUNA6
2⅝" DIA x 6" H

AEBUNA5
2⅝" DIA x 5" H

AEBUNA42
2⅝" DIA x 4½" H

AEBUNA4
2⅝" DIA x 4" H

© Copyright StarMark Cabinetry FEBRUARY 2022

Block 15100 Decorative Accents from Art for Everyday

DESIGN CONSIDERATIONS

Alder, Cherry, Maple, Oak and Walnut

- Art for Everyday decorative accents are solid wood.
- Column components are sold separately and are not assembled.

HOW TO ORDER

- There is an extended lead time for Art for Everyday decorative accents.
- Pricing P-381-426

Block 15100 Traditional Art Bun Feet

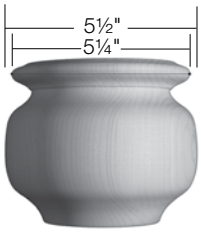

AEBUNF2
5½" DIA x 4½" H

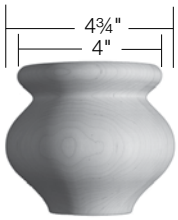

AEBUNF1
4¾" DIA x 4" H

AEBUNR2
3½" DIA x 5" H

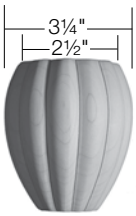

AEBUNR1
3¼" DIA x 4" H

Block 15100 Traditional Art Spools & Half Rounds

AESPL0
1¾" W x 2½" H x ⅞" D pair

AEBSPL08
2" W x 1" D x 7½" H pair

AESPL1
2¼" W x 3" H x 1⅛" D pair

AEBSPL18
2½" W x 1¼" D x 8" H pair

AESPL2
2¾" W x 3" H x 1⅜" D pair

AEBSPL28
3" W x 1½" D x 8" H pair

© Copyright StarMark Cabinetry FEBRUARY 2022

Block 15100 Traditional Art Spools & Half Rounds

AEHBR0
1¾" W x 7½" H x ⅞" D pair

AEBSPL012
2" W x 1" D x 11½" H pair

AEHBR1
2" W x 7½" H x 1" D pair

AEBSPL112
2½" W x 1¼" D x 12" H pair

AEHBR2
2½" W x 7½" H x 1¼" D pair

AEBSPL212
3" W x 1½" D x 12" H pair

Block 15100 Traditional Art Spools & Half Rounds

AEHRR0
1¼" W x ⅝" D x 96" H

AEHRR1
1½" W x ¾" D x 96" H

AEHRR2
2" W x 1" D x 96" H

© Copyright StarMark Cabinetry FEBRUARY 2022

Block 15100 Traditional Art Spools & Half Rounds I

AEHR0
1¼" W x ⅝" D x 96" H

AEHR1
1½" W x ¾" D x 96" H

AEHR2
2" W x 1" D x 96" H

© Copyright StarMark Cabinetry **FEBRUARY 2022**

THIS PAGE INTENTIONALLY LEFT BLANK

© Copyright StarMark Cabinetry FEBRUARY 2022

THIS PAGE INTENTIONALLY LEFT BLANK

© Copyright StarMark Cabinetry FEBRUARY 2022

Block 16000 Touch Up Material

DESIGN CONSIDERATIONS

- Material is available for field touch up on all finish types: stain, stain with glaze, tinted varnish, tinted varnish with glaze and top coat.
- We ship instructions with finish material, and we recommend using a professional for any finishing task that is beyond a basic touch up.
- The technique and equipment you use when field applying the finish will determine the outcome of the finished color.
- We are not responsible for the look and color of finishes applied outside of our factory. Our warranty does not cover finishes that are applied outside of our factory.
- When ordering quarts and gallons and shipping via FedEx, additional hazardous material charges will apply.
- Please note, all the items listed in Block 16000 are classified by carriers as hazardous material, and they will not ship this material to residential addresses. There are three approved destinations for this material: your showroom, your warehouse, and to a job site as part of a complete cabinetry order delivered by truck. We cannot ship this material to a homeowner or to your home.

HOW TO ORDER

- Specify the exact finish. We will send you the finish material we use to achieve that color in our factory. The finish material is outlined below.
- Order top coat material separately.
- Our Customer Service staff will replace the ** with the correct code to match the color on your cabinetry order form cover sheet.
- Catalyst items cannot be shipped air
- Pricing P-427

WHEN YOU ORDER QUARTS AND GALLONS

If the finish you order is a:	You will receive this finish material:
Stain	Stain (quart or gallon). You may also receive toner (quart or gallon), if we use toner at the factory to achieve that color.
Stain with Glaze	Stain (quart or gallon) and glaze (quart or gallon). you may also receive toner (quart or gallon), if we use toner at the factory to achieve that color.
Tinted Varnish	Primer (quart or gallon), enamel (quart or gallon) and catalyst
Tinted Varnish with Glaze	Primer (quart or gallon), enamel (quart or gallon), glaze (quart or gallon) and catalyst
Top Coat	Top coat (quart or gallon), sealer (quart or gallon) and catalyst
Glaze	Glaze (quart or gallon)

TOUCH UP MATERIAL FOR STAIN AND STAIN WITH GLAZE

Our Customer Service staff will replace the ** with the correct code to match the color on your cabinetry order form cover sheet.

QTSN**	one quart each of stain and toner (if needed)
GALSN**	one gallon each of stain and toner (if needed)
QTSG**	one quart each of stain, toner (if needed) and glaze
GALSG**	one gallon each of stain, toner (if needed) and glaze
PTY	one putty stick, to fill nicks and nail holes
TUP	touch up pen, for minor color touch up
TUP-GZ	one touch up pen for glaze, for minor glaze touch up

Block 16000 Touch Up Material continued

TOUCH UP MATERIAL FOR TINTED VARNISH AND TINTED VARNISH WITH GLAZE

Our Customer Service staff will replace the ** with the correct code to match the color on your cabinetry order form cover sheet.

QTTV**	one quart each of primer and enamel tinted varnish, plus catalyst
GALTV**	one gallon each of primer and enamel tinted varnish, plus catalyst
QTTVG**	one quart each of primer, enamel tinted varnish and glaze, plus catalyst
GALTVG**	one gallon each of primer, enamel tinted varnish and glaze, plus catalyst
PTY-TV	one putty stick for tinted varnish, to fill nicks and nail holes
TUB-TV	one 3-oz bottle for tinted varnish, for minor finish touch up
TUP-TV	one touch up pen for tinted varnish, for minor color touch up
TUP-GZ	one touch up pen for glaze, for minor glaze touch up
SPYCAN12	one 7.6 oz. aerosol can of tinted varnish, for minor finish touch up

TOP COAT

QTTOPCOAT	one quart each of sealer and top coat, plus catalyst
GALTOPCOAT	one gallon each of sealer and top coat, plus catalyst
TOPCOAT	one 7.6 oz. spray can, for minor finish touch up

GLAZE

QTCHOGZ	one quart of Chocolate glaze
GALCHOGZ	one gallon of Chocolate glaze
QTEBYGZ	one quart of Ebony glaze
GALEBYGZ	one gallon of Ebony glaze
QTNICGZ	one quart of Nickel glaze
GALNICGZ	one gallon of Nickel glaze
QTLATGZ	one quart of Latte glaze
GALLATGZ	one gallon of Latte glaze

Block 16010 Custom Quotes

Call Technical Assistance at 800.551.3404 for custom quotes on items not listed in this catalog. Some examples are:

- Custom Hoods
- Custom Mantels
- Media Cabinets
- Custom Vanities

Use the Custom Quote order form (found in the Order Form section) to organize the details of your quote.

© Copyright StarMark Cabinetry MARCH 2021

Block 16500 Finish and Species Upcharge I

- Information on the items listed below is also in the Cabinetry Specifications section in the front of this catalog.

HOW TO ORDER AN UPCHARGED FINISH

- Specify the FINISH in the FINISH box, found on the first page of the Cabinetry order form
- Specify the finish as a separate line item
- To price, apply the upcharge to the entire order. Upcharges are listed below.

✪ We highly recommend reviewing the Finish Expectations form with your customer when they specify these finishes: Java, Glazes, Tinted Varnish, Villa, Amaretto, Antiquity, Chateaux, Homestead, Cottage and Old World Distressing.

HOW TO ORDER SPATTERING or DISTRESSING

- Check SPATTERING or DISTRESSING in the STYLING OPTIONS box, found on the first page of the Order Form.
- Specify SPATTERING or DISTRESSING as a separate line item
- To price, apply the upcharge to the entire order

HOW TO ORDER A RUSTIC SPECIES

- Specify the rustic door style on the front page of the order form
- To price, apply the applicable upcharge to the entire order

✪ We highly recommend reviewing the Finish Expectations form with your customer when they specify Rustic Alder or Rustic Hickory.

- Pricing P-427

Item	Upcharge	Species
Tinted Varnish	5%	Maple, Oak, Quarter Sawn Oak
Tinted Varnish with Glaze	15%	Maple, Oak, Quarter Sawn Oak
Stain with Glaze	10%	All
Matte Top Coat	5%*	All
Spattering	10%	All
Light Chain Distressing	10%	All
Old World Distressing	15%	All
Antiquity	15%	Alder, Rustic Alder
Chateaux	15%	Cherry
Homestead	15%	Alder, Rustic Alder
Amaretto	15%	Maple
Cottage on Stain with Glaze	15%	All
Cottage on Tinted Varnish with Glaze	15%	Maple, Oak, Quarter Sawn Oak
Villa	15%	Maple
Weathered/Weathered Snow	15%	Oak

Block 16500 Finish and Species Upcharge continued I

Item	Upcharge	Species
Custom Tinted Varnish	15%†	Maple, Oak, Quarter Sawn Oak
Custom Tinted Varnish with Glaze	25%†	Maple, Oak, Quarter Sawn Oak
Custom Cottage on Tinted Varnish with Glaze	25%†	Maple, Oak, Quarter Sawn Oak
Custom Old World on Tinted Varnish with Glaze	25%†	Maple, Oak, Quarter Sawn Oak
Custom Stain	10%†	All
Custom Stain with Glaze	25%†	All
Custom Cottage on Stain with Glaze	25%†	All
Custom Old World on Stain with Glaze	25%†	All
Custom Antiquity	25%†	Alder, Rustic Alder
Custom Chateaux	25%†	Cherry
Custom Homestead	25%†	Alder, Rustic Alder
Custom Villa	25%†	Maple
Custom Weathered /Weathered Snow	25%†	Oak

Rustic Alder	No charge
Rustic Hickory	No charge
Walnut	25%

*There is no upcharge for Matte Top Coat on a Stain with Glaze, or on any finish with an upcharge already applied. Available on Stain-based finishes only.

† Additional fees for custom finishes. See Cabinetry Specifications for details.

© Copyright StarMark Cabinetry MARCH 2021